PARTS LIST

Ref. NO.	DESCRIPTION	NO. REQUIRED						PART NO.
		1461	1462	1463	1485	1486	1487	
1	Top Clevis	1	0	0	0	0	0	157000
1	Top Clevis	1	1	0	0	0	0	157002
1	Top Clevis	0	0	1	0	0	0	157382
1	Top Clevis	0	0	0	1	0	0	158223
1	Top Clevis	0	0	0	0	1	0	158221
1	Top Clevis	0	0	0	0	0	1	157005
2	Bottom Clevis	1	0	0	0	0	0	157011
2	Bottom Clevis	0	1	0	0	0	0	157012
2	Bottom Clevis	0	0	1	0	0	0	157383
2	Bottom Clevis	0	0	0	1	0	0	158233
2	Bottom Clevis	0	0	0	0	1	0	158230
2	Bottom Clevis	0	0	0	0	0	1	157013
3	Swing Pendulum	1	1	1	1	1	1	157010
4	3/8" x 2" Carriage Bolt	2	2	0	2	2	0	800256
4	3/8" x 1-3/4" Carriage Bolt	0	0	2	0	0	2	800290
5	3/8" Lock Nut	2	2	2	2	2	2	804353
6	3/8" x 1" Shoulder Bolt	1	1	1	1	1	1	811226
7	1/2" x 2-1/2" Hex Bolt	1	1	1	1	1	1	801200
8	1/2" Lockwasher	1	1	1	1	1	1	817342
9	1/2" Hex Nut	1	1	1	1	1	1	804055

Unless otherwise specified, all units of measure are each.
Note: Loctite (supplied by others) should be used on all threaded hardware.

PRIME TIME

GameTime — A PLAYCORE COMPANY

Enriching Childhood Through Play.

1-800-235-2440

ISSUED/REVISED: 7/30/18

12583 ADA PRIMETIME SWING

= INSTALLATION DETAIL

= PARTS LIST REFERENCE

NOTE: 12583 FREESTANDING
12584 ADD-A-BAY

TOPRAIL DIMENSIONS	
DIM. A	2'-10 5/8" [87.95cm]
DIM. B	2'-2" [66.04cm]
DIM. C	1'-10 3/4" [57.78cm]

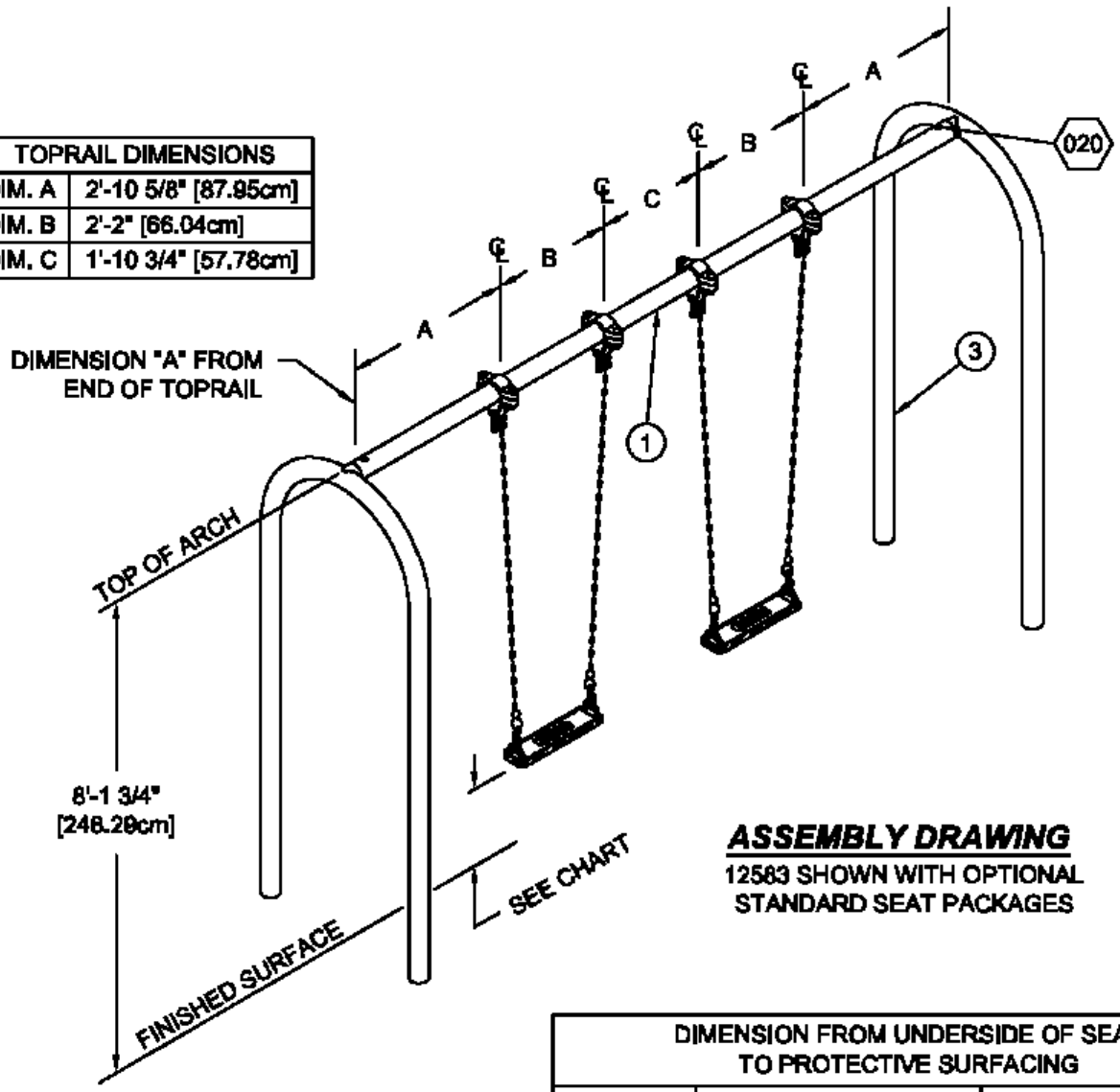

ASSEMBLY DRAWING

12583 SHOWN WITH OPTIONAL STANDARD SEAT PACKAGES

DIMENSION FROM UNDERSIDE OF SEAT TO PROTECTIVE SURFACING		
STANDARD	MIN.	MAX.
*CANADIAN	300mm [11.81"]	N/A
ASTM	12" [305mm]	N/A
BS EN	350 mm [13.77"]	N/A
CPSC	12" [305mm]	N/A

* UNDER LOADED CONDITION BASED ON WEIGHT OF 165lb. [75kg.]

NOTE: SWING SEAT PACKAGES SHOWN ON ASSEMBLY DRAWINGS NOT INCLUDED. SHOWN FOR ILLUSTRATION ONLY.

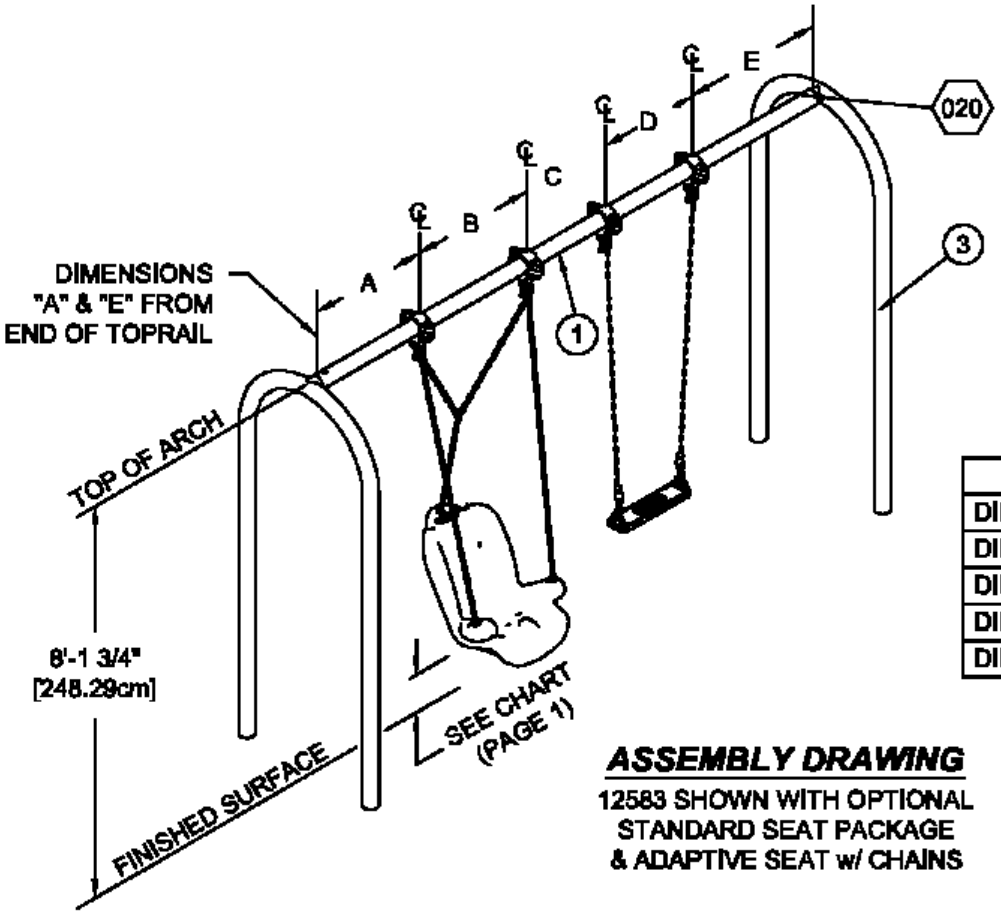

TOPRAIL DIMENSIONS	
DIM. A	2'-5" [73.66cm]
DIM. B	2'-8" [81.28cm]
DIM. C	1'-10 3/8" [56.83cm]
DIM. D	2'-2" [66.04cm]
DIM. E	2'-10 5/8" [87.95cm]

ASSEMBLY DRAWING

12583 SHOWN WITH OPTIONAL
STANDARD SEAT PACKAGE
& ADAPTIVE SEAT w/ CHAINS

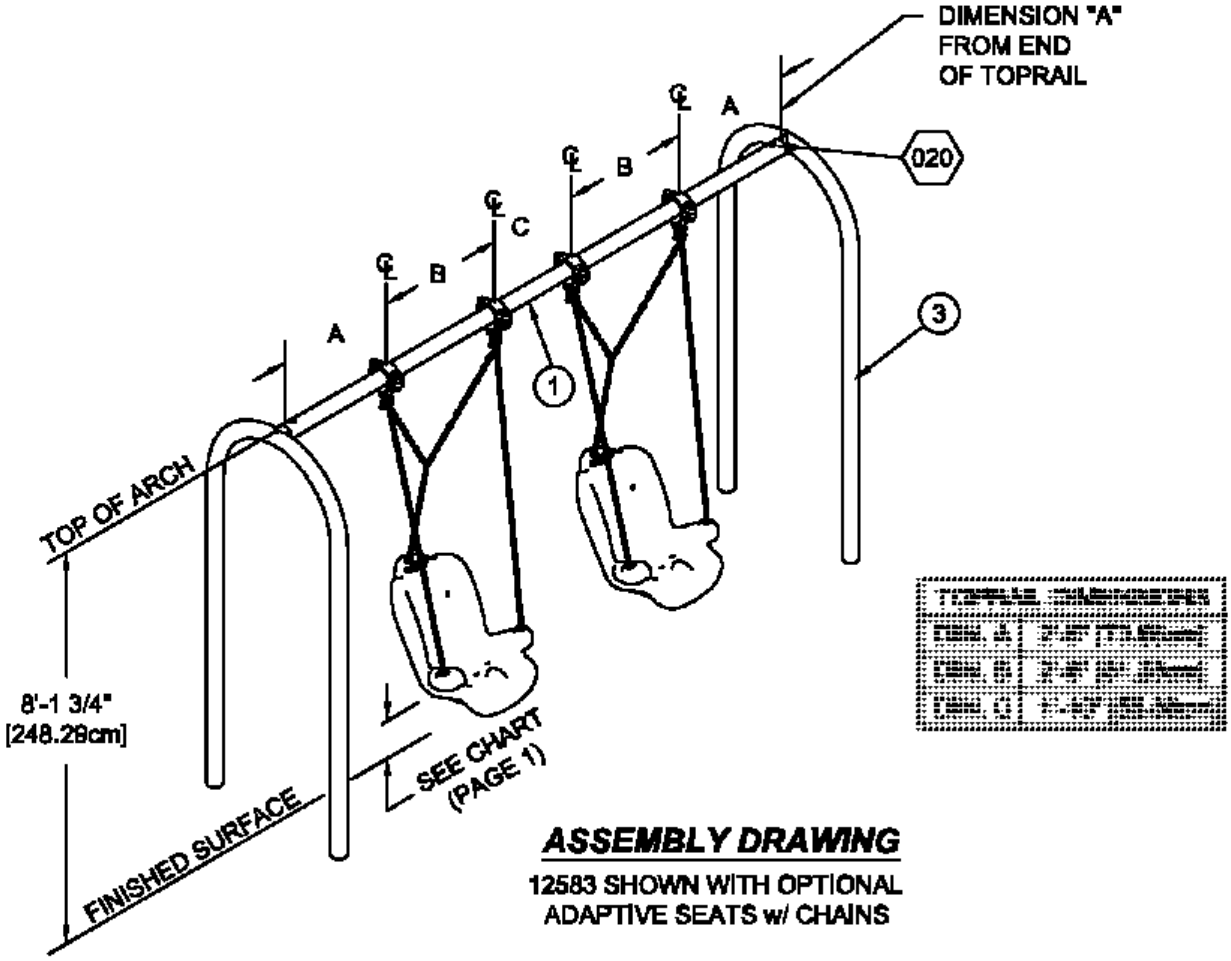

ASSEMBLY DRAWING

12583 SHOWN WITH OPTIONAL
ADAPTIVE SEATS w/ CHAINS

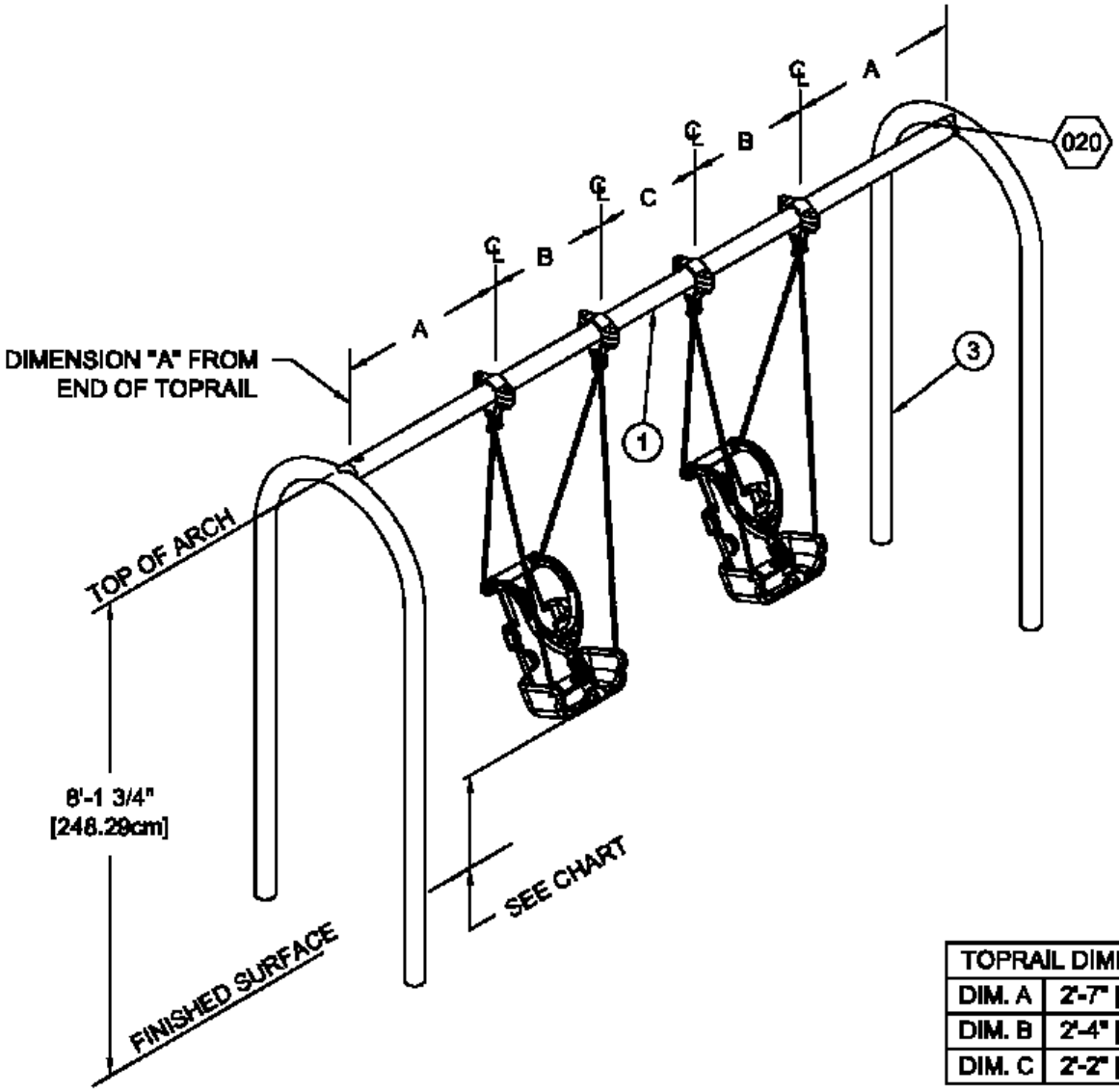

TOPRAIL DIMENSIONS	
DIM. A	2'-7" [78.74cm]
DIM. B	2'-4" [71.12cm]
DIM. C	2'-2" [66.04cm]

ASSEMBLY DRAWING

12583 SHOWN WITH OPTIONAL
ZERO-G CHAIRS

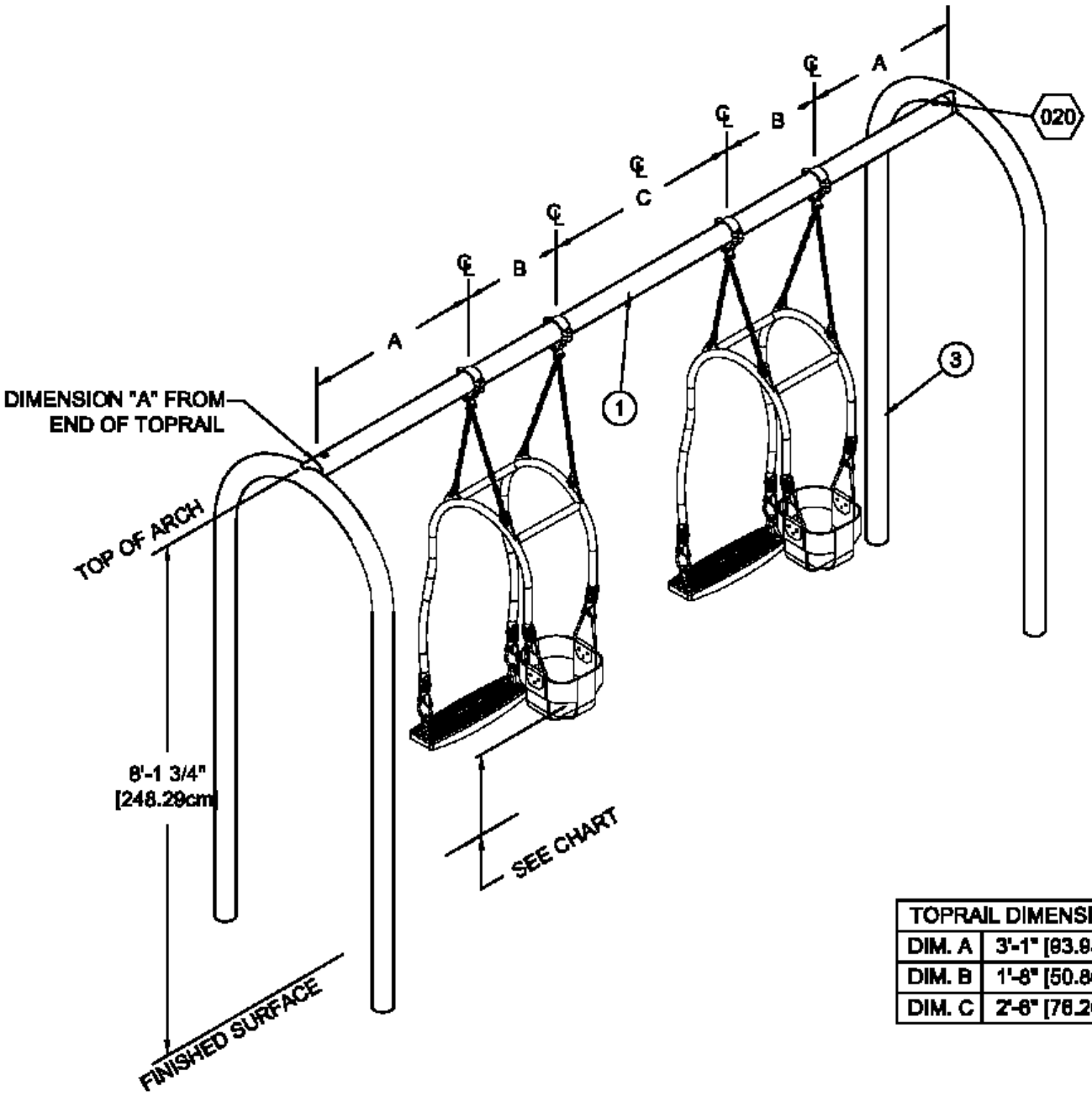

TOPRAIL DIMENSIONS	
DIM. A	3'-1" [93.98cm]
DIM. B	1'-8" [50.80cm]
DIM. C	2'-6" [76.20cm]

ASSEMBLY DRAWING

12583 SHOWN WITH OPTIONAL
EXPRESSION SWINGS

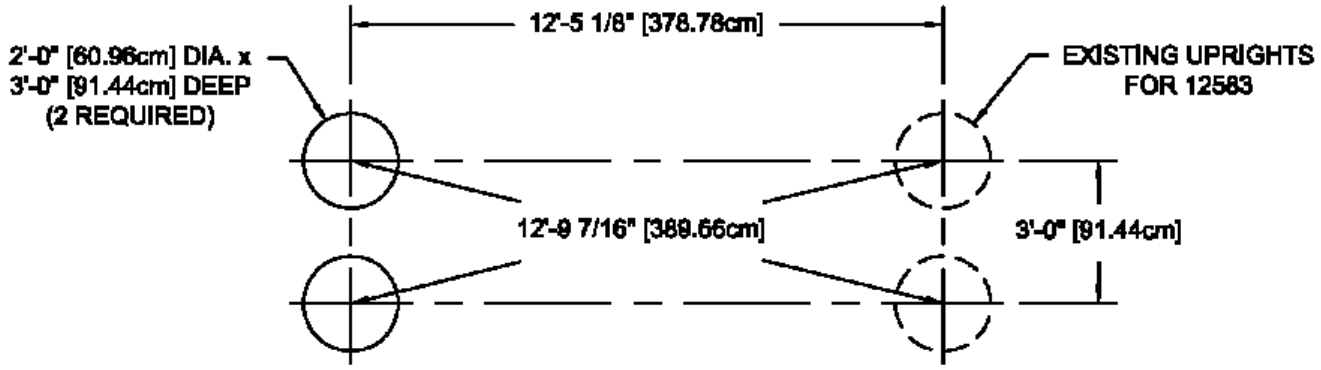

GROUND PLAN

NOTE: Hole depths indicated on all ground plans are measurd from the finished surface. See Detail 005. All footing dimensions are based on level finished surface.

Concrete Required - 12583:
.92 Cubic Yards
[.70 Cubic Meters]

Concrete Required - 12583/12584:
1.38 Cubic Yards
[1.06 Cubic Meters]

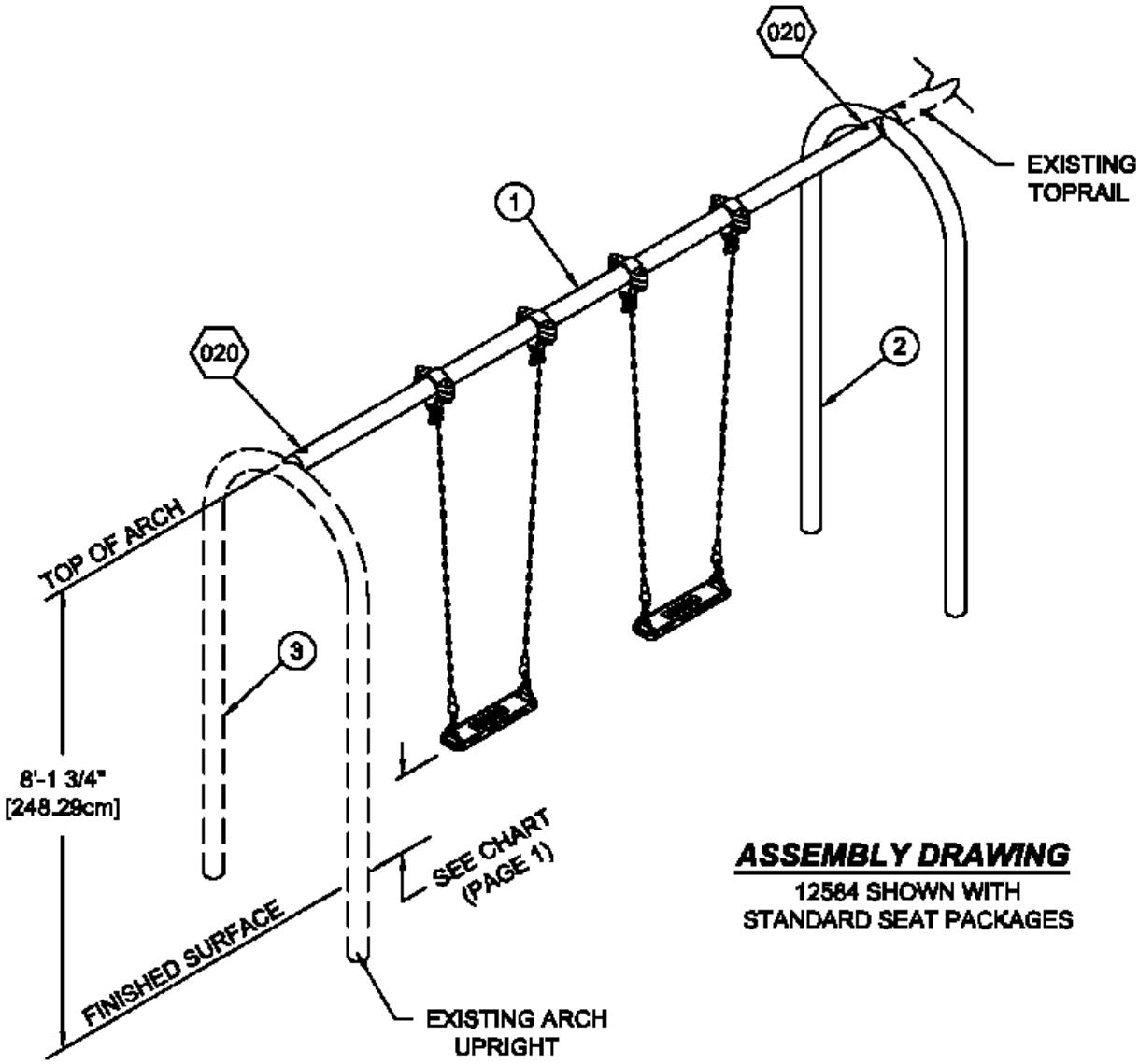

ASSEMBLY DRAWING

12584 SHOWN WITH
STANDARD SEAT PACKAGES

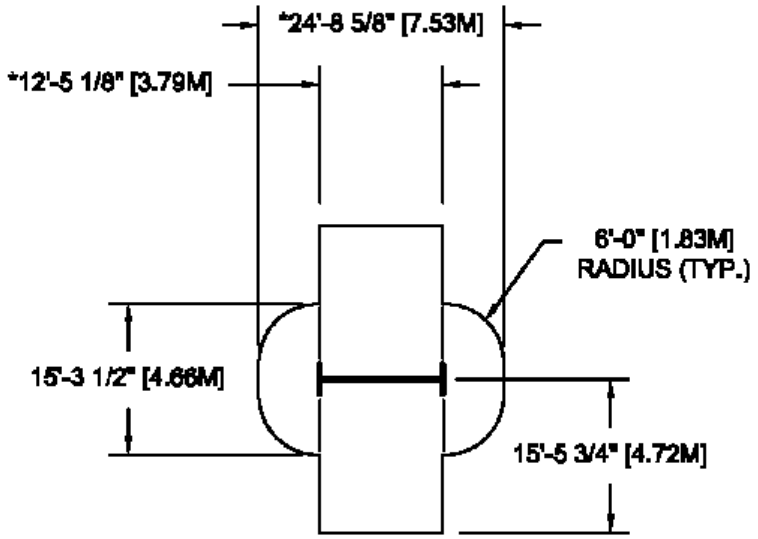

TOP VIEWS

12583

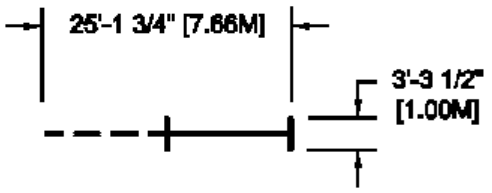

12584

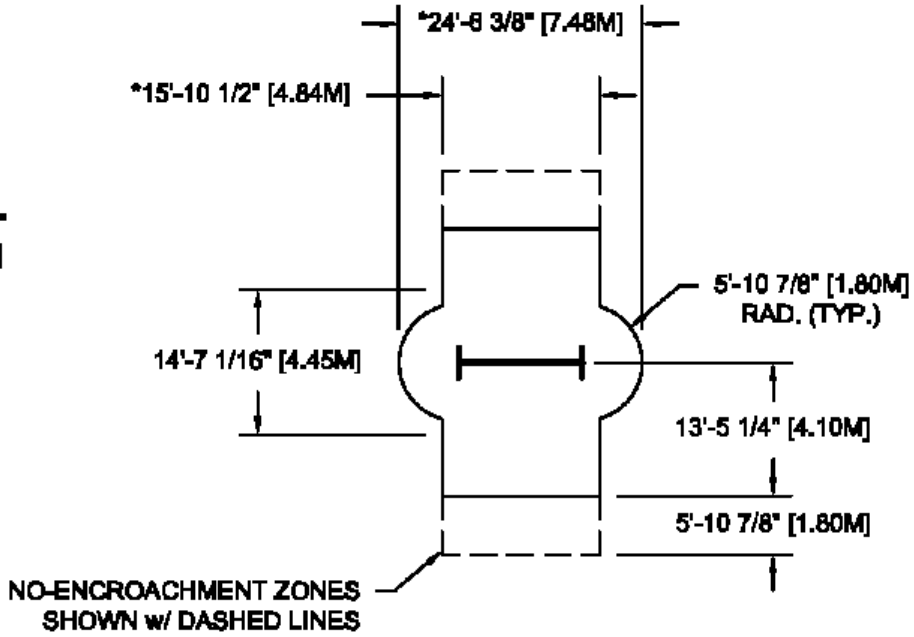

12583 (CSA ONLY)

NOTE:

1. OWNER/OPERATOR SHALL INSTALL AND MAINTAIN PROTECTIVE SURFACING WITHIN THE USE ZONE (U.S.) OR PROTECTIVE SURFACING ZONE (CANADA) OF ALL PLAY EQUIPMENT TO COMPLY WITH ASTM F-1292 AND ASTM F-1487 (U.S.) or CAN/CSA-Z-614 (CANADA).
2. SOLID OUTSIDE BORDER REPRESENTS MINIMUM REQUIRED ASTM USE ZONE AND CSA PROTECTIVE SURFACING ZONE FOR SWING FRAME SHOWN.
3. DASHED LINES REPRESENT CSA *NO ENCROACHMENT* ZONE (CANADA ONLY).
4. *EACH ADDITIONAL CONNECTED SWING FRAME BAY INCREASES THE USE ZONE SURFACING, AND *NO ENCROACHMENT* ZONE DIMENSIONS BY 12'-5 1/8" [3.79M].

SPECIFICATIONS

TOPRAIL AND ARCH: Shall be fabricated of 3-1/2" O.D. (11 Gauge) galvanized steel tubing. Arch includes a welded 3-1/8" O.D. galvanized steel sleeve to which the toprail is fastened.

FINISH: Shall be an electrostatically applied custom formula of TGIC polyester powder with baked finish. Specify color desired.

HARDWARE: All nuts, bolts, screws, inserts, and lockwashers used in the assembly of all play equipment, shall be stainless steel, yellow dichromate plated steel, blue-coat plated steel, mechanically galvanized or powder coated/yellow dichromate plated steel. All primary fasteners shall be 300 series stainless steel. Fasteners with yellow dichromate treatment have an electro-deposited, 99.9% pure zinc substrate applied from a specially formulated solution sealed with a yellow dichromate top coat designed to work in conjunction with the zinc plating. Yellow dichromate has a 320% longer life to white corrosion and 275% longer to red corrosion than does hot-dip galvanizing.

SPECIFICATIONS: GAMETIME® has a policy of continuous improvement and reserves the right to change specifications without notice.

STOP IMPORTANT PRODUCT INFORMATION AND SAFETY WARNINGS STOP

☐ All equipment should be installed on a soft, resilient, energy-absorbing ground surface. NEVER INSTALL PLAY EQUIPMENT ON CONCRETE OR ASPHALT. A fall on a hard surface can result in serious injury to the equipment user.

☐ ALWAYS FOLLOW INSTALLATION INSTRUCTIONS WHEN ERECTING EQUIPMENT.

☐ Worn surfaces around equipment should be restored. Concrete footings should never be exposed. Surface depth should comply with installation instructions.

☐ Equipment should be placed to eliminate conflicting traffic patterns.

☐ To reduce risk of clothing entanglement in compliance with ASTM F1487, any bolt end protruding more than two full threads beyond the face of the nut shall be cut-off, filed smooth and treated to prevent corrosion. Sharp edges on pipes should be capped or removed. Check for bent, broken or severely worn pipe and replace.

☐ Test overall stability and rigidity of all play equipment. Check for proper assembly, installation and ground anchoring.

☐ Check for and repair damage caused by wear or vandalism, a major factor in injury-causing situations.

☐ GAMETIME® PROVIDES ITS CUSTOMERS WITH COMPLETE INSTALLATION SHEETS AND INSTALLATION INSTRUCTIONS. THE INSTALLATION SHEET CONTAINS THE LISTING OF EVERY PART USED IN A PIECE OF EQUIPMENT AND SHOULD BE KEPT IN THE CUSTOMER'S FILES FOR ACCURATE REFERENCE WHEN REPLACEMENT PARTS ARE NEEDED.

☐ Never add components not intended for use with this product.

☐ Regular maintenance is necessary on this and all park and recreational equipment to ensure the safety of the user.

☐ Proper maintenance of GAMETIME® equipment requires regular tightening of all bolts, nuts, and set screws.

☐ All equipment should be free of rust and repainted whenever necessary to deter rusting.

☐ Regular checking of all parts, castings, etc., should be made. If a part is broken or worn it should be replaced immediately.

☐ Replace all worn S-Hooks. S-Hooks must be completely closed. To close S-Hooks properly, use GAMETIME® S-Hook Pliers. Failure to close S-Hooks properly can result in serious injury to the user. Never reuse S-Hooks.

☐ Test for free movement of swing hanger and other moving attached parts.

☐ Check for worn chains and replace them.

☐ Replace worn or damaged seats.

☐ A soft, resilient surface should be placed under all swings, extending at least six feet beyond the farthest arc of the swing seat, both front and back. NEVER INSTALL PLAY EQUIPMENT ON CONCRETE OR ASPHALT.

INSTALLATION INSTRUCTIONS

NOTE: THIS INSTALLATION BOOKLET SHOULD BE KEPT IN CUSTOMER'S FILE FOR FUTURE REFERENCE.

NOTE: Do not overtighten bolts. To overtighten may cause buckling or dimpling of some parts.

NOTE: Read installation instructions thoroughly before starting assembly. Pour concrete only after final assembly is complete. Bracing material may be required during assembly.

NOTE: Do not tighten any nuts, bolts, rods, etc. until the unit is completely assembled.

NOTE: Due to extremes in weather and soil conditions, hole sizes may have to be increased to meet local conditions.

NOTE: It is important to check the hole location in the upright and on the drawings while assembling this unit.

STEP 1: Dig holes according to the Ground Plan (see Detail 005 also). Place a brick or equivalent at the bottom of the hole to provide a solid foundation. Allow for this in hole depth (see Detail 005).

STEP 2: Insert toprail onto socket on the arch and secure with 1/2" x 4" hex head bolt, 1/2" flatwasher, 1/2" lockwasher and 1/2" hex nut. Bolt head should recess inside oversize hole as shown in Detail 020.

STEP 3: Set frame in holes, making sure that legs rest on foundation bricks. Check to ensure swing is level.

STEP 4: Fill holes with concrete per Detail 005. Plumb and brace assembly. Allow a minimum of 48 hours for concrete to harden before continuing.

NOTE: Loctite (supplied by others) should be used on all threaded hardware.

STEP 5: Place swing hangers on toprail using Assembly Drawing for spacing. Hang seats per Installation Sheet for swing seats.

STEP 6: After assembly is complete, place manufacturer's I.D. label in a visible location.

PARTS LIST

REF. NO.	DESCRIPTION	NO. REQ'D 12583	NO. REQ'D 12584	PART NUMBER
1	3-1/2" O.D. Toprail	1	1	168622
2	Multi-Bay Arch Upright Ass'y	0	1	152805
3	Arch End Upright Ass'y	2	0	152803
	Hardware Complete	1	1	152821
	1/2" x 4" Hex Bolt	2	2	801215*
	1/2" Lockwasher	2	2	817342*
	1/2" Hex Nut	2	2	804055*
	1/2" Flatwasher	2	2	817412*
	Manufacturer I.D. Label	1	1	159151*

Unless Otherwise Specified, All Units of Measure are Each
** Included in Hardware*

Warning: During Installation, Hardware And Small Parts Are Choking Hazards For Young Children. Store Unused Parts Appropriately Until Assembly Is Completed. Once Assembly Is Completed, Remove Any Unused Parts From The Play Environment And Dispose/Save Them In A Secure Location.
Note: Loctite (supplied by others) should be used on all threaded hardware.

DETAILS -for-
12583 & 12584

IMPORTANT

TO REDUCE THE RISK OF CLOTHING ENTANGLEMENT IN COMPLIANCE WITH ASTM F1487, ANY BOLT END PROTRUDING MORE THAN TWO FULL THREADS BEYOND THE FACE OF THE NUT SHALL BE CUT-OFF FLUSH, FILED SMOOTH AND TREATED TO PREVENT CORROSION.

NOTE: AFTER ASSEMBLY IS COMPLETE, PEEN TEE-NUTS AND FLATWASHERS TO MATCH RADIUS OF PIPE.

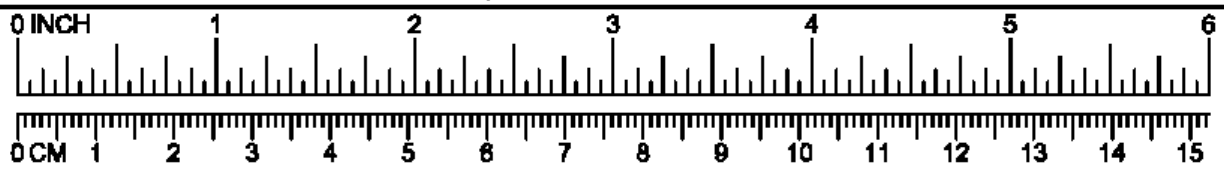

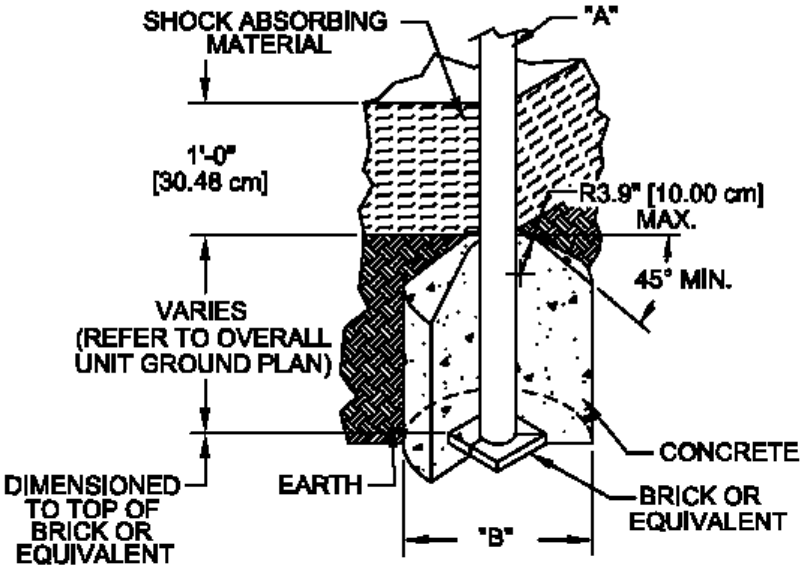

DIA. "A" (PIPE SIZE)	DIA. "B" (FOOTING SIZE)
1 1/16" [2.70 cm]	1'-2" [35.56 cm]
1 5/16" [3.33 cm]	1'-2" [35.56 cm]
1 5/8" [4.13 cm]	1'-2" [35.56 cm]
1 7/8" [4.83 cm]	1'-2" [35.56 cm]
2 3/8" [6.03 cm]	1'-2" [35.56 cm]
3 1/2" [8.89 cm]	1'-6" [45.72 cm]
ARCH SWING	
3 1/2" [8.89 cm]	2'-0" [60.96 cm]

NOTES:
- SLOPED FOOTING IS A REQUIREMENT OF EUROPEAN STANDARD EN1176-1 ONLY
- SUGGESTED MINIMUM CONCRETE RATING: 3000 PSI

005

SHOCK ABSORBING PROPERTIES OF SURFACING MATERIALS VARY. IF YOU DETERMINE THAT LESS THAN 1'-0" [30.48cm] OF SURFACING IS REQUIRED, MAKE UP THE DIFFERENCE IN ELEVATION WITH EARTH, BEFORE APPLYING SURFACING.

NOTE: PEEN FLATWASHERS AFTER INSTALLATION TO MATCH RADIUS OF TOPRAIL.

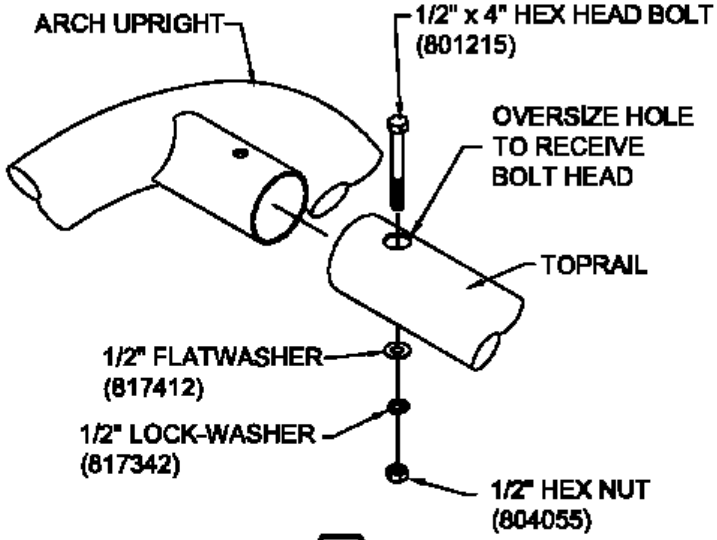

020

14926

GameTime
A PLAYCORE Company
1-800-235-2440

NATIONAL DEMONSTRATION SITE SIGN PACKAGE

ISSUED/REVISED: 2/15/19

= INSTALLATION DETAIL

= PARTS LIST REFERENCE

NDS FITNESS SIGN PACKAGE	14926
NDS PLAY ON SIGN PACKAGE	14927
NDS INCLUSIVE PLAY SIGN PACKAGE	14928
NDS PATHWAYS FOR PLAY SIGN PACKAGE	14929
NDS NATURE GROUNDS SIGN PACKAGE	14930

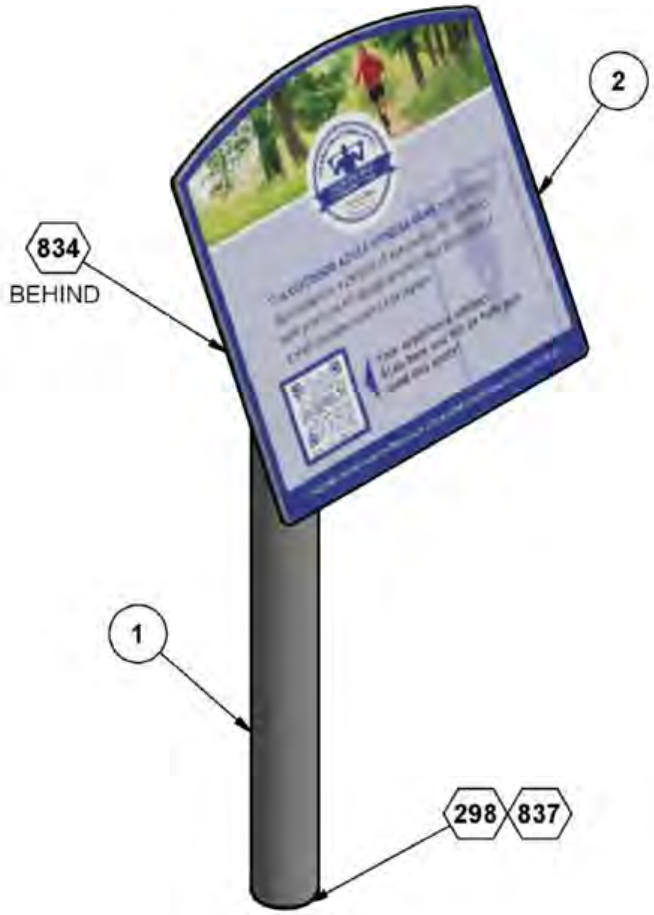

ASSEMBLY VIEW

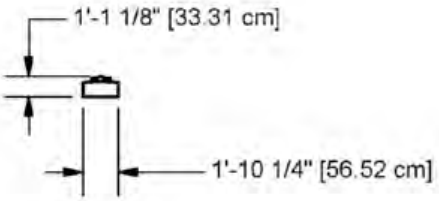

TOP VIEW

Parts List							
REF.	DESCRIPTION	14926	14927	14928	14929	14930	PART NUMBER
1	SIGN POST WELD ASS'Y	1	1	1	1	1	216574
2	NDS FITNESS SIGN	1	0	0	0	0	216564
2	NDS PLAY ON SIGN	0	1	0	0	0	216566
2	NDS INCLUSIVE PLAY SIGN	0	0	1	0	0	216568
2	NDS PATHWAYS FOR PLAY SIGN	0	0	0	1	0	216570
2	NDS NATURE GROUNDS SIGN	0	0	0	0	1	216572
	HARDWARE COMPLETE	1	1	1	1	1	216580
	1/4" x 3/4" B.H.C.S.	4	4	4	4	4	811010*
	1/4" LOCK WASHER	4	4	4	4	4	817327*
	1/4" FLAT WASHER (5/8" O.D.)	4	4	4	4	4	817408*
	1/2" ANCHOR ROD	1	1	1	1	1	135038*

Unless Otherwise Specified, All Units of Measure are Each
** Included in Hardware*

Warning: During Installation, Hardware And Small Parts Are Choking Hazards For Young Children. Store Unused Parts Appropriately Until Assembly Is Completed. Once Assembly Is Completed, Remove Any Unused Parts From The Play Environment And Dispose/Save Them In A Secure Location.

Note: Peen Tee-Nuts and Flatwashers to match radius of pipe after assembly is complete.

Note: Loctite (supplied by others) should be used on any non-patch hardware.

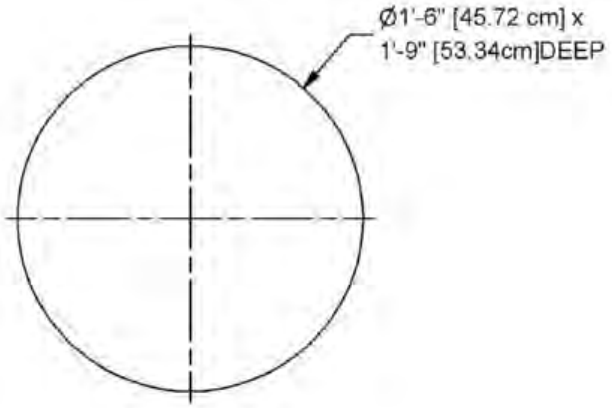

GROUND PLAN

CONCRETE REQUIRED:
12 CUBIC YARDS
[.09 CUBIC METERS]

NOTE: HOLE DEPTHS INDICATED ON ALL GROUND PLANS ARE MEASURED FROM THE FINISHED SURFACE. SEE DETAIL 298. ALL FOOTING DIMENSIONS ARE BASED ON LEVEL FINISHED SURFACE.

INSTALLATION INSTRUCTIONS

NOTE: THIS INSTALLATION BOOKLET SHOULD BE KEPT IN CUSTOMER'S FILE FOR FUTURE REFERENCE.

NOTE: Do not overtighten bolts. To overtighten may cause buckling or dimpling of some parts.

NOTE: Read installation instructions thoroughly before starting assembly. Bracing material may be required during assembly.

STEP 1: Dig required hole. Place a brick or equivalent in the bottom of hole to provide a solid foundation. See Assembly Drawing and Ground Plan.

STEP 2: Bolt Sign onto Sign Post Weld Assembly as Shown in Detail 834.

STEP 3: Place Anchor Rod into Sign Post Weld Ass'y using Detail 837.

STEP 4: Place Assembly into center of ground hole, plumb and level. Pour concrete in ground hole all 48 hours to cure.

SPECIFICATIONS

SIGN POST WELD ASSEMBLY: Shall be an all welded construction consisting of 3 1/2" O.D. x .095" (13 gauge) wall galvanized steel tubing and 1/4" thick hot rolled steel mounting plate. The Sign Post Weld Assembly shall be an all weld assembly and shall be coated after fabrication with a custom formula of TGIC polyester powder coating in conformance with the specification outlined herein.

NDS SIGNS: The NDS Signs shall be 1/2" thick exterior DHPL with a 12 color high definition printed graphic with four 1/4" -20 UNC threaded inserts for mounting.

POWDER COAT FINISH: Shall be an electrostatically applied custom formula of TGIC polyester powder. All components will be free of sharp edges and excess weld spatter and shall be cleaned in a four stage solvent / zirconium based bath system (free of iron phosphate), as a rust inhibitor, and a zirconium conversion coating to prevent flash rusting before coating. In addition, all welds shall be protectively coated with ZRP, a zinc rich primer that forms a rust-resistant barrier layer over each weld prior to application of the powder coating. The powder coating shall have a super tough finish with maximum exterior durability and will have superior adhesion characteristics. Typical characteristics are: Two coat process to achieve 3.0 - 5.0 mil thickness and oven cured between 350 degrees Fahrenheit. Pencil Hardness H (ASTM D-3363), Impact (ASTM D-2794- 69), Wedge Bend (ASTM D-522-68), Adhesion (Cross Hatch ASTM D-3359 & Knife Scratch ASTM D-2197), Environmental (Stain Resistance ASTM D-1308, Humidity ASTM D-2247 - 87, Salt Spray ASTM B-117 & Fadometer 300 hrs with no loss of gloss), Over-bake Stability 100% at 350 degrees Fahrenheit for 10 minutes.

HARDWARE: All nuts, bolts, screws, inserts, and lockwashers used in the assembly of all play equipment, shall be stainless steel, yellow dichromate plated steel, blue-coat plated steel, mechanically galvanized or powder coated/yellow dichromate plated steel. All primary fasteners shall be 300 series stainless steel. Fasteners with yellow dichromate treatment have an electro deposited, 99.9% pure zinc substrate applied from a specially formulated solution sealed with a yellow dichromate top coat designed to work in conjunction with the zinc plating. Yellow dichromate has a 320% longer life to white corrosion and 275% longer to red corrosion than does hot-dip galvanizing. NOTE: All weights are based on average comparisons of each part.

SPECIFICATIONS: GAMETIME® has a policy of continuous improvement and reserves the right to discontinue or change specifications without notice.

IMPORTANT PRODUCT INFORMATION AND SAFETY WARNINGS

☐ All equipment should be installed on a soft, resilient, energy-absorbing ground surface. NEVER INSTALL PLAY EQUIPMENT ON CONCRETE OR ASPHALT. A fall on a hard surface can result in serious injury to the equipment user.

☐ ALWAYS FOLLOW INSTALLATION INSTRUCTIONS WHEN ERECTING EQUIPMENT.

☐ Worn surfaces around equipment should be restored. Concrete footings should never be exposed. Surface depth should comply with installation instructions.

☐ Equipment should be placed to eliminate conflicting traffic patterns.

☐ To reduce risk of clothing entanglement in compliance with ASTM F1487, any bolt end protuding more than two full threads beyond the face of the nut shall be cut-off, filed smooth and treated to prevent corrosion. Sharp edges on pipes should be capped or removed. Check for bent, broken or severely worn pipe and replace.

☐ Test overall stability and rigidity of all play equipment. Check for proper assembly, installation and ground anchoring.

☐ Check for and repair damage caused by wear or vandalism, a major factor in injury-causing situations.

☐ GameTime® PROVIDES ITS CUSTOMERS WITH COMPLETE SPECIFICATION SHEETS AND INSTALLATION INSTRUCTIONS. THE SPECIFICATION SHEET CONTAINS THE LISTING OF EVERY PART USED IN A PIECE OF EQUIPMENT AND SHOULD BE KEPT IN THE CUSTOMER'S FILES FOR ACCURATE REFERENCE WHEN REPLACEMENT PARTS ARE NEEDED.

☐ Never add components not intended for use with this product.

☐ Regular maintenance is necessary on this and all park and recreational equipment to ensure the safety of the user.

☐ Proper maintenance of GameTime® equipment requires regular tightening of all bolts, nuts, and set screws.

☐ All equipment should be free of rust and repainted whenever necessary to deter rusting.

☐ Regular checking of all parts, castings, etc. should be made. If a part is broken or worn it should be replaced immediately.

☐ Never use GAMETIME playground equipment around or in conjunction with swimming pools, ponds, lakes or any other bodies of water.

☐ Check to be sure all fittings are tight and that the bars and pipes do not move.

☐ A soft resilient surface should be placed under all swings, extending at least six feet beyond the farthest arc of the swing seat both fron and back. NEVER INSTALL PLAY EQUIPMENT ON CONCRETE OR ASPHALT.

DETAILS -for-
14926-14930

IMPORTANT

TO REDUCE THE RISK OF CLOTHING ENTANGLEMENT IN COMPLIANCE WITH ASTM F1487, ANY BOLT END PROTRUDING MORE THAN TWO FULL THREADS BEYOND THE FACE OF THE NUT SHALL BE CUT-OFF FLUSH, FILED SMOOTH AND TREATED TO PREVENT CORROSION.

NOTE: LOCTITE (SUPPLIED BY OTHERS) SHOULD BE USED ON ALL THREADED HARDWARE

NOTE: AFTER ASSEMBLY IS COMPLETE, PEEN TEE-NUTS AND FLATWASHERS TO MATCH RADIUS OF PIPE.

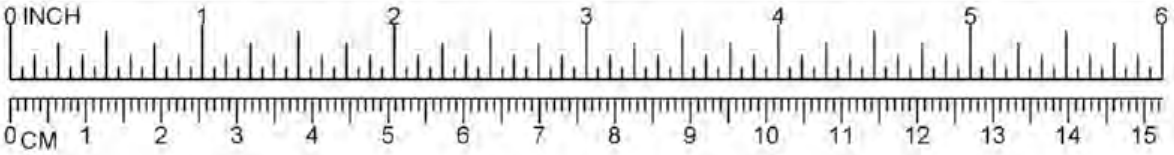

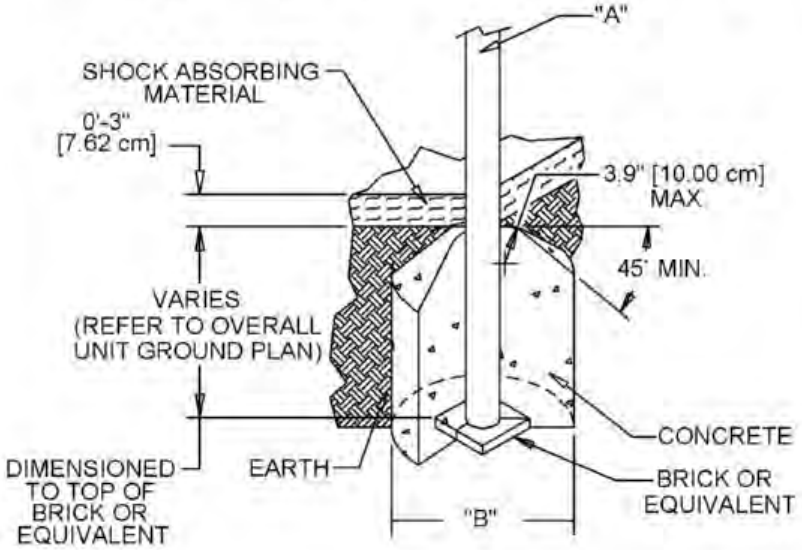

DIA. "A" (PIPE SIZE)	DIA. "B" (FOOTING SIZE)
1 1/16" [2.70 cm]	1'-2" [35.56 cm]
1 5/16" [3.33 cm]	1'-2" [35.56 cm]
1 5/8" [4.13 cm]	1'-2" [35.56 cm]
1 7/8" [4.83 cm]	1'-2" [35.56 cm]
2 3/8" [6.03 cm]	1'-2" [35.56 cm]
3 1/2" [8.89 cm]	1'-6" [45.72 cm]
5" [12.70 cm]	1'-6" [45.72cm]

NOTES:
-SLOPED FOOTING IS A REQUIREMENT OF EUROPEAN STANDARD EN1176-1 ONLY
-SUGGESTED MINIMUM CONCRETE RATING: 3000 PSI

298

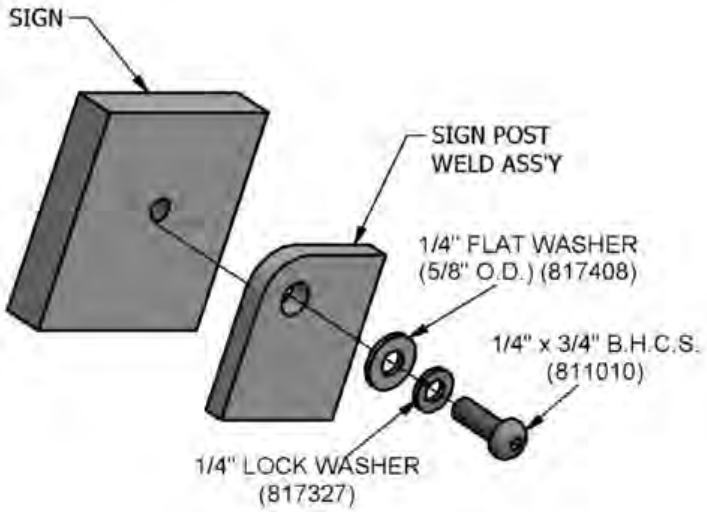

834

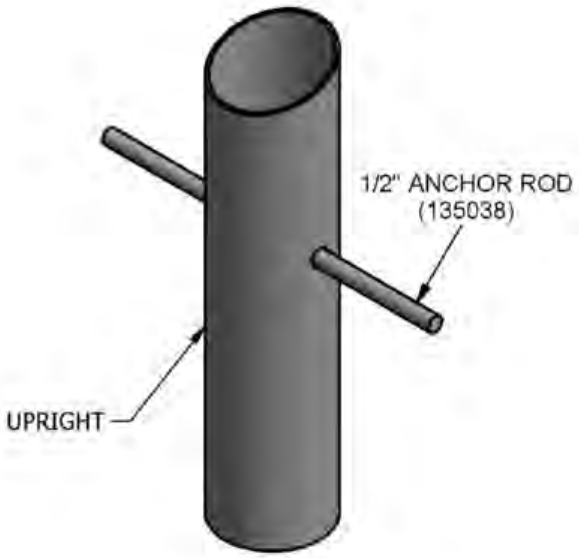

837

playtrails

GameTime — A PLAYCORE COMPANY

Enriching Childhood Through Play.

1-800-235-2440

ISSUED/REVISED: 8/18/16

38010 VINE CLIMBER LOW

VINE CLIMBER LOW	**38010**
VINE CLIMBER HIGH	**38011**

⬡ = INSTALLATION DETAIL

○ = PARTS LIST REFERENCE

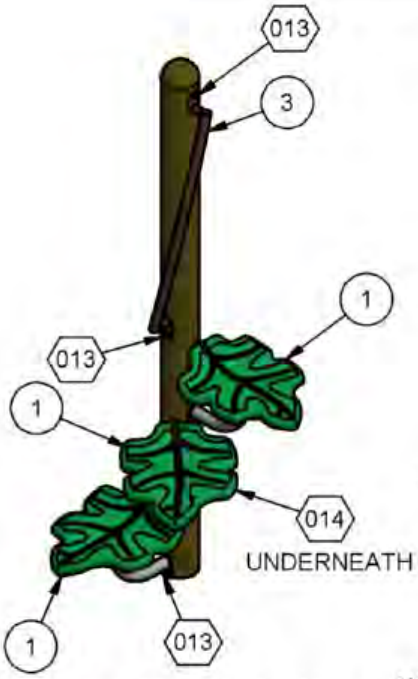

ASSEMBLY VIEW

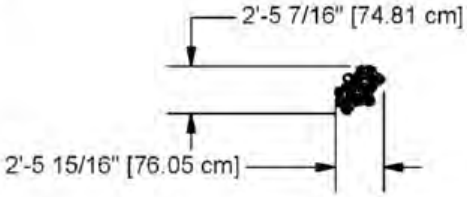

TOP VIEW

NOTE: THE LEAF SPACING ON 38010 IS FROM GROUND TO 3'-0".

38010

INSTRUCTIONS

1. Before assembling this equipment, read the enclosed INSTALLATION INSTRUCTIONS in the installation booklet; follow all the instructions during installation.
2. Assemble parts as shown in the ASSEMBLY DRAWING. Refer to the assembly details for the specific hardware required in each connection.
3. Loctite (supplied by others) should be used on all threaded hardware.

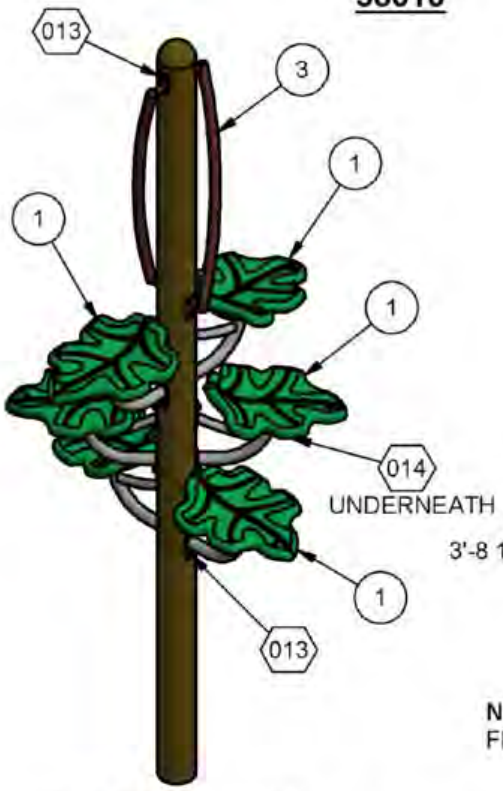

ASSEMBLY VIEW

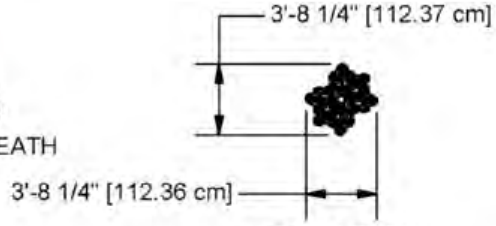

TOP VIEW

NOTE: THE LEAF SPACING ON 38011 IS FROM 4'-0" TO 6'-0".

38011

Parts List				
REF.	DESCRIPTION	38010	38011	PART NUMBER
1	LEAF STEP	3	6	201413
2	LEAF BRACKET	3	6	201695
3	HANDHOLD	1	2	201685
4	UPRIGHT	1	0	LIDOR0
4	UPRIGHT	0	1	LIDOR1
	HARDWARE COMPLETE	1	0	201681
	HARDWARE COMPLETE	0	1	201682
	3/8" x 1" P.B.H.C.S. w/PATCH	12	24	812050*
	3/8" x 1 1/4" P.B.H.C.S. w/PATCH	8	16	812051*
	3/8" LOCK WASHER	20	40	817334*
	3/8" FLAT WASHER	20	40	817410*

Unless Otherwise Specified, All Units of Measure are Each
** Included in Hardware*

Warning: During Installation, Hardware And Small Parts Are Choking Hazards For Young Children. Store Unused Parts Appropriately Until Assembly Is Completed. Once Assembly Is Completed, Remove Any Unused Parts From The Play Environment And Dispose/Save Them In A Secure Location.
Note: Peen Tee-Nuts and Flatwashers to match radius of pipe after assembly is complete.

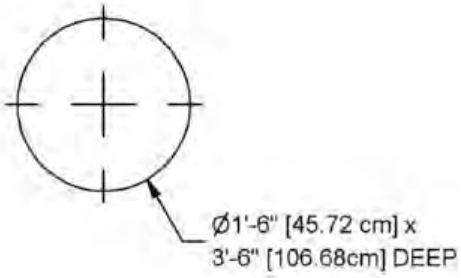

CONCRETE REQUIRED
.16 CUBIC YARDS
.12 CUBIC METERS

GROUND PLAN

NOTE: WHEN USING 38010 AND 38011 SIDE BY SIDE
THE UPRIGHT SPACING IS 3'-9 1/2" FROM CENTER TO CENTER.

SPECIFICATIONS

LEAF STEP
Shall be color impregnated linear low-density polyethylene and shall conform to the rotationally molded specifications outlined herein with double wall construction molded to a minimum .25" wall thickness.

LEAF BRACKET
Shall be fabricated from 1-1/16" O.D. x 15 gauge (.072") wall, 1-5/16" O.D. x 14 gauge (.083") wall Galv. Steel Pipe and 3/16" Hot Rolled Steel. The Leaf Bracket shall be coated with a custom formula of TGIC polyester powder coating in conformance with the specifications outlined herein, after fabrication.

HANDHOLD
Shall be fabricated from 1-1/16" O.D. x 15 gauge (.072") wall, 1-5/16" O.D. x 14 gauge (.083") wall Galv. Steel Pipe and 3/16" Hot Rolled Steel. The Handhold shall be coated with a custom formula of TGIC polyester powder coating in conformance with the specifications outlined herein, after fabrication.

ROTATIONALLY MOLDED PRODUCTS
All polyethylene shall be linear low-density material with UV-stabilized color and an anti-static compound additive. All rotationally molded products shall meet or exceed the following specifications: ASTM D-1248, type 2, class A and Federal specification LP-390C, type 1, class M, grade 2, category 3; Density (ASTM D- 1505); Brittleness Temperature (ASTM D-746); Tensile Values (ASTM D-638); Flexural Modulus (ASTM D-790);Heat Distortion (ASTM-648); Low Temperature Impact (ARM-STD).

POWDER COAT FINISH
Shall be an electrostatically applied custom formula of TGIC polyester powder. All components will be free of sharp edges and excess weld spatter and shall be cleaned in a six stage bath system with an iron phosphate wash, as a rust inhibitor, and a sealer to prevent flash rusting before coating.

In addition, all welds shall be protectively coated with ZRP, a zinc rich primer that forms a rust-resistant barrier layer over each weld prior to application of the powder coating. The powder coating shall have a super tough finish with maximum exterior durability and will have superior adhesion characteristics. Typical characteristics are: 3.0 - 5.0 mil thickness and oven cured between 375 to 425 degrees Fahrenheit. Pencil Hardness H (ASTM D-3363), Impact (ASTM D-2794- 69), Wedge Bend (ASTM D-522-68), Adhesion (Cross Hatch ASTM D-3359 & Knife Scratch ASTM D-2197), Environmental (Stain Resistance ASTM D-1308, Humidity ASTM D-2247 - 87, Salt Spray ASTM B-117 & Fadometer 300 hrs with no loss of gloss), Over-bake Stability 100% at 400 degrees Fahrenheit.

HARDWARE
All nuts, bolts, screws, inserts, and lockwashers used in the assembly of all play equipment shall be stainless steel, yellow dichromate plated steel, blue-coat plated steel, mechanically galvanized or powder coated/yellow dichromate plated steel. All primary fasteners shall be 304 alloy stainless steel. Fasteners with yellow dichromate treatment have an electro-deposited, 99.9% pure zinc substrate applied from a specially formulated solution sealed with a yellow dichromate top coat designed to work in conjunction with the zinc plating. Yellow dichromate has a 320% longer life to white corrosion and 275% longer to red corrosion than does hot-dip galvanizing. All primary stainless steel fasteners shall be Button Head Socket Caps.

SPECIFICATIONS
GAMETIME © has a policy of continuous improvement and reserves the right to discontinue or change specifications without notice.

IMPORTANT PRODUCT INFORMATION AND SAFETY WARNINGS

☐ All equipment should be installed on a soft, resilient, energy-absorbing ground surface. NEVER INSTALL PLAY EQUIPMENT ON CONCRETE OR ASPHALT. A fall on a hard surface can result in serious injury to the equipment user.

☐ ALWAYS FOLLOW INSTALLATION INSTRUCTIONS WHEN ERECTING EQUIPMENT.

☐ Worn surfaces around equipment should be restored. Concrete footings should never be exposed. Surface depth should comply with installation instructions.

☐ Equipment should be placed to eliminate conflicting traffic patterns.

☐ Test overall stability and rigidity of all play equipment. Check for proper assembly, installation and ground anchoring.

☐ Check for and repair damage caused by wear or vandalism, a major factor in injury-causing situations.

☐ GAMETIME® PROVIDES ITS CUSTOMERS WITH COMPLETE SPECIFICATION SHEETS AND INSTALLATION INSTRUCTIONS. THE SPECIFICATION SHEET CONTAINS THE LISTING OF EVERY PART USED IN A PIECE OF EQUIPMENT AND SHOULD BE KEPT IN THE CUSTOMER'S FILES FOR ACCURATE REFERENCE WHEN REPLACEMENT PARTS ARE NEEDED.

☐ Never add components not intended for use with this product.

☐ Regular maintenance is necessary on this and all park and recreational equipment to ensure the safety of the user.

☐ Proper maintenance of GAMETIME® equipment requires regular tightening of all bolts, nuts, and set screws.

☐ All equipment should be free of rust and repainted whenever necessary to deter rusting.

☐ Regular checking of all parts, castings, etc., should be made. If a part is broken or worn it should be replaced immediately.

☐ Check for loose spring castings and tighten.

☐ A soft, resilient surface should be placed under all equipment, extending at least six feet in all directions surrounding the equipment. NEVER INSTALL PLAY EQUIPMENT ON CONCRETE OR ASPHALT.

DETAILS -for-
38010

Important

To Reduce the Risk of Clothing Entanglement in Compliance with ASTM F1487, Any Bolt End Protruding More Than Two Full Threads Beyond the Face of the Nut Shall Be Cut-Off Flush, Filed Smooth and Treated to Prevent Corrosion.

Note: Loctite (Supplied by Others) Should be Used on All Threaded Hardware.

Note: After Assembly is Complete, Peen Tee-Nuts and Flatwashers to Match Radius of Pipe.

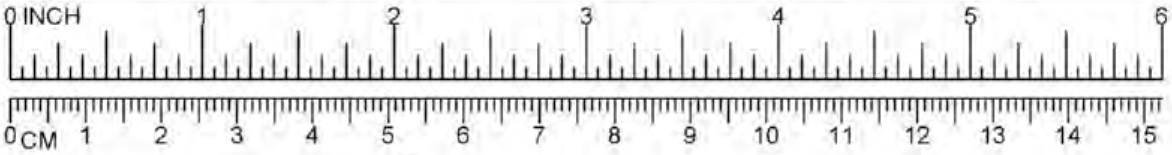

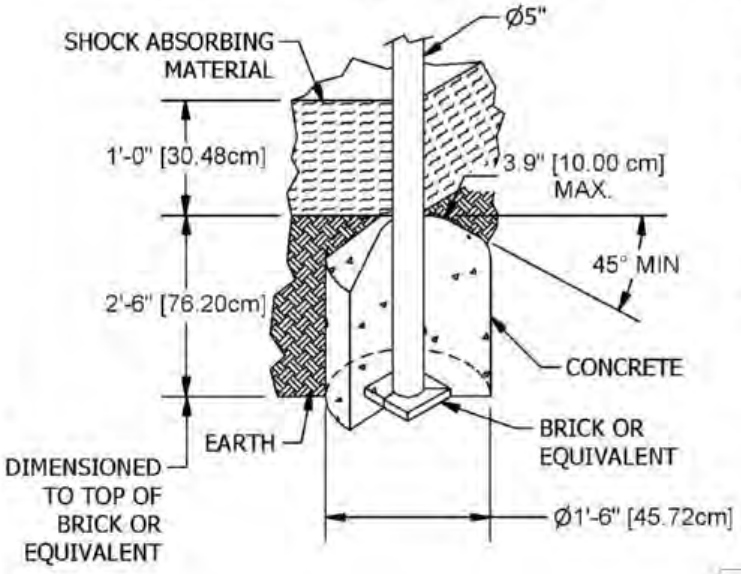

NOTES:
-SLOPED FOOTING IA A REQUIREMENT OF EUROPEAN STANDARD EN1176-1 ONLY
-SUGGESTED MINIMUM CONCRETE RATING: 3000PSI

SHOCK ABSORBING PROPERTIES OF SURFACING MATERIALS VARY. IF YOU DETERMINETHAT LESS THAN 1'-0" [30.48cm] OF SURFACING IS REQUIRED, MAKE UP THE DIFFERENCE IN ELEVATION WITH EARTH, BEFORE APPLYING SURFACING.

042

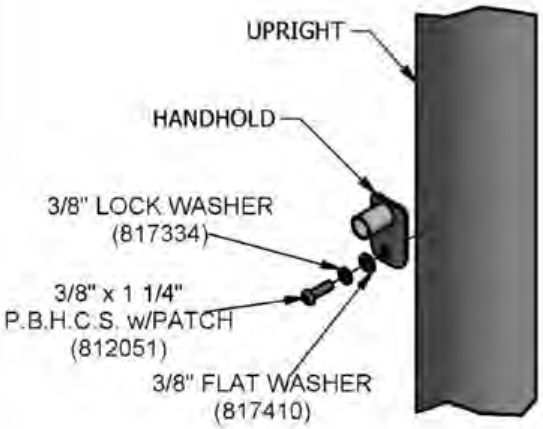

013

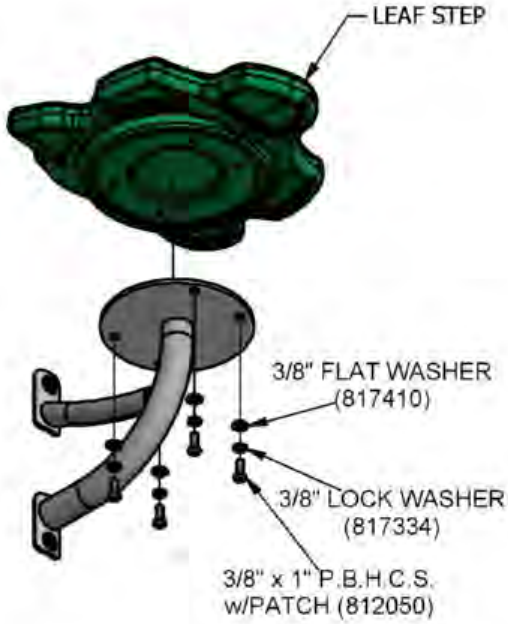

014

playtrails

GameTime — A PLAYCORE COMPANY

Enriching Childhood Through Play.

1-800-235-2440

ISSUED/REVISED: 8/18/16

38010 VINE CLIMBER LOW

VINE CLIMBER LOW	**38010**
VINE CLIMBER HIGH	**38011**

⬡ = INSTALLATION DETAIL

○ = PARTS LIST REFERENCE

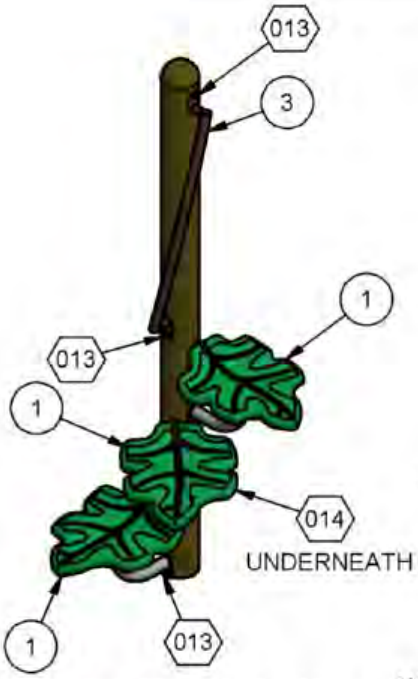

ASSEMBLY VIEW

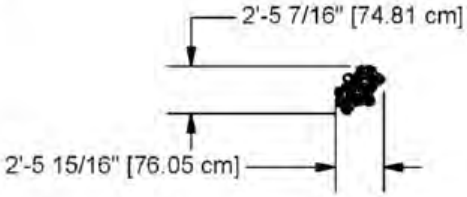

TOP VIEW

NOTE: THE LEAF SPACING ON 38010 IS FROM GROUND TO 3'-0".

38010

INSTRUCTIONS

1. Before assembling this equipment, read the enclosed INSTALLATION INSTRUCTIONS in the installation booklet; follow all the instructions during installation.
2. Assemble parts as shown in the ASSEMBLY DRAWING. Refer to the assembly details for the specific hardware required in each connection.
3. Loctite (supplied by others) should be used on all threaded hardware.

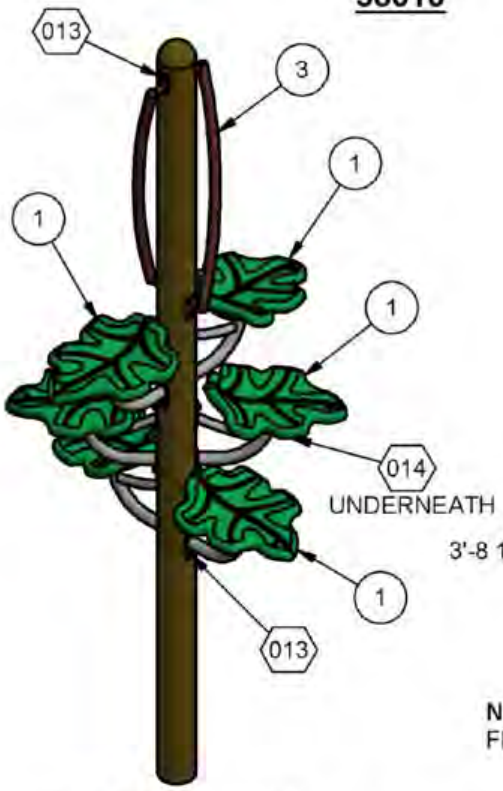

ASSEMBLY VIEW

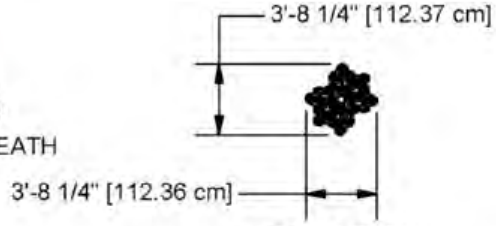

TOP VIEW

NOTE: THE LEAF SPACING ON 38011 IS FROM 4'-0" TO 6'-0".

38011

Parts List				
REF.	DESCRIPTION	38010	38011	PART NUMBER
1	LEAF STEP	3	6	201413
2	LEAF BRACKET	3	6	201695
3	HANDHOLD	1	2	201685
4	UPRIGHT	1	0	LIDOR0
4	UPRIGHT	0	1	LIDOR1
	HARDWARE COMPLETE	1	0	201681
	HARDWARE COMPLETE	0	1	201682
	3/8" x 1" P.B.H.C.S. w/PATCH	12	24	812050*
	3/8" x 1 1/4" P.B.H.C.S. w/PATCH	8	16	812051*
	3/8" LOCK WASHER	20	40	817334*
	3/8" FLAT WASHER	20	40	817410*

Unless Otherwise Specified, All Units of Measure are Each
** Included in Hardware*

Warning: During Installation, Hardware And Small Parts Are Choking Hazards For Young Children. Store Unused Parts Appropriately Until Assembly Is Completed. Once Assembly Is Completed, Remove Any Unused Parts From The Play Environment And Dispose/Save Them In A Secure Location.
Note: Peen Tee-Nuts and Flatwashers to match radius of pipe after assembly is complete.

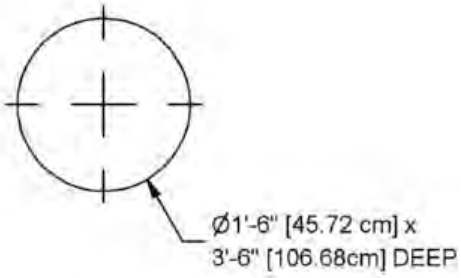

CONCRETE REQUIRED
.16 CUBIC YARDS
.12 CUBIC METERS

GROUND PLAN

NOTE: WHEN USING 38010 AND 38011 SIDE BY SIDE
THE UPRIGHT SPACING IS 3'-9 1/2" FROM CENTER TO CENTER.

SPECIFICATIONS

LEAF STEP
Shall be color impregnated linear low-density polyethylene and shall conform to the rotationally molded specifications outlined herein with double wall construction molded to a minimum .25" wall thickness.

LEAF BRACKET
Shall be fabricated from 1-1/16" O.D. x 15 gauge (.072") wall, 1-5/16" O.D. x 14 gauge (.083") wall Galv. Steel Pipe and 3/16" Hot Rolled Steel. The Leaf Bracket shall be coated with a custom formula of TGIC polyester powder coating in conformance with the specifications outlined herein, after fabrication.

HANDHOLD
Shall be fabricated from 1-1/16" O.D. x 15 gauge (.072") wall, 1-5/16" O.D. x 14 gauge (.083") wall Galv. Steel Pipe and 3/16" Hot Rolled Steel. The Handhold shall be coated with a custom formula of TGIC polyester powder coating in conformance with the specifications outlined herein, after fabrication.

ROTATIONALLY MOLDED PRODUCTS
All polyethylene shall be linear low-density material with UV-stabilized color and an anti-static compound additive. All rotationally molded products shall meet or exceed the following specifications: ASTM D-1248, type 2, class A and Federal specification LP-390C, type 1, class M, grade 2, category 3; Density (ASTM D- 1505); Brittleness Temperature (ASTM D-746); Tensile Values (ASTM D-638); Flexural Modulus (ASTM D-790);Heat Distortion (ASTM-648); Low Temperature Impact (ARM-STD).

POWDER COAT FINISH
Shall be an electrostatically applied custom formula of TGIC polyester powder. All components will be free of sharp edges and excess weld spatter and shall be cleaned in a six stage bath system with an iron phosphate wash, as a rust inhibitor, and a sealer to prevent flash rusting before coating.

In addition, all welds shall be protectively coated with ZRP, a zinc rich primer that forms a rust-resistant barrier layer over each weld prior to application of the powder coating. The powder coating shall have a super tough finish with maximum exterior durability and will have superior adhesion characteristics. Typical characteristics are: 3.0 - 5.0 mil thickness and oven cured between 375 to 425 degrees Fahrenheit. Pencil Hardness H (ASTM D-3363), Impact (ASTM D-2794- 69), Wedge Bend (ASTM D-522-68), Adhesion (Cross Hatch ASTM D-3359 & Knife Scratch ASTM D-2197), Environmental (Stain Resistance ASTM D-1308, Humidity ASTM D-2247 - 87, Salt Spray ASTM B-117 & Fadometer 300 hrs with no loss of gloss), Over-bake Stability 100% at 400 degrees Fahrenheit.

HARDWARE
All nuts, bolts, screws, inserts, and lockwashers used in the assembly of all play equipment shall be stainless steel, yellow dichromate plated steel, blue-coat plated steel, mechanically galvanized or powder coated/yellow dichromate plated steel. All primary fasteners shall be 304 alloy stainless steel. Fasteners with yellow dichromate treatment have an electro-deposited, 99.9% pure zinc substrate applied from a specially formulated solution sealed with a yellow dichromate top coat designed to work in conjunction with the zinc plating. Yellow dichromate has a 320% longer life to white corrosion and 275% longer to red corrosion than does hot-dip galvanizing. All primary stainless steel fasteners shall be Button Head Socket Caps.

SPECIFICATIONS
GAMETIME © has a policy of continuous improvement and reserves the right to discontinue or change specifications without notice.

IMPORTANT PRODUCT INFORMATION AND SAFETY WARNINGS

☐ All equipment should be installed on a soft, resilient, energy-absorbing ground surface. NEVER INSTALL PLAY EQUIPMENT ON CONCRETE OR ASPHALT. A fall on a hard surface can result in serious injury to the equipment user.

☐ ALWAYS FOLLOW INSTALLATION INSTRUCTIONS WHEN ERECTING EQUIPMENT.

☐ Worn surfaces around equipment should be restored. Concrete footings should never be exposed. Surface depth should comply with installation instructions.

☐ Equipment should be placed to eliminate conflicting traffic patterns.

☐ Test overall stability and rigidity of all play equipment. Check for proper assembly, installation and ground anchoring.

☐ Check for and repair damage caused by wear or vandalism, a major factor in injury-causing situations.

☐ GAMETIME® PROVIDES ITS CUSTOMERS WITH COMPLETE SPECIFICATION SHEETS AND INSTALLATION INSTRUCTIONS. THE SPECIFICATION SHEET CONTAINS THE LISTING OF EVERY PART USED IN A PIECE OF EQUIPMENT AND SHOULD BE KEPT IN THE CUSTOMER'S FILES FOR ACCURATE REFERENCE WHEN REPLACEMENT PARTS ARE NEEDED.

☐ Never add components not intended for use with this product.

☐ Regular maintenance is necessary on this and all park and recreational equipment to ensure the safety of the user.

☐ Proper maintenance of GAMETIME® equipment requires regular tightening of all bolts, nuts, and set screws.

☐ All equipment should be free of rust and repainted whenever necessary to deter rusting.

☐ Regular checking of all parts, castings, etc., should be made. If a part is broken or worn it should be replaced immediately.

☐ Check for loose spring castings and tighten.

☐ A soft, resilient surface should be placed under all equipment, extending at least six feet in all directions surrounding the equipment. NEVER INSTALL PLAY EQUIPMENT ON CONCRETE OR ASPHALT.

DETAILS -for-
38010

Important

To Reduce the Risk of Clothing Entanglement in Compliance with ASTM F1487, Any Bolt End Protruding More Than Two Full Threads Beyond the Face of the Nut Shall Be Cut-Off Flush, Filed Smooth and Treated to Prevent Corrosion.

Note: Loctite (Supplied by Others) Should be Used on All Threaded Hardware.

Note: After Assembly is Complete, Peen Tee-Nuts and Flatwashers to Match Radius of Pipe.

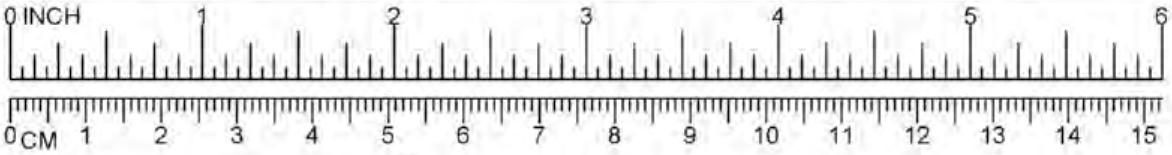

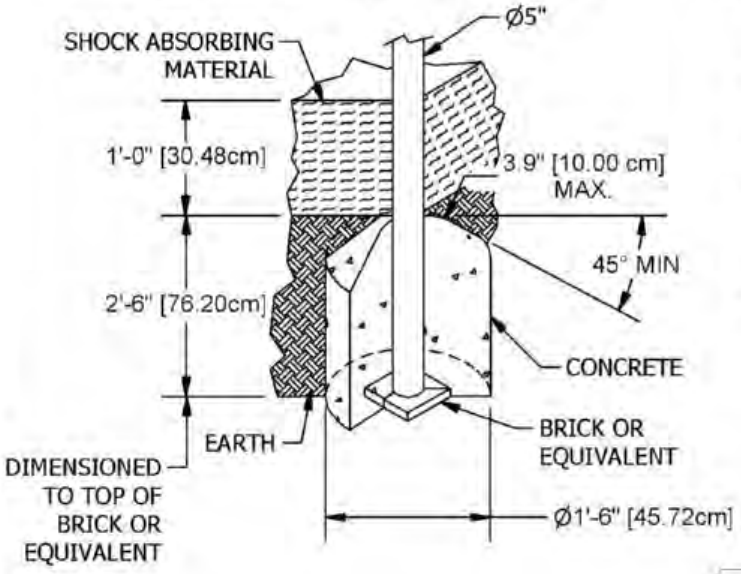

NOTES:
-SLOPED FOOTING IA A REQUIREMENT OF EUROPEAN STANDARD EN1176-1 ONLY
-SUGGESTED MINIMUM CONCRETE RATING: 3000PSI

SHOCK ABSORBING PROPERTIES OF SURFACING MATERIALS VARY. IF YOU DETERMINETHAT LESS THAN 1'-0" [30.48cm] OF SURFACING IS REQUIRED, MAKE UP THE DIFFERENCE IN ELEVATION WITH EARTH, BEFORE APPLYING SURFACING.

042

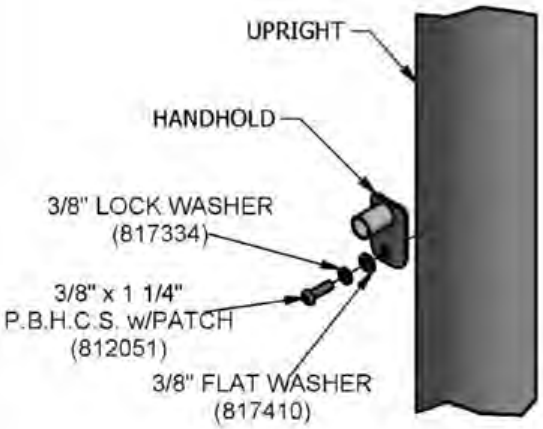

013

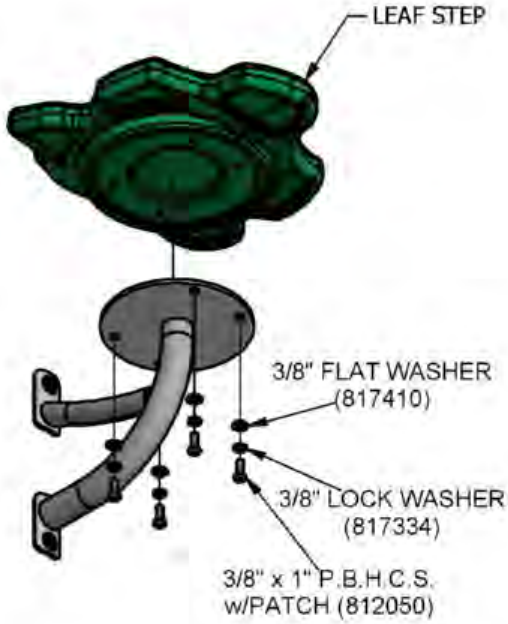

014

NEW! POWERSCAPE® PLUS

A PLAYCORE COMPANY GameTime®

Enriching Childhood Through Play.

1-800-235-2440

ISSUED/REVISED: 3/24/10

80000
DECKS

SQUARE 80000
TRIANGLE 80001

⬡ = INSTALLATION DETAIL

○ = PARTS LIST REFERENCE

Note: The Uprights Shown Are Not Included In The Deck Packages. See Overall Plan View For Uprights.

INSTALLATION INSTRUCTIONS

1.Before assembling this equipment, read the enclosed *Installer Instructions* in the installation booklet; follow all the instructions during assembly.
2. Dig ground holes per Ground Plan. See system topview for quantity.
3. Attach deck to uprights using (1) Detail 030 per upright.
4. Loctite (supplied by others) should be used on all threaded hardware.
5. When decks are at the same height as shown in Assembly Drawing, fasten together using (2) Detail 031.
NOTE: Remove vinyl from the two inside holes, with 1/2" bit.

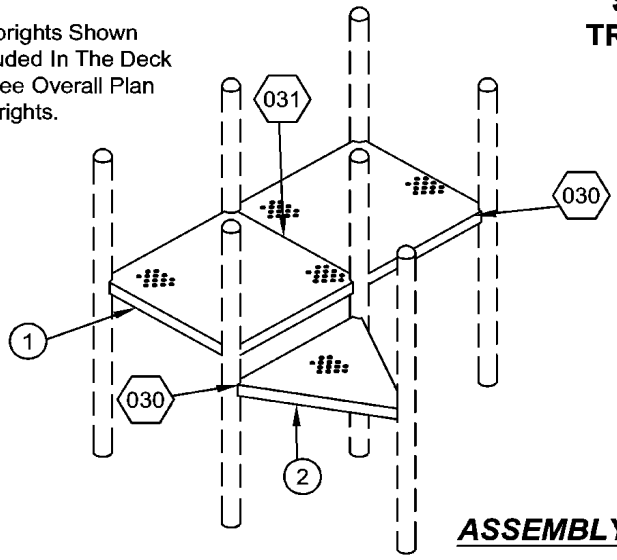

ASSEMBLY DRAWING

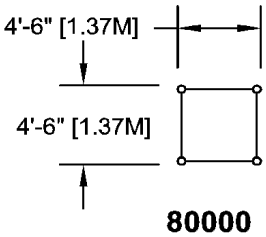

80000

TOP VIEWS

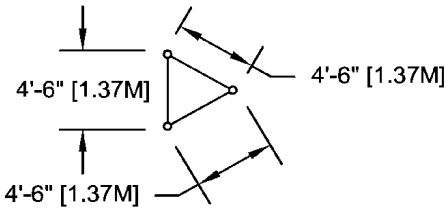

80001

PARTS LIST

REF NO.	DESCRIPTION	80000	80001	PART NUMBER
1	Punched Deck, Square	1	0	163307
2	Punched Deck, Triangle	0	1	163317
	Hardware Complete	1	0	161254
	Hardware Complete	0	1	161255
	3/8" x 3/4" P.B.H.C.S. w/Patch	2	2	812052*
	3/8" x 1 1/2" P.B.H.C.S.	8	6	810053*
	3/8" Tee-Nut	2	2	804556*
	3/8" Lockwasher	10	8	817334*
	3/8" Flatwasher (1 1/4" O.D.)	10	8	817424*

Unless Otherwise Specified, All Units of Measure are Each
** Included in Hardware*

PlayCore Moving play forward.℠

Warning: During Installation, Hardware And Small Parts Are Choking Hazards For Young Children. Store Unused Parts Appropriately Until Assembly Is Completed. Once Assembly Is Completed, Remove Any Unused Parts From The Play Environment And Dispose/Save Them In A Secure Location.

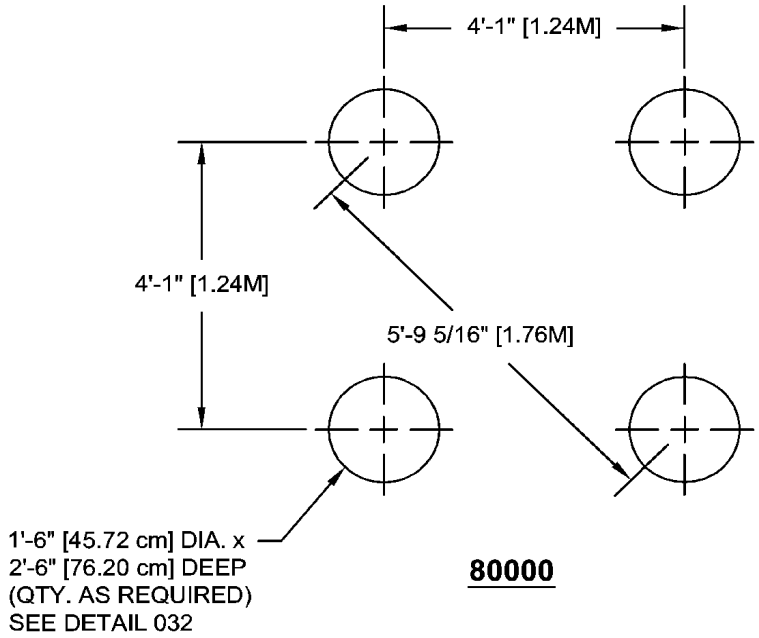

80000

Concrete Required
.10 Cubic Yards [.07 cm]
Per Upright Ground Hole

Note: Hole Depths Indicated on All Ground Plans are Measured From The Finished Surface. See Detail 032. All Footing Dimensions are Based on Level Finished Surface.

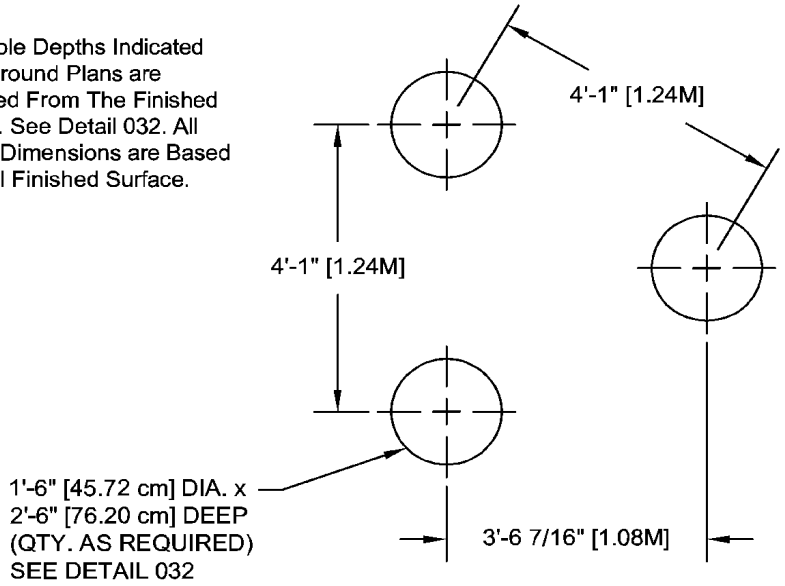

80001

GROUND PLANS

DETAILS -for- 80000 & 80001

Important

To Reduce the Risk of Clothing Entanglement in Compliance with ASTM F1487, Any Bolt End Protruding More Than Two Full Threads Beyond the Face of the Nut Shall Be Cut-Off Flush, Filed Smooth and Treated to Prevent Corrosion.

Note: After Assembly is Complete, Peen Tee-Nuts and Flatwashers to Match Radius of Pipe.

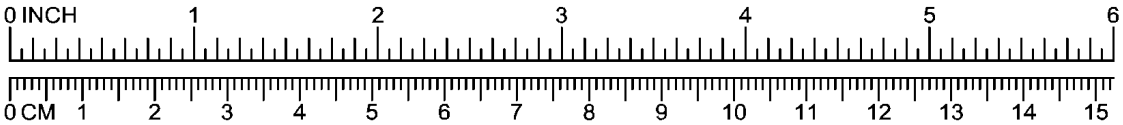

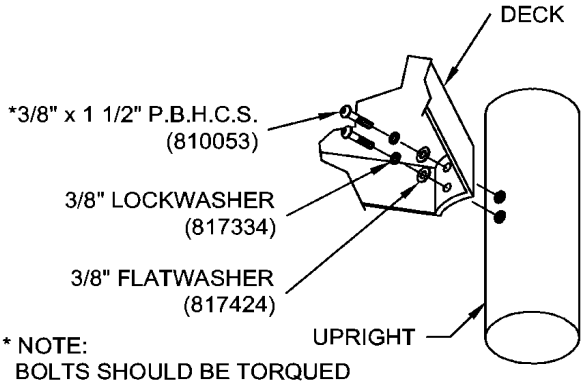

* NOTE:
BOLTS SHOULD BE TORQUED FROM 20-25 FT. LBS. FOR PROPER INSTALLATION.

* NOTE:
AFTER ASSEMBLY IS COMPLETED, PEEN FLATWASHERS TO MATCH RADIUS OF UPRIGHT.

030

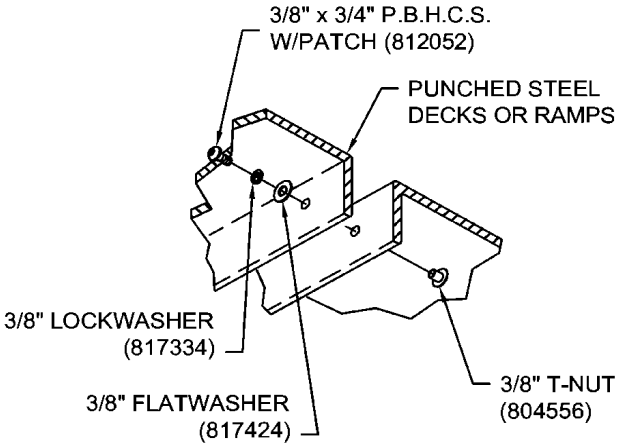

031

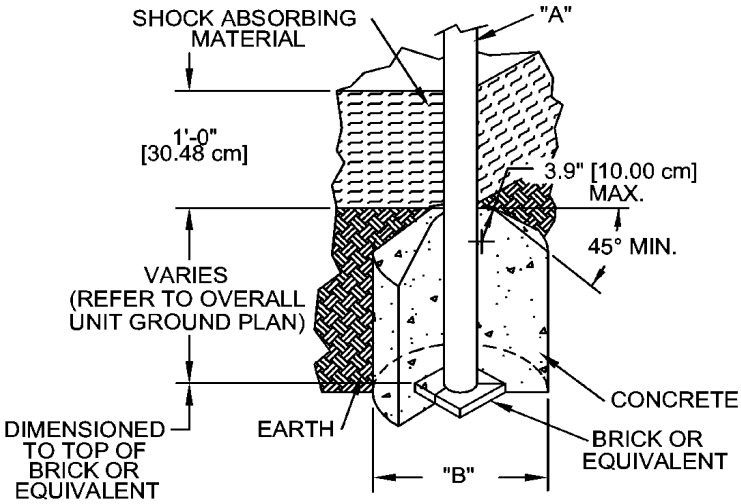

DIA. "A" (PIPE SIZE)	DIA. "B" (FOOTING SIZE)
1 1/16" [2.70 cm]	1'-2" [35.56 cm]
1 5/16" [3.33 cm]	1'-2" [35.56 cm]
1 5/8" [4.13 cm]	1'-2" [35.56 cm]
1 7/8" [4.83 cm]	1'-2" [35.56 cm]
2 3/8" [6.03 cm]	1'-2" [35.56 cm]
3 1/2" [8.89 cm]	1'-6" [45.72 cm]
5" [12.70 cm]	1'-6" [45.72cm]
TRACK RIDE & SWINGS	
5" [12.70 cm]	2'-0" [60.96 cm]
TREE SCAPE	
5" [12.70 cm]	4'-0" [121.92 cm]

NOTES:
-SLOPED FOOTING IS A REQUIREMENT OF EUROPEAN STANDARD EN1176-1 ONLY
-SUGGESTED MINIMUM CONCRETE RATING: 3000 PSI

032

SHOCK ABSORBING PROPERTIES OF SURFACING MATERIALS VARY. IF YOU DETERMINE THAT LESS THAN 1'-0" [30.48cm] OF SURFACING IS REQUIRED, MAKE UP THE DIFFERENCE IN ELEVATION WITH EARTH, BEFORE APPLYING SURFACING.

NEW POWERSCAPE® PLUS

A PLAYCORE COMPANY GameTime®

Enriching Childhood Through Play™

1-800-235-2440

ISSUED/REVISED: 8/15/13

80656 ACCESS ATTACHMENT

⬡ = INSTALLATION DETAIL

◯ = PARTS LIST REFERENCE

80656 ATTACHES TO 80653, 80655, 90029, 90031 & 90032
80657 ATTACHES TO 80654, 90030 & 90033

INSTALLATION INSTRUCTIONS

1. Before assembling this equipment, read the enclosed *INSTALLATION INSTRUCTIONS* in the installation booklet; follow all the instructions during installation.
2. Assemble parts as shown in the *ASSEMBLY DRAWING*. Refer to the assembly details for the specific hardware required in each connection.

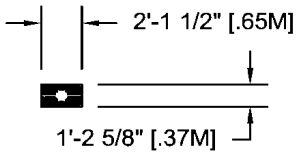

TOP VIEW

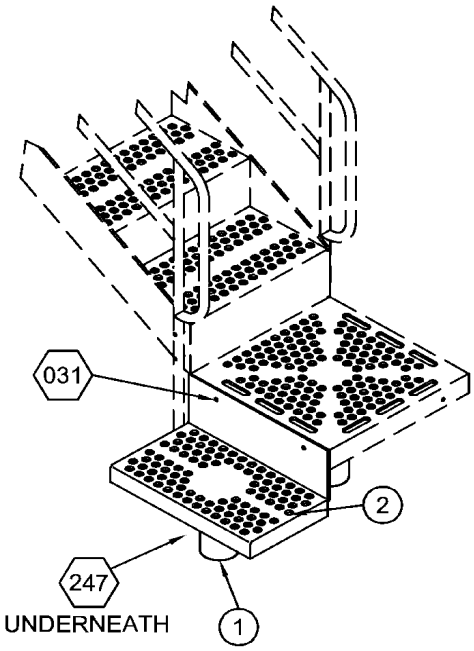

ASSEMBLY DRAWING

PARTS LIST

REF. NO.	DESCRIPTION	No. REQUIRED 80656	No. REQUIRED 80657	PART NUMBER
1	Platform Support	1	0	160701
1	Platform Support	0	1	160704
2	Platform	1	1	160693
	Hardware Complete	1	1	166069
	3/8" x 3/4" P.B.H.C.S. w/Patch	5	5	812052*
	3/8" Lockwasher	5	5	817334*
	3/8" Flatwasher (1-1/4" O.D.)	2	2	817424*
	3/8" Tee -Nut (Spanner)	5	5	804556*

Unless Otherwise Specified, All Units of Measure are Each
**** Included in Hardware***

Warning: During Installation, Hardware And Small Parts Are Choking Hazards For Young Children. Store Unused Parts Appropriately Until Assembly Is Completed. Once Assembly Is Completed, Remove Any Unused Parts From The Play Environment And Dispose/Save Them In A Secure Location.
Note: Loctite (supplied by others) should be used on all threaded hardware.

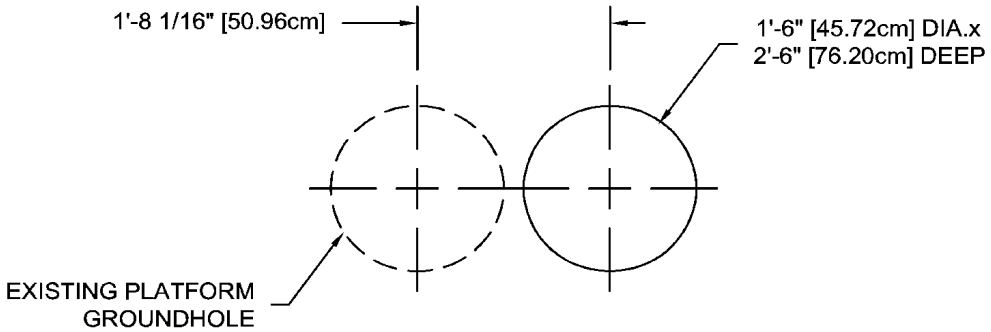

CONCRETE REQUIRED:
.10 CUBIC YARDS
[.08 CUBIC METERS]

NOTE: HOLE DEPTHS INDICATED ON ALL GROUND PLANS ARE MEASURED FROM THE FINISHED SURFACE. SEE DETAIL 032. ALL FOOTING DIMENSIONS ARE BASED ON LEVEL FINISHED SURFACE.

GROUND PLAN

DETAILS -for-

80656 & 80657

Important

To Reduce the Risk of Clothing Entanglement in Compliance with ASTM F1487, Any Bolt End Protruding More Than Two Full Threads Beyond the Face of the Nut Shall Be Cut-Off Flush, Filed Smooth and Treated to Prevent Corrosion.

Note: After Assembly is Complete, Peen Tee-Nuts and Flatwashers to Match Radius of Pipe.

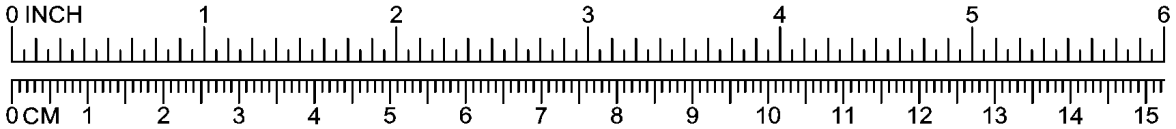

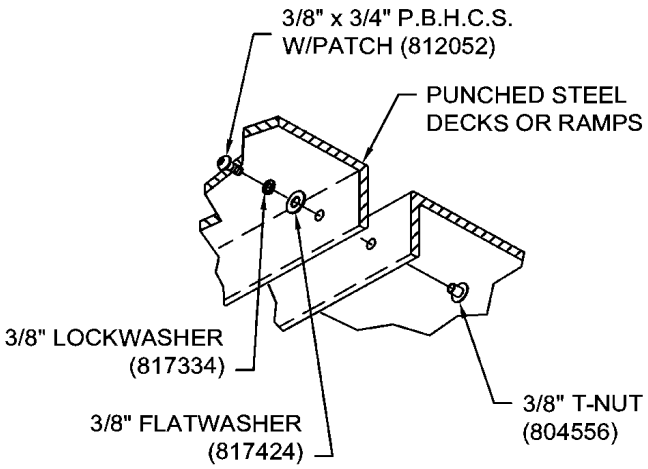

031

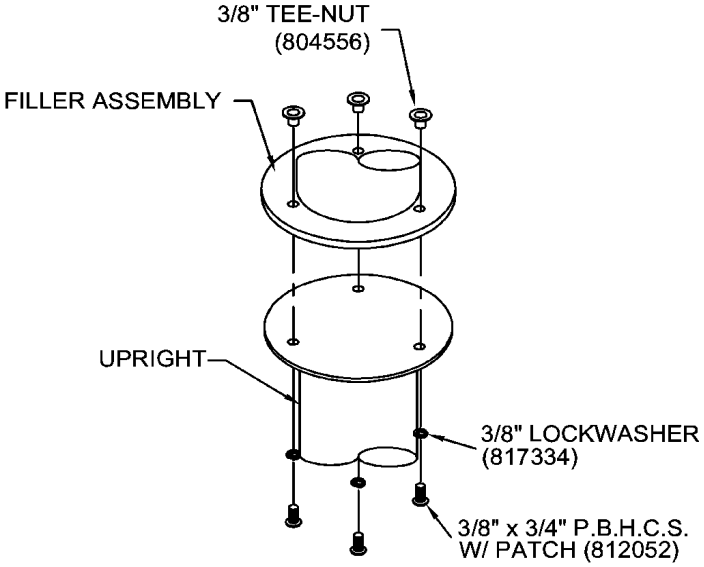

247

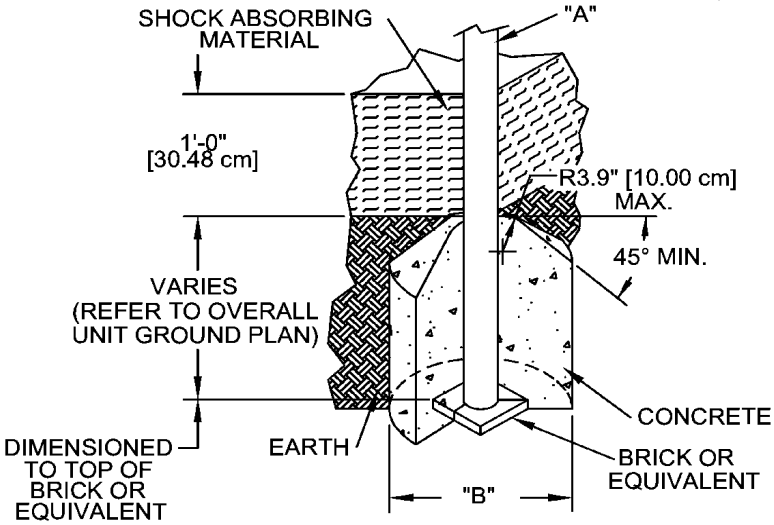

DIA. "A" (PIPE SIZE)	DIA. "B" (FOOTING SIZE)
1 1/16" [2.70 cm]	1'-2" [35.56 cm]
1 5/16" [3.33 cm]	1'-2" [35.56 cm]
1 5/8" [4.13 cm]	1'-2" [35.56 cm]
1 7/8" [4.83 cm]	1'-2" [35.56 cm]
2 3/8" [6.03 cm]	1'-2" [35.56 cm]
3 1/2" [8.89 cm]	1'-6" [45.72 cm]
5" [12.70 cm]	1'-6" [45.72cm]
TRACK RIDE & SWINGS	
5" [12.70 cm]	2'-0" [60.96 cm]
TREE SCAPE	
5" [12.70 cm]	4'-0" [121.92 cm]

NOTES:
-SLOPED FOOTING IS A REQUIREMENT OF EUROPEAN STANDARD EN1176-1 ONLY
-SUGGESTED MINIMUM CONCRETE RATING: 3000 PSI

032

SHOCK ABSORBING PROPERTIES OF SURFACING MATERIALS VARY. IF YOU DETERMINE THAT LESS THAN 1'-0" [30.48cm] OF SURFACING IS REQUIRED, MAKE UP THE DIFFERENCE IN ELEVATION WITH EARTH, BEFORE APPLYING SURFACING.

NEW! POWERSCAPE® PLUS

A PLAYCORE COMPANY GameTime®

Enriching Childhood Through Play.

1-800-235-2440

ISSUED/REVISED: 02/02/16

80687

HANDHOLD KICK PLATE PKG.

= INSTALLATION DETAIL

= PARTS LIST REFERENCE

INSTALLATION INSTRUCTIONS

Note: Assemble parts as shown in the Assembly Drawing. Refer to the assembly details for the specific hardware required in each connection.

1.Before assembling this equipment, read the enclosed *Installer Instructions* in the installation booklet; follow all the instructions during assembly.

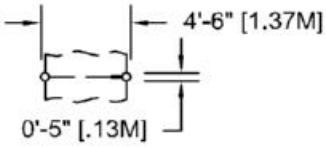

TOP VIEW

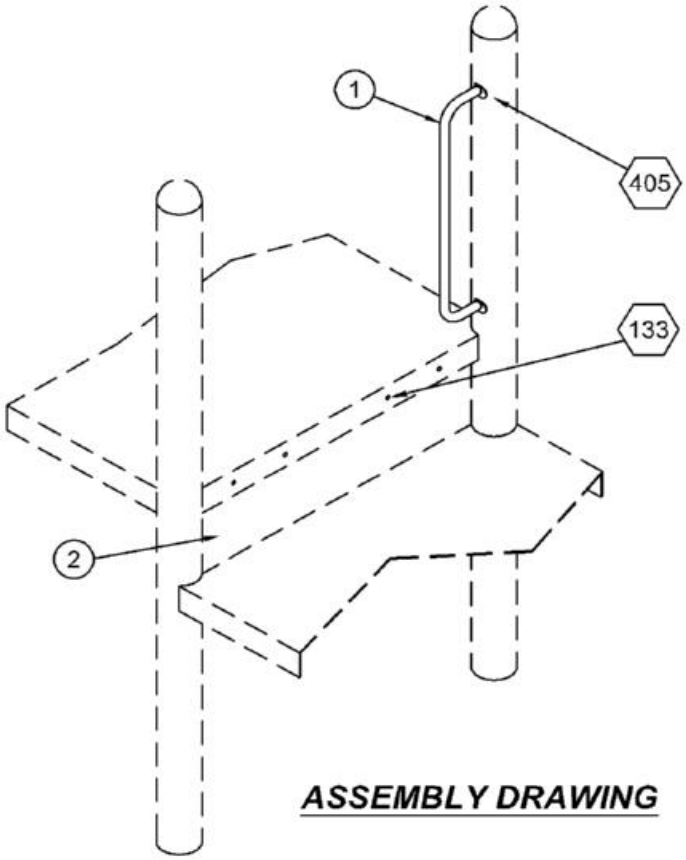

ASSEMBLY DRAWING

PARTS LIST

REF NO.	DESCRIPTION	NO. REQ'D.	PART NUMBER
1	Handhold Ass'y	1	211395
2	Filler/Kick Plate	1	139253
	Hardware Complete	1	177009
	3/8" x 1 1/4" P.B.H.C.S. w/Patch	4	812051*
	3/8" Lockwasher	12	817334*
	3/8" x 1" P.B.H.C.S. w/Patch	8	812050*
	3/8" Flatwasher (1 1/4" O.D.)	8	817424*
	3/8" Hex Nut	8	804053*

Unless Otherwise Specified, All Units of Measure are Each
** Included in Hardware*

Warning: During Installation, Hardware And Small Parts Are Choking Hazards For Young Children. Store Unused Parts Appropriately Until Assembly Is Completed. Once Assembly Is Completed, Remove Any Unused Parts From The Play Environment And Dispose/Save Them In A Secure Location.

Note: Loctite (supplied by others) should be used on all threaded hardware.

DETAILS -for-
80687

Important

To Reduce the Risk of Clothing Entanglement in Compliance with ASTM F1487, Any Bolt End Protruding More Than Two Full Threads Beyond the Face of the Nut Shall Be Cut-Off Flush, Filed Smooth and Treated to Prevent Corrosion.

Note: After Assembly is Complete, Peen Tee-Nuts and Flatwashers to Match Radius of Pipe.

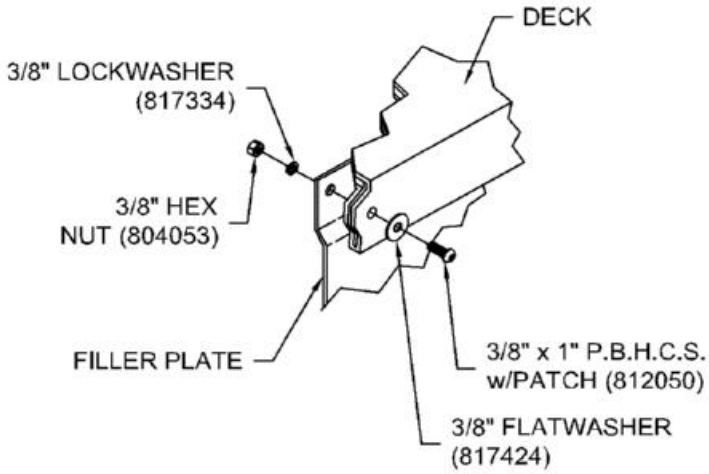

133

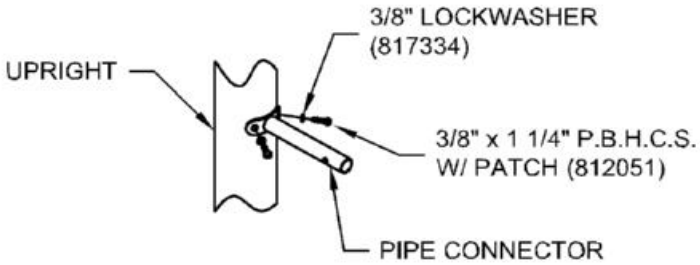

405

NEW POWERSCAPE® PLUS

GameTime® A PLAYCORE Company

1-800-235-2440

ISSUED/REVISED: 01/23/14

80729
12" STEPPED PLATFORM

⬡ = INSTALLATION DETAIL

○ = PARTS LIST REFERENCE

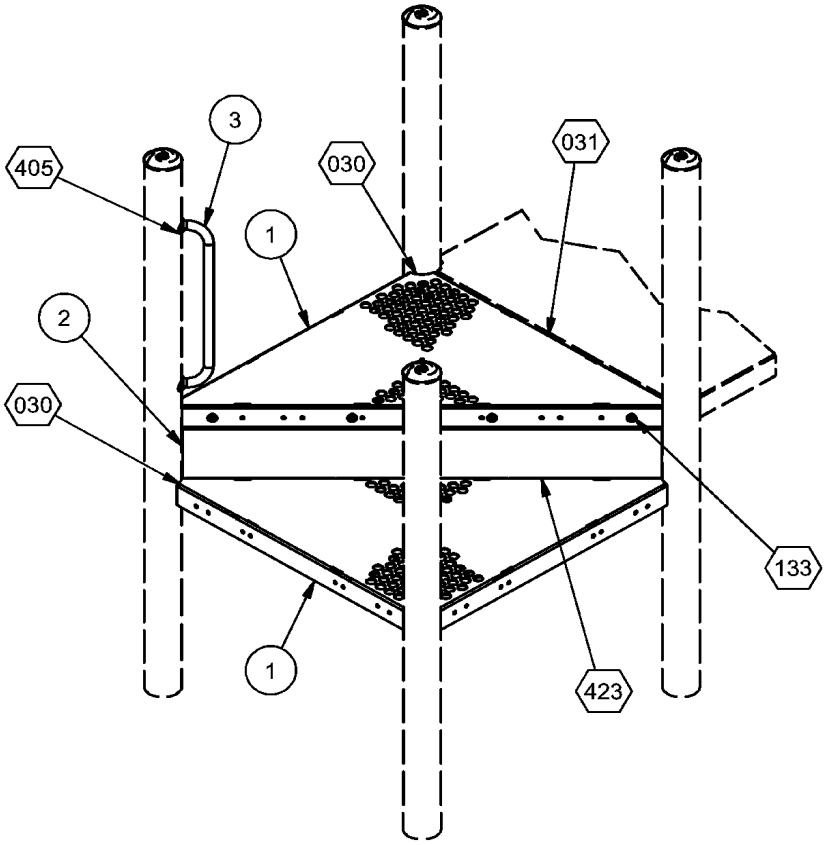

INSTALLATION INSTRUCTIONS

1. Before assembling this equipment, read the enclosed Installer Instructions in the Installation Booklet; follow all the instructions during assembly.
2. Assemble parts as shown in the Assembly Drawing. Refer to the assembly details for the specific hardware required in each connection.
3. Loctite (supplied by others) should be used on all non-patch hardware.
4. When Decks are at the same height shown in Assembly Drawing, fasten together using Detail 031. Note: Remove vinyl from the two inside holes, ream with 1/2" bit.

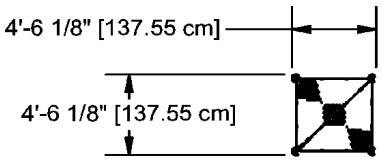

SUGGESTED MINIMUM CONCRETE RATING: 3000 PSI

SLOPED FOOTING IS A REQUIREMENT OF EUROPEAN STANDARD EN1176-1.

CONCRETE REQUIRED:
.39 CUBIC YARDS
[.30 CUBIC METERS]

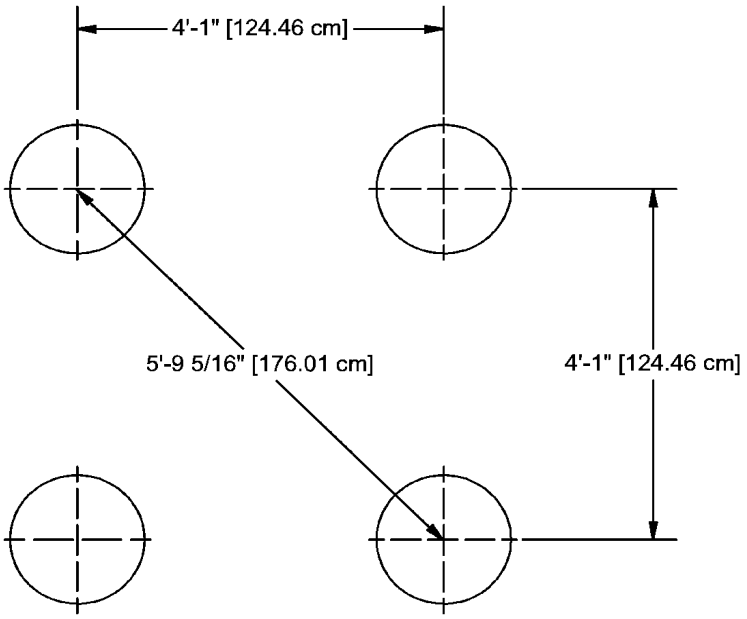

GROUND PLAN

NOTE: HOLE DEPTHS INDICATED ON ALL GROUND PLANS ARE MEASURE FROM THE FINISHED SURFACE. ALL FOOTING DIMENSIONS ARE BASED ON LEVEL FINISHED SURFACE.

Parts List			
ITEM	DESCRIPTION	QTY	PART NUMBER
1	STEPPED PLATFORM	2	176223
2	FILLER/KICKPLATE	1	176230
3	HANDHOLD	1	207648
	HARDWARE COMPLETE	1	177007
	3/8" x 1 1/2" P.B.H.C.S.	12	810053
	3/8" LOCKWASHER	24	817334
	3/8" FLAT WASHER (1 1/4" O.D.)	20	817424
	3/8" x 1" P.B.H.C.S. w/PATCH	4	812050
	3/8" HEX NUT	4	804053
	3/8" x 3/4" P.B.H.C.S. w/PATCH	4	812052
	3/8" T-NUT	4	804556
	3/8" x 1 1/4" P.B.H.C.S. w/PATCH	4	812051

Unless Otherwise Specified, All Units of Measure are Each
** Included in Hardware*

Warning: During Installation, Hardware And Small Parts Are Choking Hazards For Young Children. Store Unused Parts Appropriately Until Assembly Is Completed. Once Assembly Is Completed, Remove Any Unused Parts From The Play Environment And Dispose/Save Them In A Secure Location.

Note: Peen Tee-Nuts and Flatwashers to match radius of pipe after assembly is complete.

Note: Loctite (supplied by others) should be used on any non-patch hardware.

DETAILS -for-
80729

IMPORTANT

TO REDUCE THE RISK OF CLOTHING ENTANGLEMENT IN COMPLIANCE WITH ASTM F1487, ANY BOLT END PROTRUDING MORE THAN TWO FULL THREADS BEYOND THE FACE OF THE NUT SHALL BE CUT-OFF FLUSH, FILED SMOOTH AND TREATED TO PREVENT CORROSION.

NOTE: LOCTITE (SUPPLIED BY OTHERS) SHOULD BE USED ON ALL THREADED HARDWARE.

NOTE: AFTER ASSEMBLY IS COMPLETE, PEEN TEE-NUTS AND FLATWASHERS TO MATCH RADIUS OF PIPE.

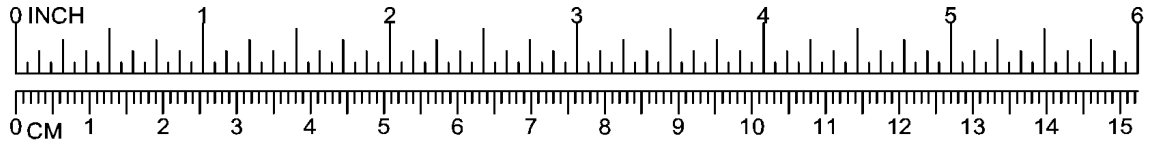

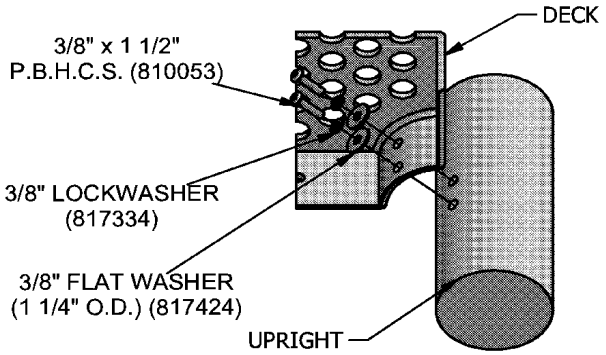

*NOTE:
BOLTS SHOULD BE TORQUED FROM 20-25 FT. LBS. FOR PROPER INSTALLATION.

*NOTE:
AFTER ASSEMBLY IS COMPLETED, PEEN FLATWASHERS TO MATCH RADIUS OF UPRIGHT.

030

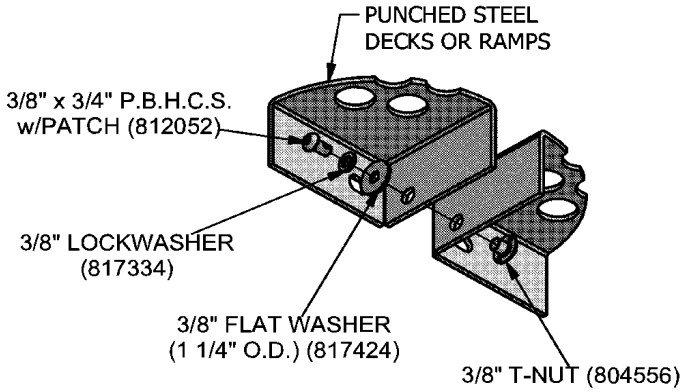

031

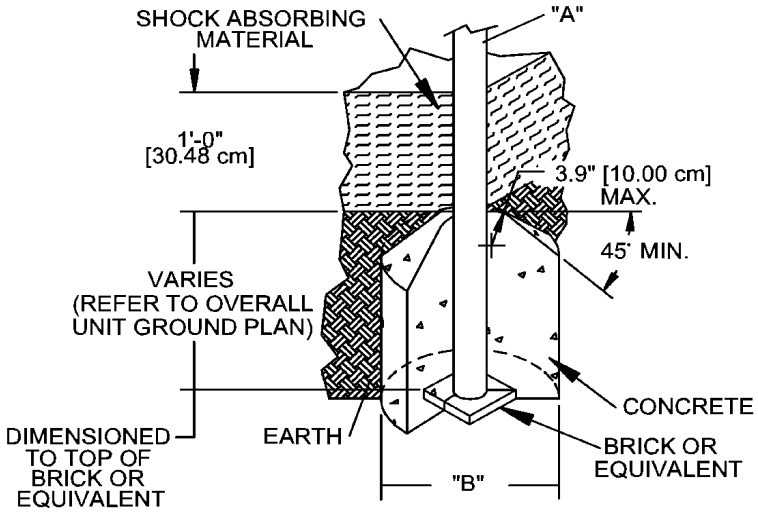

DIA. "A" (PIPE SIZE)	DIA. "B" (FOOTING SIZE)
1 1/16" [2.70 cm]	1'-2" [35.56 cm]
1 5/16" [3.33 cm]	1'-2" [35.56 cm]
1 5/8" [4.13 cm]	1'-2" [35.56 cm]
1 7/8" [4.83 cm]	1'-2" [35.56 cm]
2 3/8" [6.03 cm]	1'-2" [35.56 cm]
3 1/2" [8.89 cm]	1'-6" [45.72 cm]
5" [12.70 cm]	1'-6" [45.72cm]
TRACK RIDE & SWINGS	
5" [12.70 cm]	2'-0" [60.96 cm]
TREE SCAPE	
5" [12.70 cm]	4'-0" [121.92 cm]

NOTES:
-SLOPED FOOTING IS A REQUIREMENT OF EUROPEAN STANDARD EN1176-1 ONLY
-SUGGESTED MINIMUM CONCRETE RATING: 3000 PSI

032

SHOCK ABSORBING PROPERTIES OF SURFACING MATERIALS VARY. IF YOU DETERMINE THAT LESS THAN 1'-0" [30.48cm] OF SURFACING IS REQUIRED, MAKE UP THE DIFFERENCE IN ELEVATION WITH EARTH, BEFORE APPLYING SURFACING.

DETAILS -for-
80729

*I*MPORTANT

TO REDUCE THE RISK OF CLOTHING ENTANGLEMENT IN COMPLIANCE WITH ASTM F1487, ANY BOLT END PROTRUDING MORE THAN TWO FULL THREADS BEYOND THE FACE OF THE NUT SHALL BE CUT-OFF FLUSH, FILED SMOOTH AND TREATED TO PREVENT CORROSION.

NOTE: LOCTITE (SUPPLIED BY OTHERS) SHOULD BE USED ON ALL THREADED HARDWARE.

NOTE: AFTER ASSEMBLY IS COMPLETE, PEEN TEE-NUTS AND FLATWASHERS TO MATCH RADIUS OF PIPE.

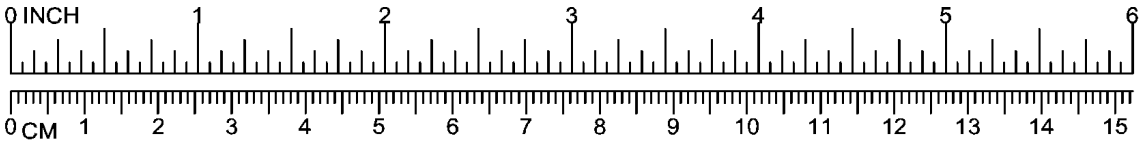

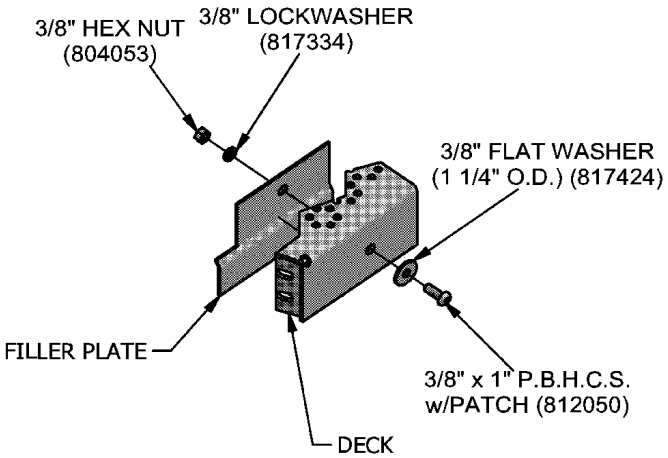

133

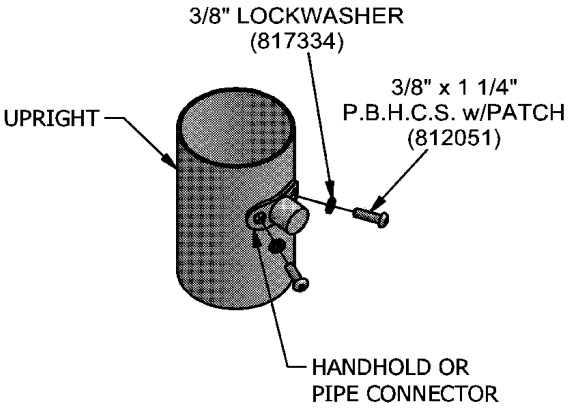

405

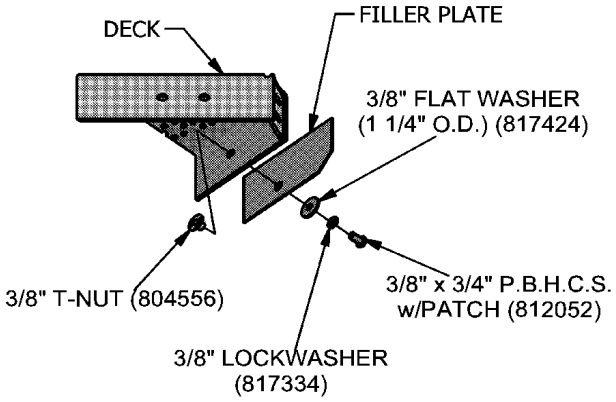

423

NEW! POWERSCAPE® PLUS

A PLAYCORE COMPANY GameTime®

Enriching Childhood Through Play™

1-800-235-2440

ISSUED/REVISED: 9/13/12

81488

'S' HORIZONTAL LOOP LADDER

= INSTALLATION DETAIL

= PARTS LIST REFERENCE

This play equipment is designed for CHILDREN 5 TO 12 YEARS OLD

Adult supervision is recommended

Enriching Childhood Through Play™ www.gametime.com

LINK	**81488**
REVERSE LINK	**81493**

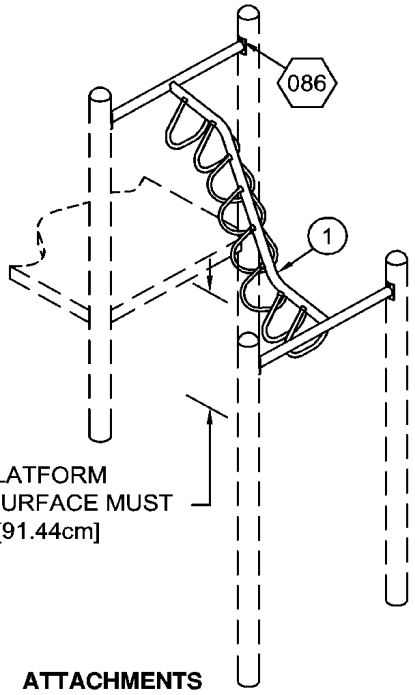

ATTACHMENTS

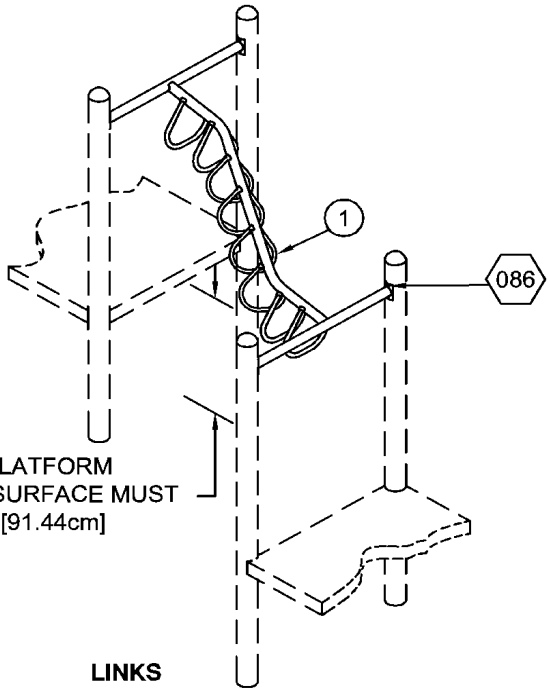

LINKS

INSTALLATION INSTRUCTIONS

Note: Assemble parts as shown in the *Assembly Drawing*. Refer to the assembly details for the specific hardware required in each connection.

1.Before assembling this equipment, read the enclosed *Installer Instructions* in the installation booklet; follow all the instructions during assembly.

ASSEMBLY DRAWINGS

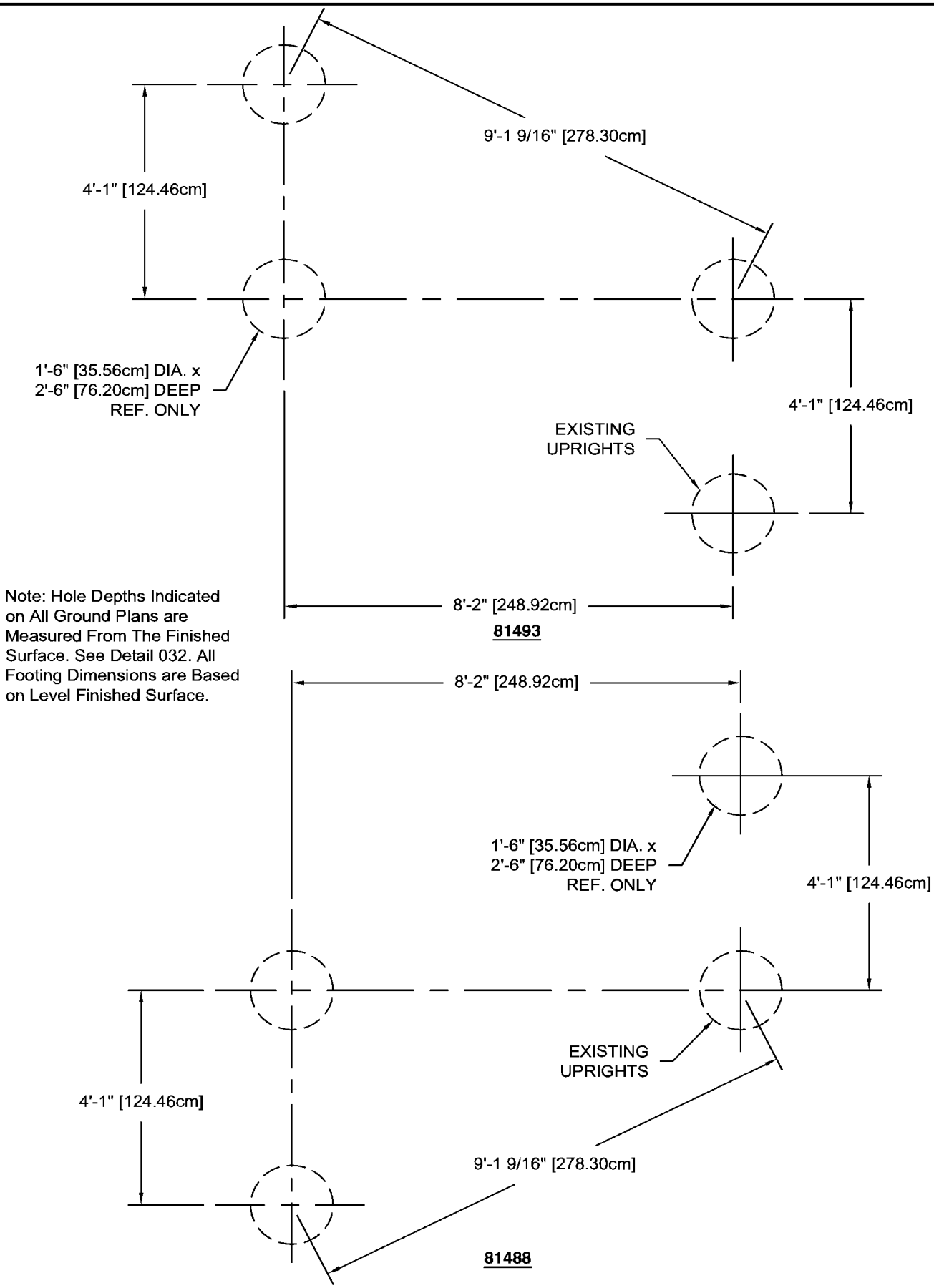

Note: Hole Depths Indicated on All Ground Plans are Measured From The Finished Surface. See Detail 032. All Footing Dimensions are Based on Level Finished Surface.

GROUND PLANS

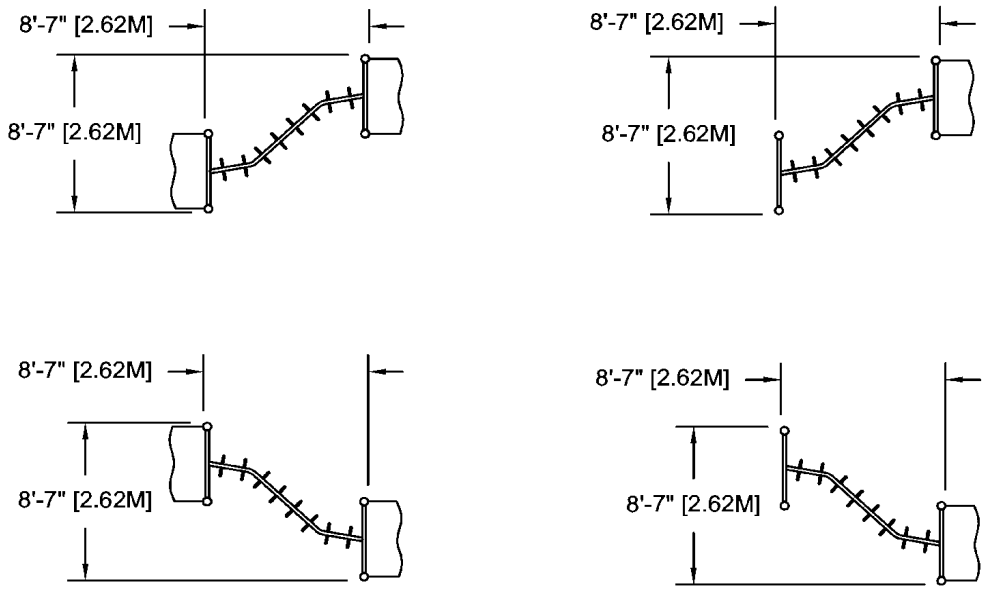

TOP VIEWS

PARTS LIST

REF NO.	DESCRIPTION	81488	81493	PART NUMBER
1	'S' Loop Ladder	1	0	160449
1	'S' Loop Ladder	0	1	160527
	Hardware Complete	1	1	164706
	3/8" x 1" P.B.H.C.S. w/Patch	8	8	812050*
	3/8" Lockwasher	8	8	817334*

Unless Otherwise Specified, All Units of Measure are Each
** Included in Hardware*

Warning: During Installation, Hardware And Small Parts Are Choking Hazards For Young Children. Store Unused Parts Appropriately Until Assembly Is Completed. Once Assembly Is Completed, Remove Any Unused Parts From The Play Environment And Dispose/Save Them In A Secure Location.
Note: Loctite (supplied by others) should be used on all threaded hardware.

DETAILS -for-
81488 & 81493

IMPORTANT

TO REDUCE THE RISK OF CLOTHING ENTANGLEMENT IN COMPLIANCE WITH ASTM F1487, ANY BOLT END PROTRUDING MORE THAN TWO FULL THREADS BEYOND THE FACE OF THE NUT SHALL BE CUT-OFF FLUSH, FILED SMOOTH AND TREATED TO PREVENT CORROSION.

NOTE: AFTER ASSEMBLY IS COMPLETE, PEEN TEE-NUTS AND FLATWASHERS TO MATCH RADIUS OF PIPE.

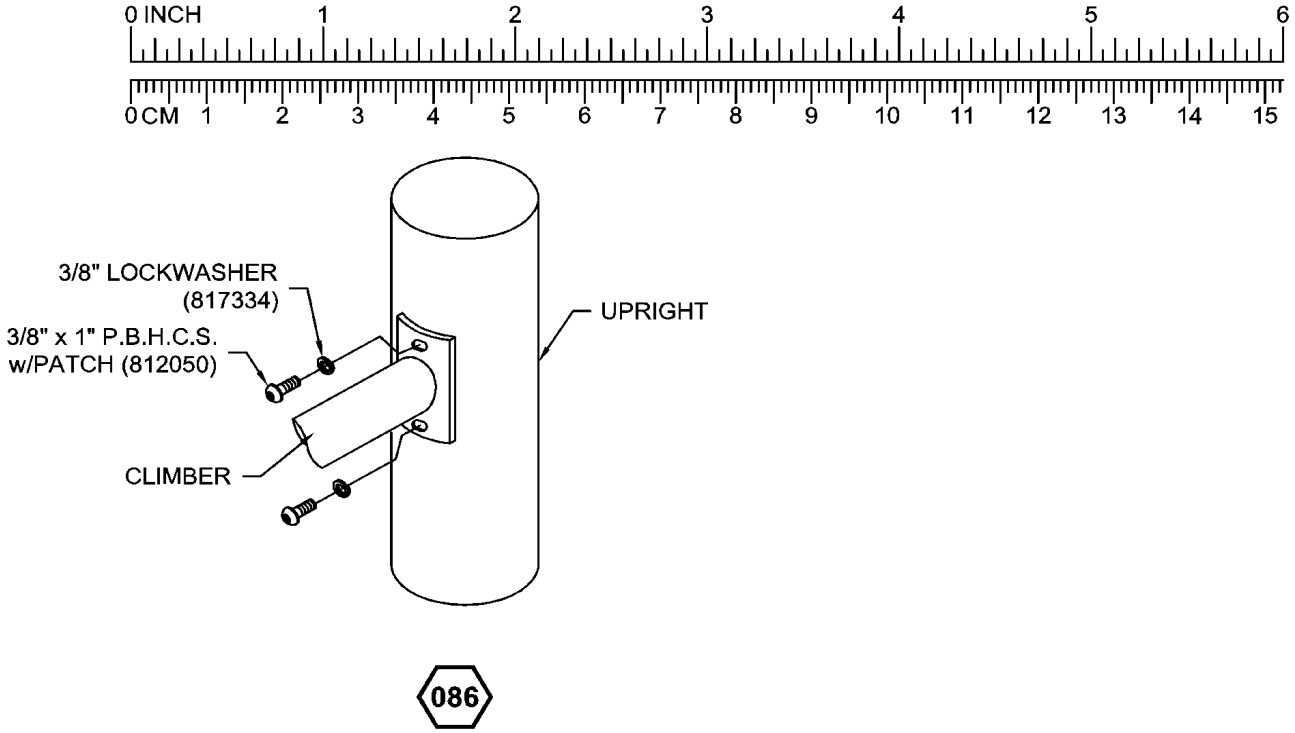

NEW POWER SCAPE® PLUS

A PLAYCORE COMPANY GameTime®

Enriching Childhood Through Play™

1-800-235-2440

ISSUED/REVISED: 9/11/12

81699
BONGOS

⬡ = INSTALLATION DETAIL

○ = PARTS LIST REFERENCE

INSTALLATION INSTRUCTIONS

1. Before assembling this equipment, read the enclosed INSTALLATION INSTRUCTIONS in the installation booklet; follow all the instructions during installation.
2. Assemble parts as shown in the ASSEMBLY DRAWING. Refer to the assembly details for the specific hardware required in each connection.

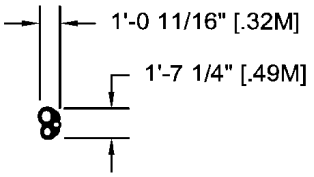

TOP VIEW

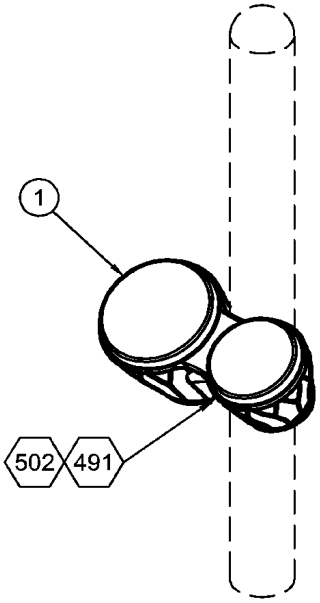

ASSEMBLY DRAWING

PARTS LIST

REF NO.	DESCRIPTION	NO. REQ'D	PART NUMBER
1	Bongos	1	177954
	Hardware Complete	1	178081
	3/8" x 1" P.B.H.C.S. w/Patch	4	812050*
	3/8" Lockwasher	4	817334*
	3/8" Flatwasher	4	817424*

Unless Otherwise Specified, All Units of Measure are Each
** Included in Hardware*

Warning: During Installation, Hardware And Small Parts Are Choking Hazards For Young Children. Store Unused Parts Appropriately Until Assembly Is Completed. Once Assembly Is Completed, Remove Any Unused Parts From The Play Environment And Dispose/Save Them In A Secure Location.

Note: Loctite (supplied by others) should be used on all threaded hardware.

DETAILS -for-
81699

Important

To Reduce the Risk of Clothing Entanglement in Compliance with ASTM F1487, Any Bolt End Protruding More Than Two Full Threads Beyond the Face of the Nut Shall Be Cut-Off Flush, Filed Smooth and Treated to Prevent Corrosion.

Note: After Assembly is Complete, Peen Tee-Nuts and Flatwashers to Match Radius of Pipe.

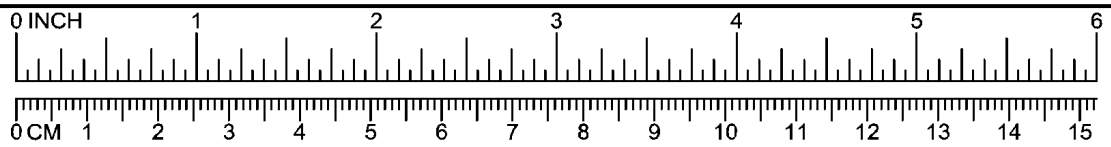

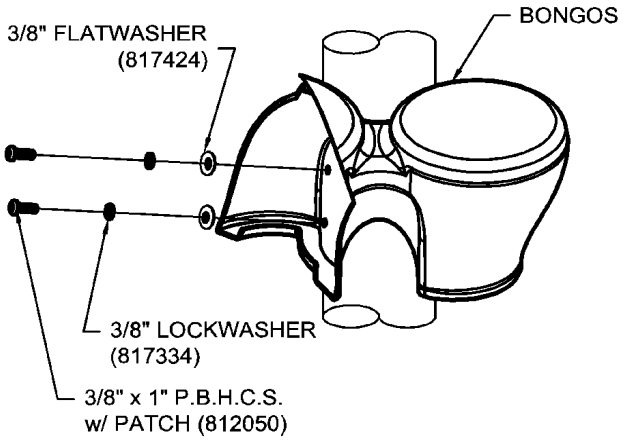

491

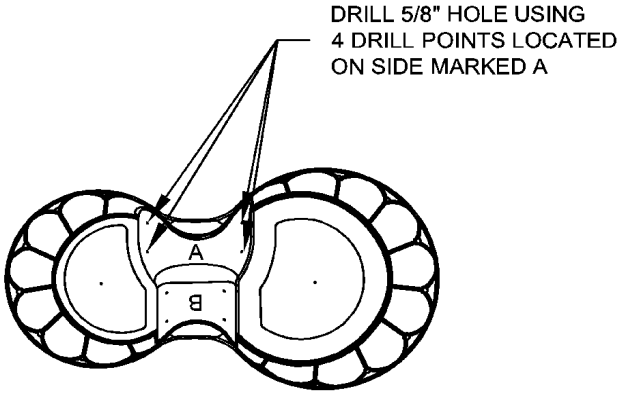

502

NEW POWERSCAPE® PLUS

GameTime®

A PLAYCORE Company

1-800-235-2440

ISSUED/REVISED: 8/17/16

81766 LEAF SEAT

⬡ = INSTALLATION DETAIL

○ = PARTS LIST REFERENCE

INSTALLATION INSTRUCTIONS

1. Before assembling this equipment, read the enclosed INSTALLATION INSTRUCTIONS in the installation booklet; follow all the instructions during installation.
2. Assemble parts as shown in the ASSEMBLY DRAWING. Refer to the assembly details for the specific hardware required in each connection.

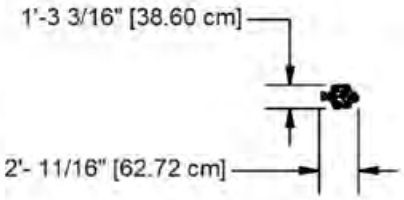

TOP VIEW

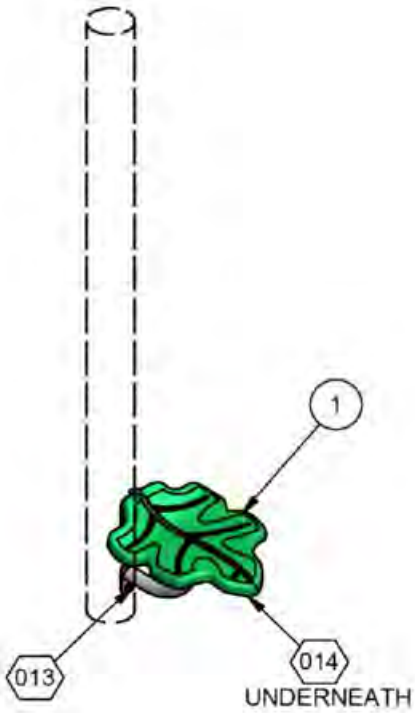

ASSEMBLY VIEW

Parts List			
REF.	DESCRIPTION	QTY	PART NUMBER
1	LEAF STEP	1	201413
2	LEAF BRACKET	1	201695
	HARDWARE COMPLETE	1	202350
	3/8" x 1" P.B.H.C.S. w/PATCH	4	812050*
	3/8" x 1 1/4" P.B.H.C.S. w/PATCH	2	812051*
	3/8" LOCKWASHER	6	817334*
	3/8" FLAT WASHER	6	817410*

Unless Otherwise Specified, All Units of Measure are Each
** Included in Hardware*

Warning: During Installation, Hardware And Small Parts Are Choking Hazards For Young Children. Store Unused Parts Appropriately Until Assembly Is Completed. Once Assembly Is Completed, Remove Any Unused Parts From The Play Environment And Dispose/Save Them In A Secure Location.

Note: Peen Tee-Nuts and Flatwashers to match radius of pipe after assembly is complete.

DETAILS -for-
81766

Important

To Reduce the Risk of Clothing Entanglement in Compliance with ASTM F1487, Any Bolt End Protruding More Than Two Full Threads Beyond the Face of the Nut Shall Be Cut-Off Flush, Filed Smooth and Treated to Prevent Corrosion.

Note: Loctite (Supplied by Others) Should be Used on All Threaded Hardware.

Note: After Assembly is Complete, Peen Tee-Nuts and Flatwashers to Match Radius of Pipe.

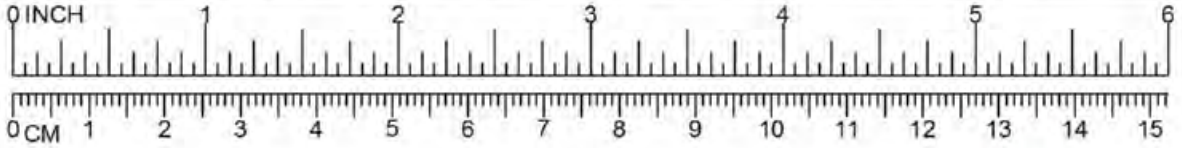

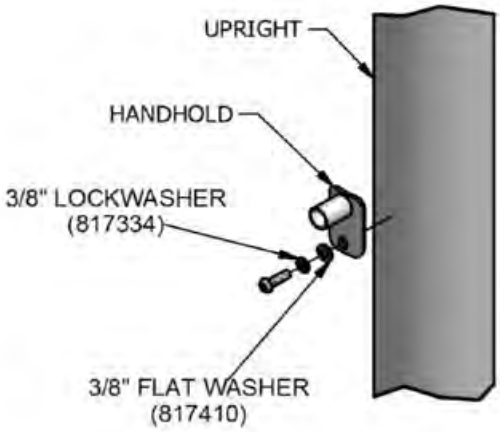

013

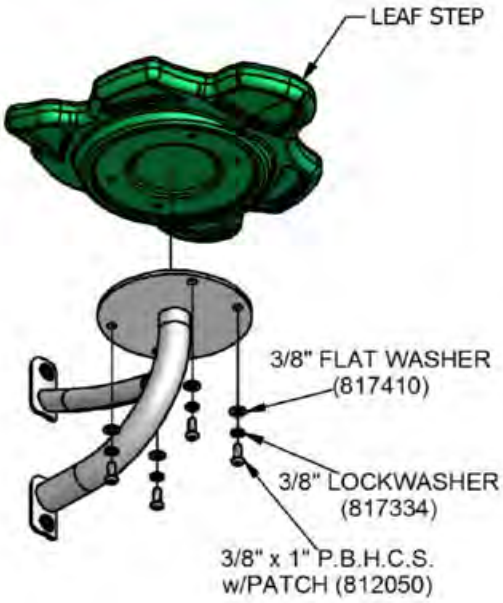

014

PowerScape

GameTime

A PLAYCORE Company

1-800-235-2440

ISSUED/REVISED: 08/17/16

90150 SINGLE VINE CLIMBER ATTACHMENT

= INSTALLATION DETAIL

= PARTS LIST REFERENCE

This play equipment is designed for CHILDREN 5 TO 12 YEARS OLD

Adult supervision is recommended

SINGLE VINE CLIMBER ATTACHMENT 90150
STANDARD DOUBLE VINE CLIMBER ATTACHMENT 90151

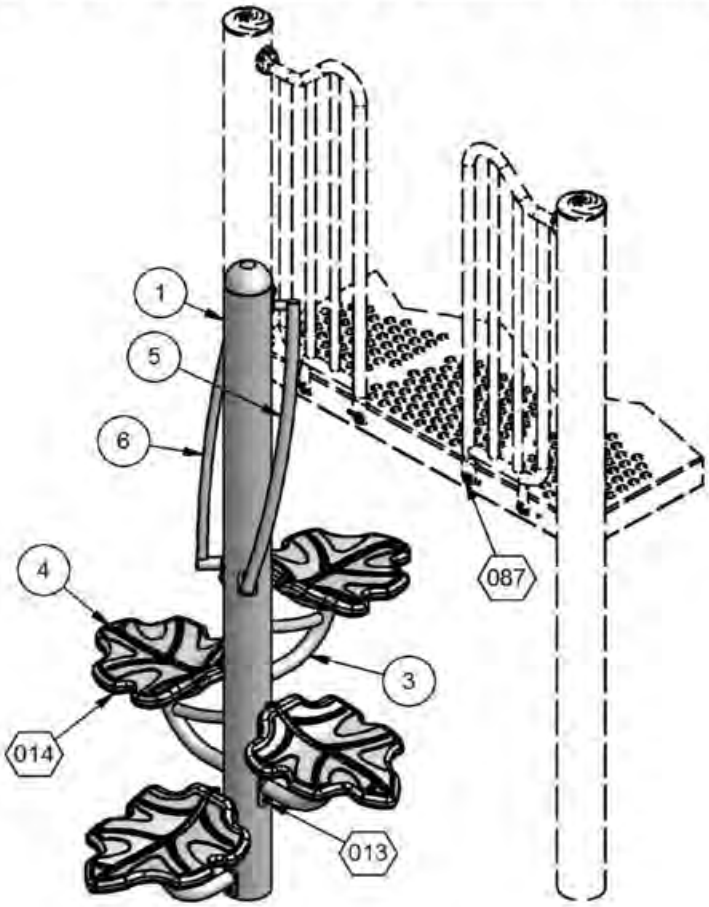

INSTALLATION INSTRUCTIONS

1. Before assembling this equipment, read the enclosed INSTALLER INSTRUCTIONS in the installation booklet; follow all the instructions during installation.
2. Assemble parts as shown in the ASSEMBLY DRAWING. Refer to the assembly details for the specific hardware required in each connection.

ASSEMBLY DRAWING
90150 SHOWN

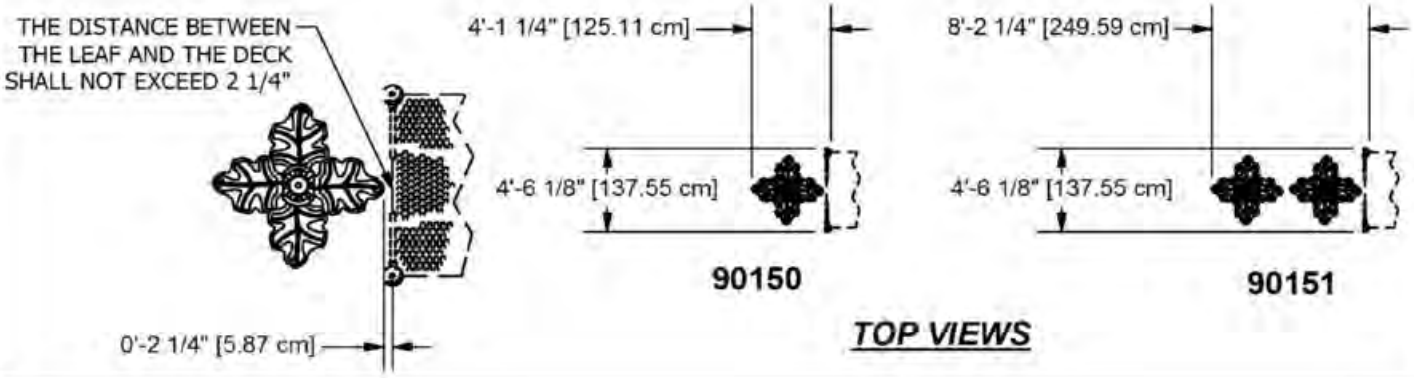

TOP VIEWS

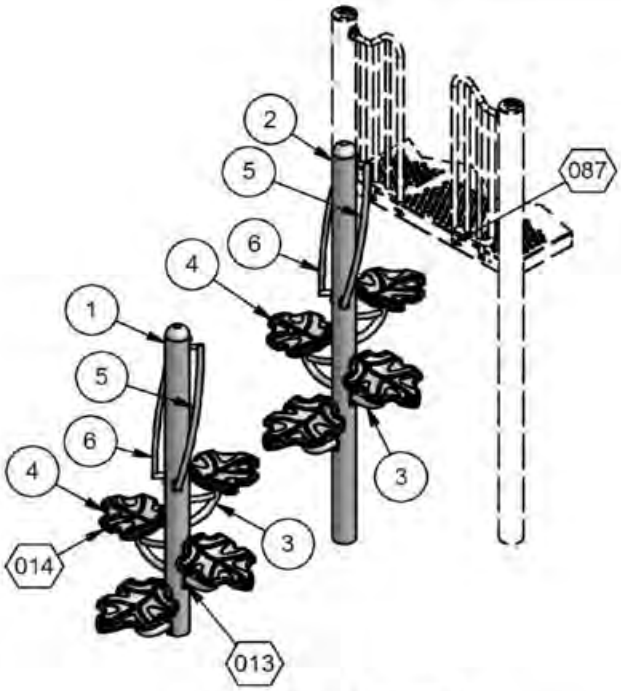

ASSEMBLY VIEW
90151 SHOWN

NOTE: HOLE DEPTHS INDICATED ON ALL GROUND PLANS ARE MEASURED FROM THE FINISHED SURFACE. SEE DETAIL 032. ALL FOOTING DIMENSIONS ARE BASED ON LEVEL FINISHED SURFACE.

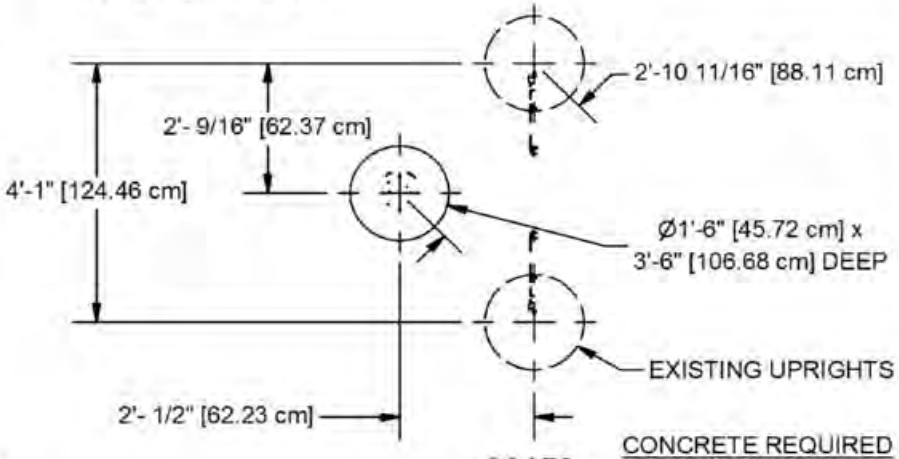

90150

CONCRETE REQUIRED
0.16 CUBIC YARDS
[0.13 CUBIC METERS]

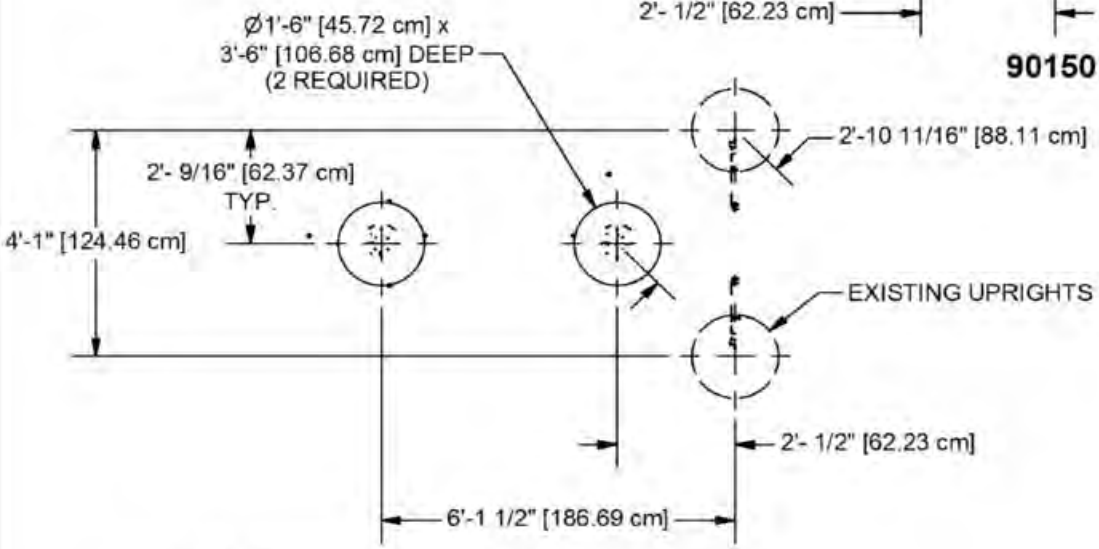

CONCRETE REQUIRED
0.33 CUBIC YARDS
[0.25 CUBIC METERS]

90151

GROUND PLANS

Parts List				
REF.	DESCRIPTION	90150	90151	PART NUMBER
1	5" GALV. PIPE w/CAP 10'	1	1	LIF9JE
2	5" GALV. PIPE w/CAP 12'	0	1	LIF7SY
3	LEAF BRACKET	4	8	201695
4	LEAF STEP	4	8	201413
5	HANDHOLD	1	2	201685
6	HANDHOLD REVERSE	1	2	202319
	HARDWARE COMPLETE	1	0	204362
	HARDWARE COMPLETE	0	1	204363
	3/8" x 3/4" P.B.H.C.S. w/PATCH	2	2	812052*
	3/8" x 1" P.B.H.C.S. w/PATCH	16	32	812050*
	3/8" x 1 1/4" P.B.H.C.S. w/PATCH	12	24	812051*
	3/8" FLAT WASHER (1 1/4" O.D.)	2	2	817424*
	3/8" FLAT WASHER	28	56	817410*
	3/8" LOCKWASHER	30	58	817334*
	3/8" T-NUT	2	2	804556*

Unless Otherwise Specified, All Units of Measure are Each
** Included in Hardware*

Warning: During Installation, Hardware And Small Parts Are Choking Hazards For Young Children. Store Unused Parts Appropriately Until Assembly Is Completed. Once Assembly Is Completed, Remove Any Unused Parts From The Play Environment And Dispose/Save Them In A Secure Location.

Note: Peen Tee-Nuts and Flatwashers to match radius of pipe after assembly is complete.

Note: Loctite (supplied by others) should be used on any non-patch hardware.

DETAILS -for-
90150 & 90151

*I*MPORTANT

TO REDUCE THE RISK OF CLOTHING ENTANGLEMENT IN COMPLIANCE WITH ASTM F1487, ANY BOLT END PROTRUDING MORE THAN TWO FULL THREADS BEYOND THE FACE OF THE NUT SHALL BE CUT-OFF FLUSH, FILED SMOOTH AND TREATED TO PREVENT CORROSION.

NOTE: LOCTITE (SUPPLIED BY OTHERS) SHOULD BE USED ON ALL THREADED HARDWARE.

NOTE: AFTER ASSEMBLY IS COMPLETE, PEEN TEE-NUTS AND FLATWASHERS TO MATCH RADIUS OF PIPE.

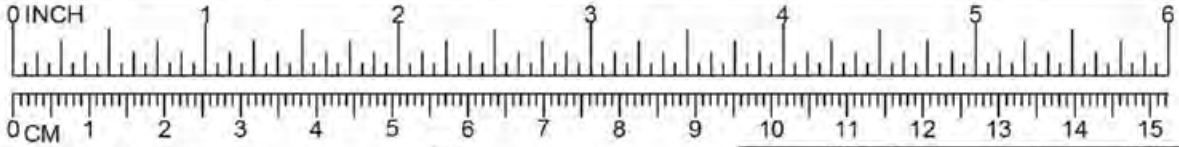

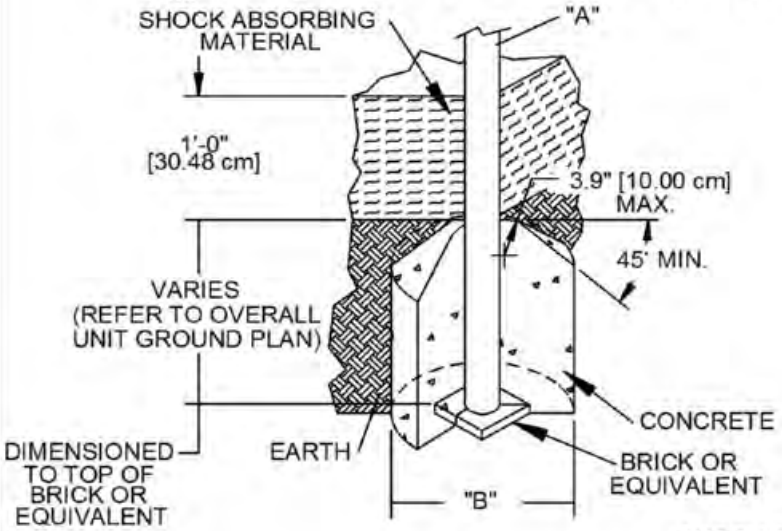

DIA. "A" (PIPE SIZE)	DIA. "B" (FOOTING SIZE)
1 1/16" [2.70 cm]	1'-2" [35.56 cm]
1 5/16" [3.33 cm]	1'-2" [35.56 cm]
1 5/8" [4.13 cm]	1'-2" [35.56 cm]
1 7/8" [4.83 cm]	1'-2" [35.56 cm]
2 3/8" [6.03 cm]	1'-2" [35.56 cm]
3 1/2" [8.89 cm]	1'-6" [45.72 cm]
5" [12.70 cm]	1'-6" [45.72cm]
TRACK RIDE & SWINGS	
5" [12.70 cm]	2'-0" [60.96 cm]
TREE SCAPE	
5" [12.70 cm]	4'-0" [121.92 cm]

NOTES:
- SLOPED FOOTING IS A REQUIREMENT OF EUROPEAN STANDARD EN1176-1 ONLY
- SUGGESTED MINIMUM CONCRETE RATING: 3000 PSI

032

SHOCK ABSORBING PROPERTIES OF SURFACING MATERIALS VARY. IF YOU DETERMINE THAT LESS THAN 1'-0" [30.48cm] OF SURFACING IS REQUIRED, MAKE UP THE DIFFERENCE IN ELEVATION WITH EARTH, BEFORE APPLYING SURFACING.

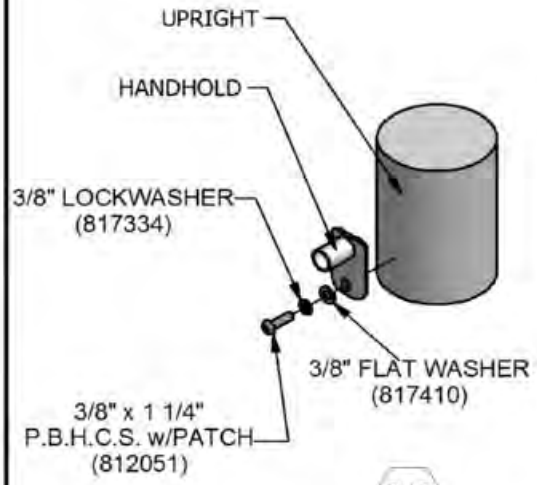

013

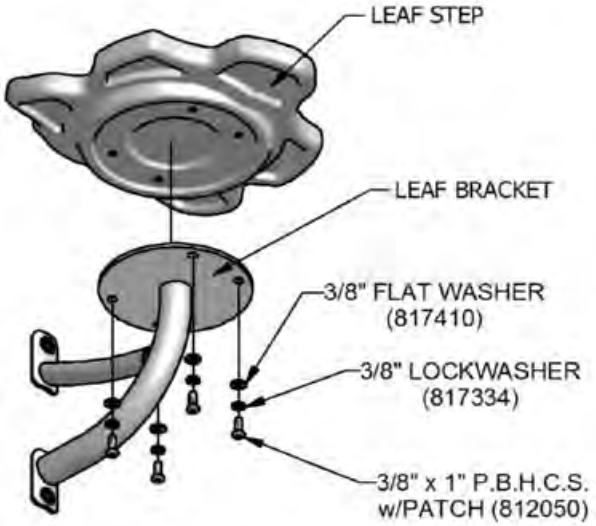

014

DETAILS -for-
90150 & 90151

*I*MPORTANT

TO REDUCE THE RISK OF CLOTHING ENTANGLEMENT IN COMPLIANCE WITH ASTM F1487, ANY BOLT END PROTRUDING MORE THAN TWO FULL THREADS BEYOND THE FACE OF THE NUT SHALL BE CUT-OFF FLUSH, FILED SMOOTH AND TREATED TO PREVENT CORROSION.

NOTE: LOCTITE (SUPPLIED BY OTHERS) SHOULD BE USED ON ALL THREADED HARDWARE.

NOTE: AFTER ASSEMBLY IS COMPLETE, PEEN TEE-NUTS AND FLATWASHERS TO MATCH RADIUS OF PIPE.

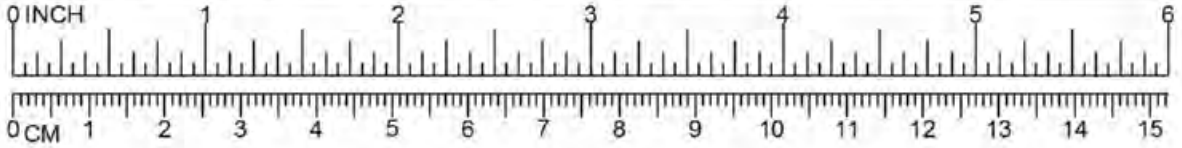

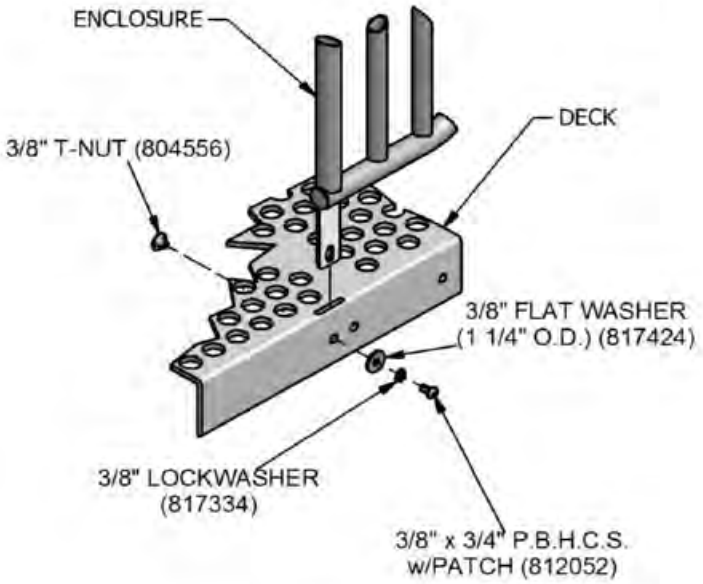

087

PowerScape®

GameTime®

A PLAYCORE Company

1-800-235-2440

ISSUED/REVISED: 7/3/12

90249 LEANING WALL CLIMBER

= INSTALLATION DETAIL

= PARTS LIST REFERENCE

90249
90250
90251
90252
90253
90254

90255
90256
90257
90258
90259
90260

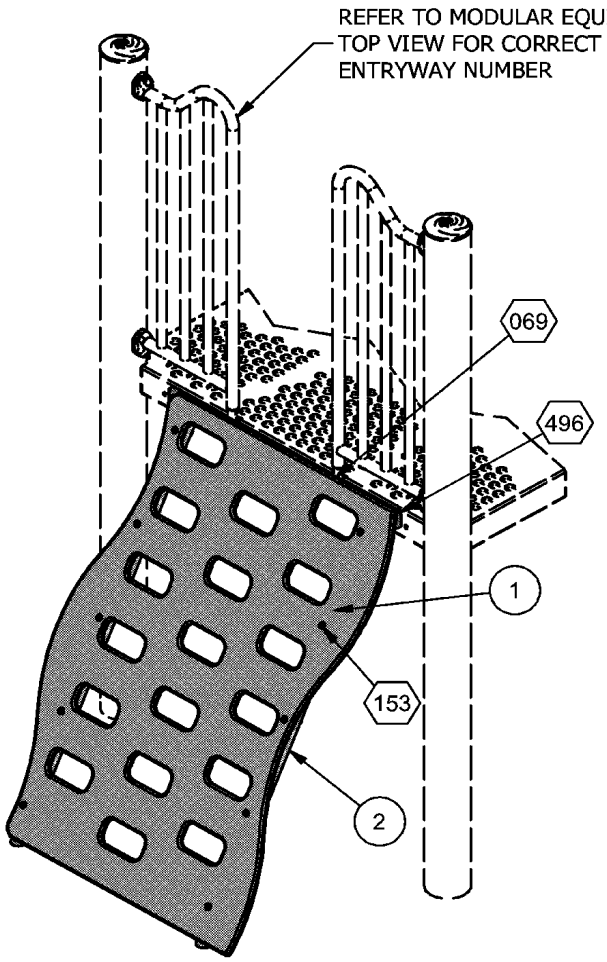

2'-0"	90249
2'-6"	90250
3'-0"	90251
4'-0"	90252
4'-6"	90253
5'-0"	90254
5'-6"	90255
6'-0"	90256
6'-6"	90257
7'-0"	90258
7'-6"	90259
8'-0"	90260

ASSEMBLY DRAWING
90252 SHOWN

INSTALLATION INSTRUCTIONS

1. Before assembling this equipment, read the enclosed INSTALLER INSTRUCTIONS in the installation booklet; follow all the instructions during installation.
2. Assemble parts as shown in the ASSEMBLY DRAWING. Refer to the assembly details for the specific hardware required in each connection.

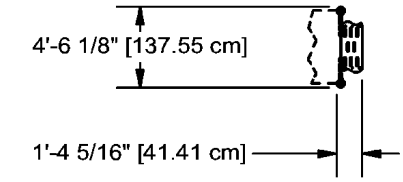

90249

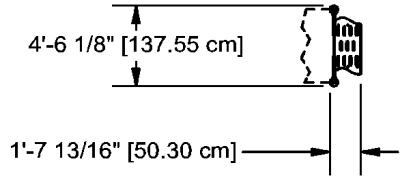

90250

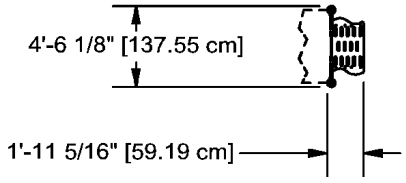

90251

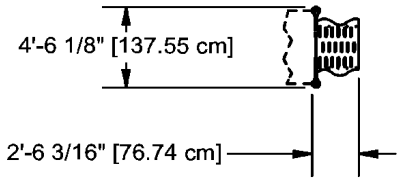

90252

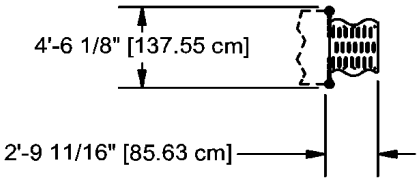

90253

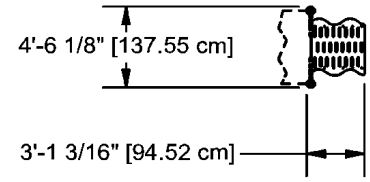

90254

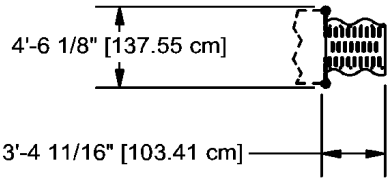

90255

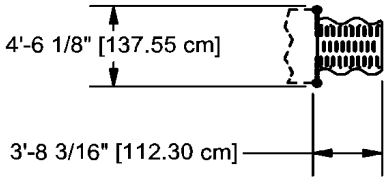

90256

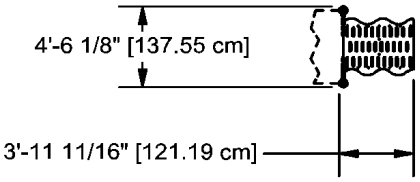

90257

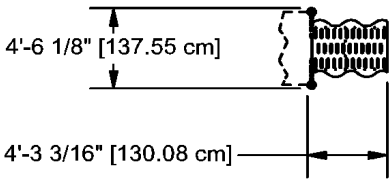

90258

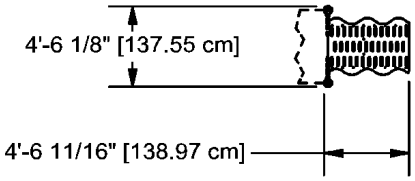

90259

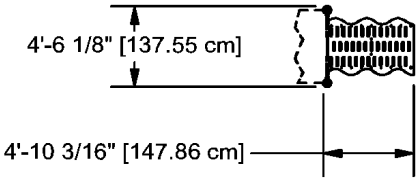

90260

TOP VIEWS

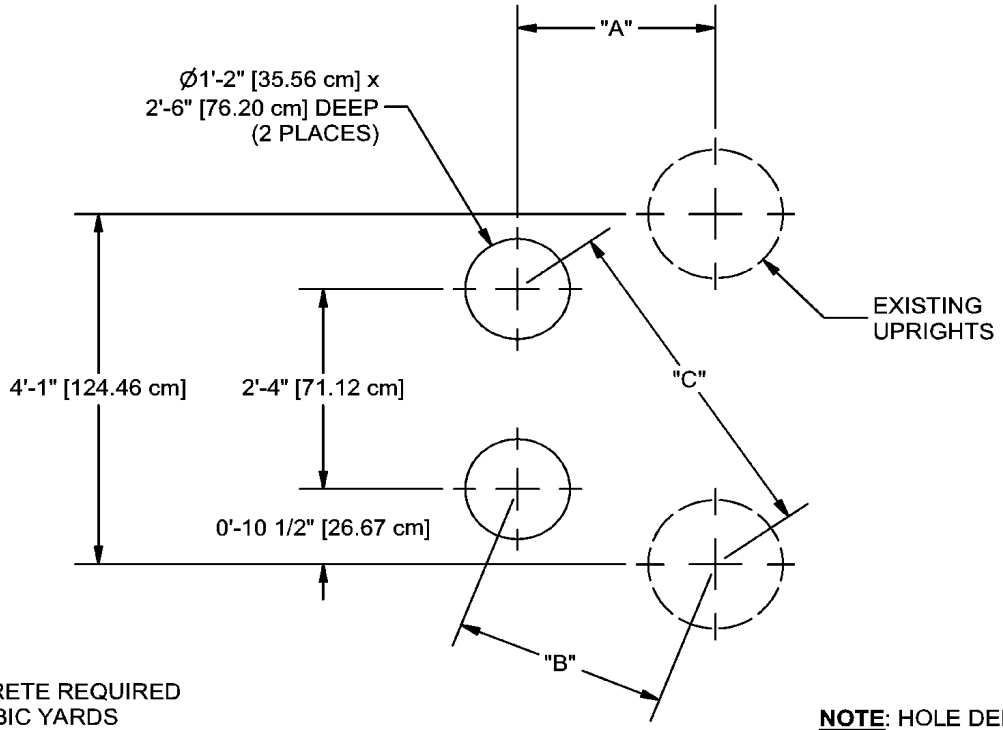

CONCRETE REQUIRED
.12 CUBIC YARDS
[.10 CUBIC METERS]

NOTE: HOLE DEPTHS INDICATED ON ALL GROUND PLANS ARE MEASURED FROM THE FINISHED SURFACE. SEE DETAIL 005. ALL FOOTING DIMENSIONS ARE BASED ON LEVEL FINISHED SURFACE.

FINAL	"A" DIMENSION	"B" DIMENSION	"C" DIMENSION
90249	1'-5/8" [32.05 cm]	1'-4 7/16" [41.69 cm]	3'-4 1/2" [102.91 cm]
90250	1'-4 1/16" [40.86 cm]	1'-7 3/16" [48.79 cm]	3'-5 3/4" [105.98 cm]
90251	1'-7 9/16" [49.67 cm]	1'-10 3/16" [56.38 cm]	3'-7 3/16" [109.68 cm]
90252	2'-2 1/2"[67.27 cm]	2'-4 1/2" [72.38 cm]	3'-10 3/4" [118.69 cm]
90253	2'-5 11/16" [75.33 cm]	2'-7 7/16" [79.91 cm]	4'- 5/8" [123.44 cm]
90254	2'-9 1/8" [84.13 cm]	2'-10 3/4" [88.25 cm]	4'-2 13/16" [129.00 cm]
90255	3'-7/8" [93.66 cm]	3'-2 5/16" [97.39 cm]	4'-5 5/16" [135.41 cm]
90256	3'-4 5/16" [102.46 cm]	3'-5 11/16" [105.88 cm]	4'-7 3/4" [141.64 cm]
90257	3'-7 13/16" [111.28 cm]	3'-9 1/16" [114.46 cm]	4'-10 5/16" [148.11 cm]
90258	3'-11 1/4" [120.02 cm]	4'-7/16" [123.03 cm]	5'-1" [154.94 cm]
90259	4'-2 3/4" [128.91 cm]	4'-3 13/16" [131.60 cm]	5'-3 11/16" [161.77 cm]
90260	4'-7" [139.70 cm]	4'-7 1/4" [140.34 cm]	5'-6 1/2" [168.91 cm]

GROUND PLANS

Parts List								
REF.	DESCRIPTION	90249	90250	90251	90252	90253	90254	PART NUM
1	LEANING WALL PANEL	1	0	0	0	0	0	163010
1	LEANING WALL PANEL	0	1	0	0	0	0	163011
1	LEANING WALL PANEL	0	0	1	0	0	0	163012
1	LEANING WALL PANEL	0	0	0	1	0	0	177907
1	LEANING WALL PANEL	0	0	0	0	1	0	177909
1	LEANING WALL PANEL	0	0	0	0	0	1	177911
2	FRAME ASS'Y for LEANING WALL	1	0	0	0	0	0	162265
2	FRAME ASS'Y for LEANING WALL	0	1	0	0	0	0	162264
2	FRAME ASS'Y for LEANING WALL	0	0	1	0	0	0	161802
2	FRAME ASS'Y for LEANING WALL	0	0	0	1	0	0	177898
2	FRAME ASS'Y for LEANING WALL	0	0	0	0	1	0	177900
2	FRAME ASS'Y for LEANING WALL	0	0	0	0	0	1	177902
	HARDWARE COMPLETE	1	1	0	0	0	0	203680
	HARDWARE COMPLETE	0	0	1	0	0	0	203681
	HARDWARE COMPLETE	0	0	0	1	1	0	203682
	HARDWARE COMPLETE	0	0	0	0	0	1	203683
	3/8" x 1/2" P.B.H.C.S. w/PATCH	2	2	2	2	2	2	812049*
	3/8" x 3/4" P.B.H.C.S. w/PATCH	2	2	2	2	2	2	812052*
	3/8" LOCKWASHER	4	4	4	4	4	4	817334*
	3/8" T-NUT	4	4	4	4	4	4	804556*
	5/16" x 2" P.B.H.C.S. w/Patch	6	6	8	10	10	12	812046*
	5/16" FLAT WASHER (5/8" O.D.)	6	6	8	10	10	12	817406*
	5/16" LOCK WASHER	6	6	8	10	10	12	817330*
	5/16" T-NUT (SHORT)	6	6	8	10	10	12	804558*

Unless Otherwise Specified, All Units of Measure are Each
** Included in Hardware*

Warning: During Installation, Hardware And Small Parts Are Choking Hazards For Young Children. Store Unused Parts Appropriately Until Assembly Is Completed. Once Assembly Is Completed, Remove Any Unused Parts From The Play Environment And Dispose/Save Them In A Secure Location.

Note: Peen Tee-Nuts and Flatwashers to match radius of pipe after assembly is complete.

Note: Loctite (supplied by others) should be used on any non-patch hardware.

Parts List								
REF.	DESCRIPTION	90255	90256	90257	90258	90259	90260	PART NUM
1	LEANING WALL PANEL	1	0	0	0	0	0	177913
1	LEANING WALL PANEL	0	1	0	0	0	0	177915
1	LEANING WALL PANEL	0	0	1	0	0	0	203594
1	LEANING WALL PANEL	0	0	0	1	0	0	203599
1	LEANING WALL PANEL	0	0	0	0	1	0	203604
1	LEANING WALL PANEL	0	0	0	0	0	1	203609
2	FRAME ASS'Y for LEANING WALL	1	0	0	0	0	0	177904
2	FRAME ASS'Y for LEANING WALL	0	1	0	0	0	0	177906
2	FRAME ASS'Y for LEANING WALL	0	0	1	0	0	0	203591
2	FRAME ASS'Y for LEANING WALL	0	0	0	1	0	0	203596
2	FRAME ASS'Y for LEANING WALL	0	0	0	0	1	0	203601
2	FRAME ASS'Y for LEANING WALL	0	0	0	0	0	1	203606
	HARDWARE COMPLETE	1	0	0	0	0	0	203683
	HARDWARE COMPLETE	0	1	1	0	0	0	203684
	HARDWARE COMPLETE	0	0	0	1	1	0	203685
	HARDWARE COMPLETE	0	0	0	0	0	1	203686
	3/8" x 1/2" P.B.H.C.S. w/PATCH	2	2	2	2	2	2	812049*
	3/8" x 3/4" P.B.H.C.S. w/PATCH	2	2	2	2	2	2	812052*
	3/8" LOCKWASHER	4	4	4	4	4	4	817334*
	3/8" T-NUT	4	4	4	4	4	4	804556*
	5/16" x 2" P.B.H.C.S. w/Patch	12	16	16	18	18	20	812046*
	5/16" FLAT WASHER (5/8" O.D.)	12	16	16	18	18	20	817406*
	5/16" LOCK WASHER	12	16	16	18	18	20	817330*
	5/16" T-NUT (SHORT)	12	16	16	18	18	20	804558*

Unless Otherwise Specified, All Units of Measure are Each
** Included in Hardware*

Warning: During Installation, Hardware And Small Parts Are Choking Hazards For Young Children. Store Unused Parts Appropriately Until Assembly Is Completed. Once Assembly Is Completed, Remove Any Unused Parts From The Play Environment And Dispose/Save Them In A Secure Location.

Note: Peen Tee-Nuts and Flatwashers to match radius of pipe after assembly is complete.

Note: Loctite (supplied by others) should be used on any non-patch hardware.

DETAILS -for-
90249-90260

IMPORTANT

TO REDUCE THE RISK OF CLOTHING ENTANGLEMENT IN COMPLIANCE WITH ASTM F1487, ANY BOLT END PROTRUDING MORE THAN TWO FULL THREADS BEYOND THE FACE OF THE NUT SHALL BE CUT-OFF FLUSH, FILED SMOOTH AND TREATED TO PREVENT CORROSION.

NOTE: LOCTITE (SUPPLIED BY OTHERS) SHOULD BE USED ON ALL THREADED HARDWARE.

NOTE: AFTER ASSEMBLY IS COMPLETE, PEEN TEE-NUTS AND FLATWASHERS TO MATCH RADIUS OF PIPE.

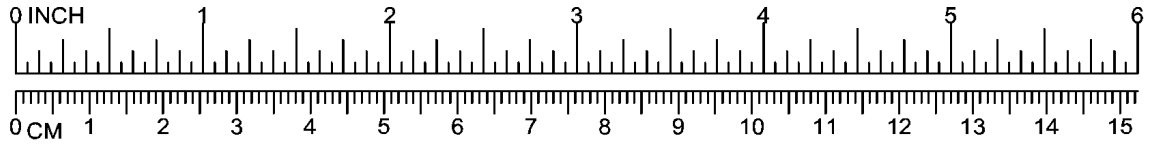

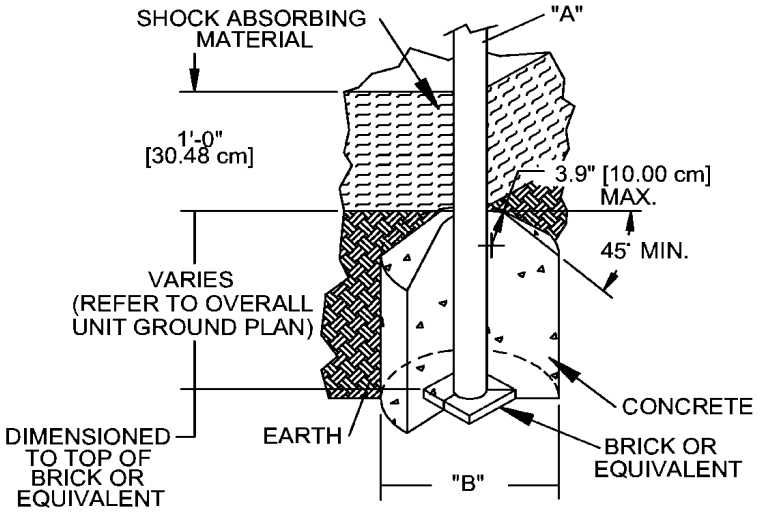

DIA. "A" (PIPE SIZE)	DIA. "B" (FOOTING SIZE)
1 1/16" [2.70 cm]	1'-2" [35.56 cm]
1 5/16" [3.33 cm]	1'-2" [35.56 cm]
1 5/8" [4.13 cm]	1'-2" [35.56 cm]
1 7/8" [4.83 cm]	1'-2" [35.56 cm]
2 3/8" [6.03 cm]	1'-2" [35.56 cm]
3 1/2" [8.89 cm]	1'-6" [45.72 cm]
5" [12.70 cm]	1'-6" [45.72cm]
TRACK RIDE & SWINGS	
5" [12.70 cm]	2'-0" [60.96 cm]
TREE SCAPE	
5" [12.70 cm]	4'-0" [121.92 cm]

NOTES:
-SLOPED FOOTING IS A REQUIREMENT OF EUROPEAN STANDARD EN1176-1 ONLY
-SUGGESTED MINIMUM CONCRETE RATING: 3000 PSI

032

SHOCK ABSORBING PROPERTIES OF SURFACING MATERIALS VARY. IF YOU DETERMINE THAT LESS THAN 1'-0" [30.48cm] OF SURFACING IS REQUIRED, MAKE UP THE DIFFERENCE IN ELEVATION WITH EARTH, BEFORE APPLYING SURFACING.

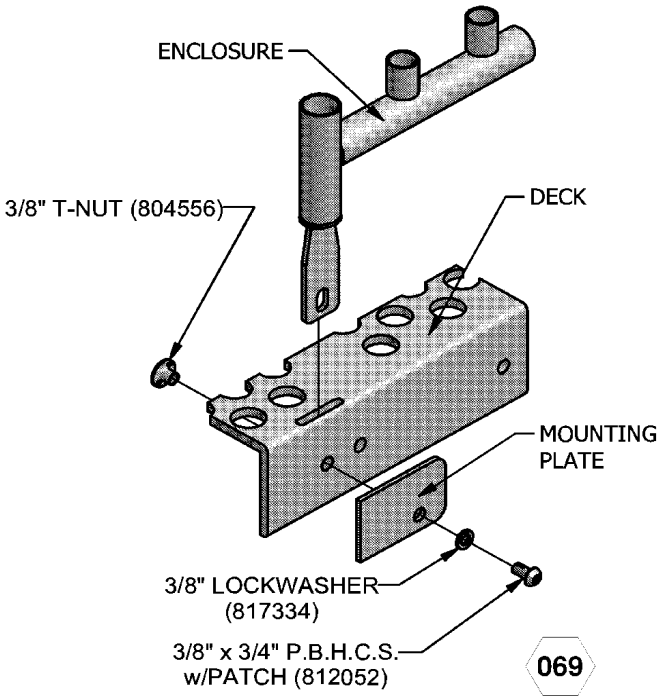

069

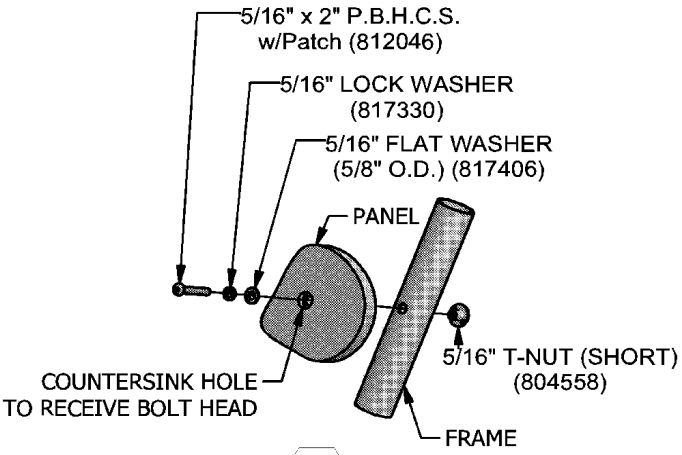

153

DETAILS -for-
90249-90260

*I*MPORTANT

TO REDUCE THE RISK OF CLOTHING ENTANGLEMENT IN COMPLIANCE WITH ASTM F1487, ANY BOLT END PROTRUDING MORE THAN TWO FULL THREADS BEYOND THE FACE OF THE NUT SHALL BE CUT-OFF FLUSH, FILED SMOOTH AND TREATED TO PREVENT CORROSION.

NOTE: LOCTITE (SUPPLIED BY OTHERS) SHOULD BE USED ON ALL THREADED HARDWARE.

NOTE: AFTER ASSEMBLY IS COMPLETE, PEEN TEE-NUTS AND FLATWASHERS TO MATCH RADIUS OF PIPE.

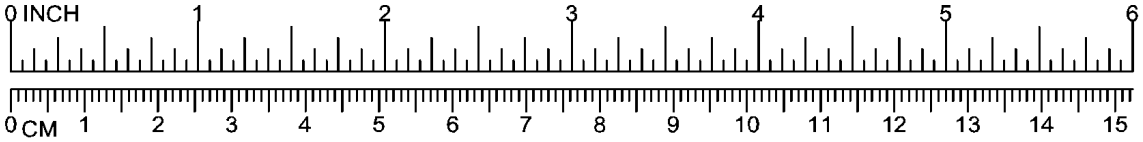

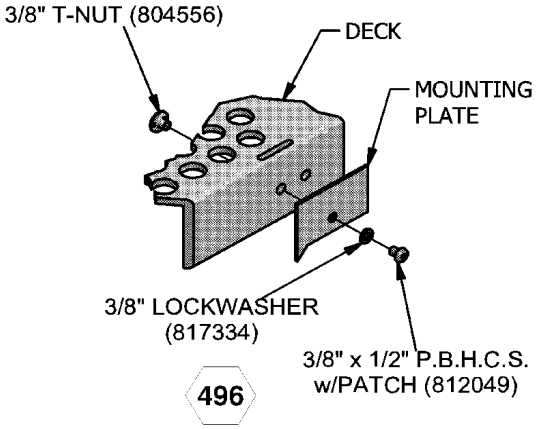

PowerScape®

GameTime®

A PLAYCORE Company

1-800-235-2440

ISSUED/REVISED: 06/28/12

90354 STORE PANEL

= INSTALLATION DETAIL

= PARTS LIST REFERENCE

ONE COLOR	90354
TWO COLOR	90392

This play equipment is designed for CHILDREN 2 TO 5 YEARS OLD Adult supervision is recommended

4'-0" TO 5'-0" DECK HEIGHTS

This play equipment is designed for CHILDREN 5 TO 12 YEARS OLD Adult supervision is recommended

4'-0" TO 8'-0" DECK HEIGHTS

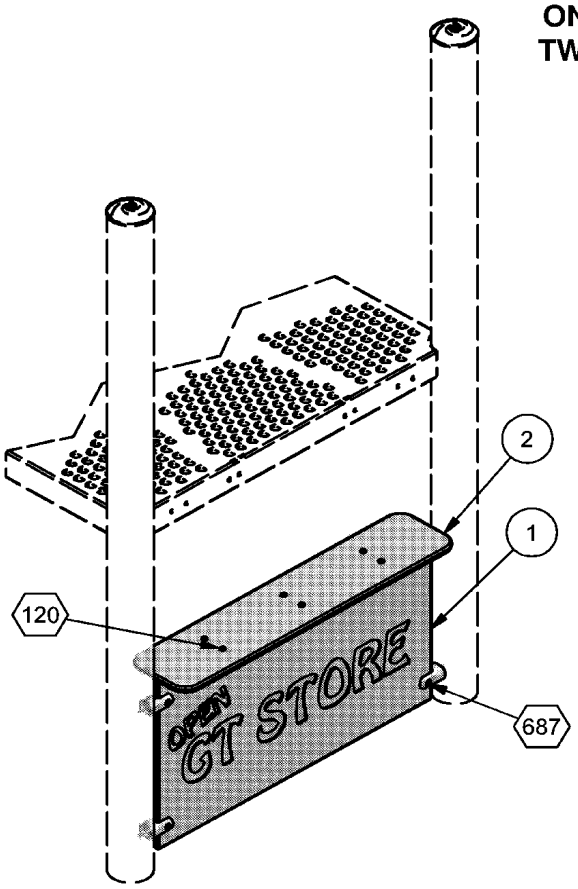

ASSEMBLY DRAWING

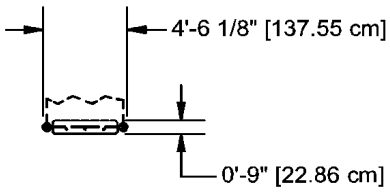

TOP VIEW

INSTALLATION INSTRUCTIONS

1. Before assembling this equipment, read the enclosed INSTALLER INSTRUCTIONS in the installation booklet; follow all the instructions during installation.
2. Assemble parts as shown in the ASSEMBLY DRAWING. Refer to the assembly details for the specific hardware required in each connection.

Parts List				
REF.	DESCRIPTION	90354	90392	PART NUMBER
1	STORE ENCLOSURE (ONE COLOR)	1	0	203905
1	STORE ENCLOSURE (TWO COLOR)	0	1	204162
2	SEAT	1	1	203906
	TRU-LOC PANEL ATTACHMENT	4	0	G03861
	TRU-LOC PANEL ATTACHMENT	0	4	K03861
	L-BRACKET	6	6	200205
	HARDWARE COMPLETE	1	1	203907
	3/8" x 1" P.B.H.C.S. w/PATCH	4	4	812050*
	3/8" x 1 1/4" P.B.H.C.S. w/PATCH	6	6	812051*
	3/8" x 1 1/2" P.B.H.C.S. w/ PATCH	3	3	812053*
	3/8" x 1 3/4" HEX HEAD BOLT	4	4	801006*
	3/8" LOCKWASHER	17	17	817334*
	3/8" HEX NUT	9	9	804053*
	3/8" T-NUT	4	4	804556*

Unless Otherwise Specified, All Units of Measure are Each
** Included in Hardware*

Warning: During Installation, Hardware And Small Parts Are Choking Hazards For Young Children. Store Unused Parts Appropriately Until Assembly Is Completed. Once Assembly Is Completed, Remove Any Unused Parts From The Play Environment And Dispose/Save Them In A Secure Location.

Note: Peen Tee-Nuts and Flatwashers to match radius of pipe after assembly is complete.

Note: Loctite (supplied by others) should be used on any non-patch hardware.

DETAILS -for-
90354 & 90392

*I*MPORTANT

TO REDUCE THE RISK OF CLOTHING ENTANGLEMENT IN COMPLIANCE WITH ASTM F1487, ANY BOLT END PROTRUDING MORE THAN TWO FULL THREADS BEYOND THE FACE OF THE NUT SHALL BE CUT-OFF FLUSH, FILED SMOOTH AND TREATED TO PREVENT CORROSION.

NOTE: LOCTITE (SUPPLIED BY OTHERS) SHOULD BE USED ON ALL THREADED HARDWARE.

NOTE: AFTER ASSEMBLY IS COMPLETE, PEEN TEE-NUTS AND FLATWASHERS TO MATCH RADIUS OF PIPE.

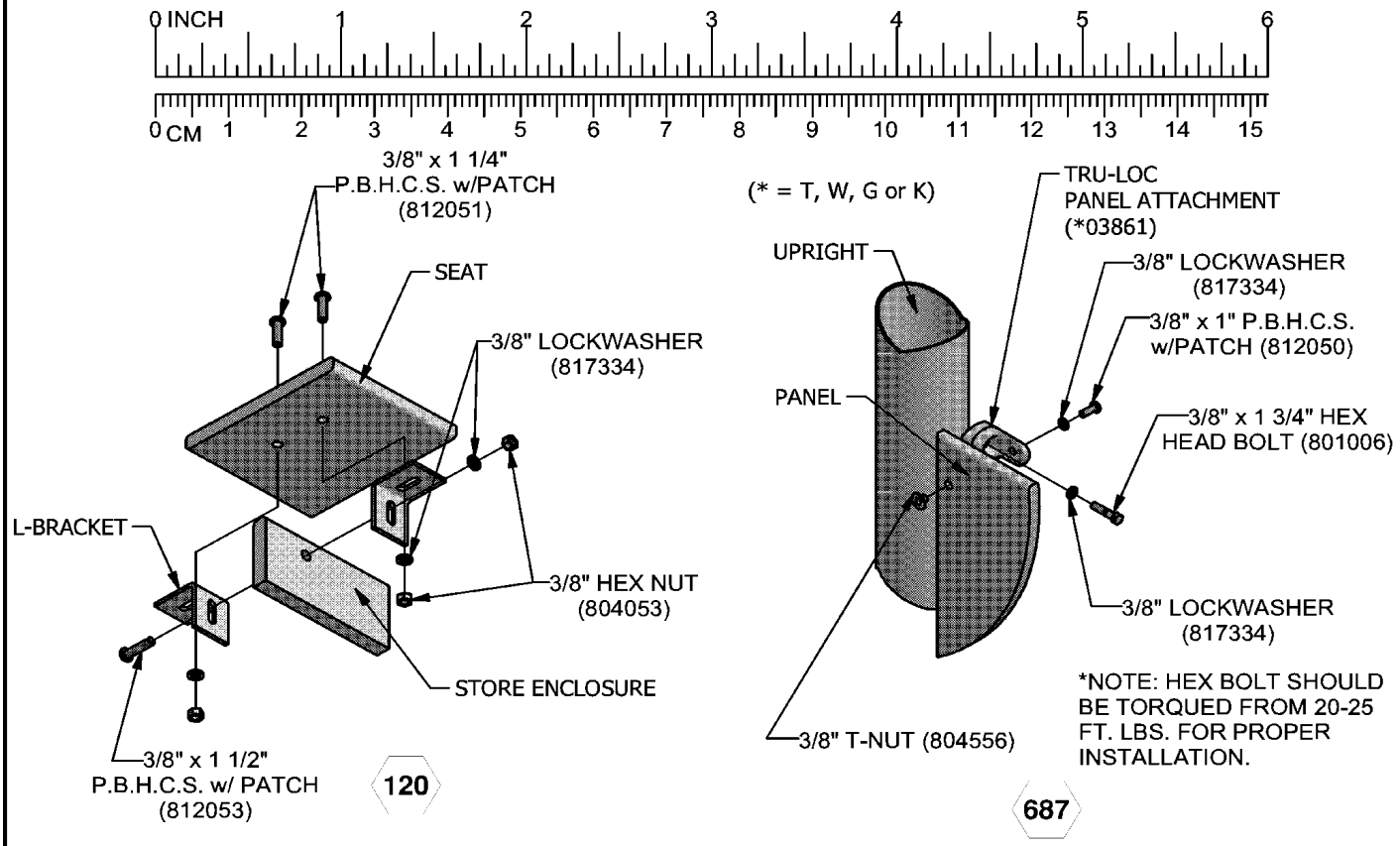

PowerScape

GameTime

A PLAYCORE Company

1-800-235-2440

ISSUED/REVISED: 12/22/15

90369 RIVER ROCK CLIMBER

⬡ = INSTALLATION DETAIL

◯ = PARTS LIST REFERENCE

3'-6" - 5'-0" DECK HEIGHTS

5'-6" & 6'-0" DECK HEIGHTS

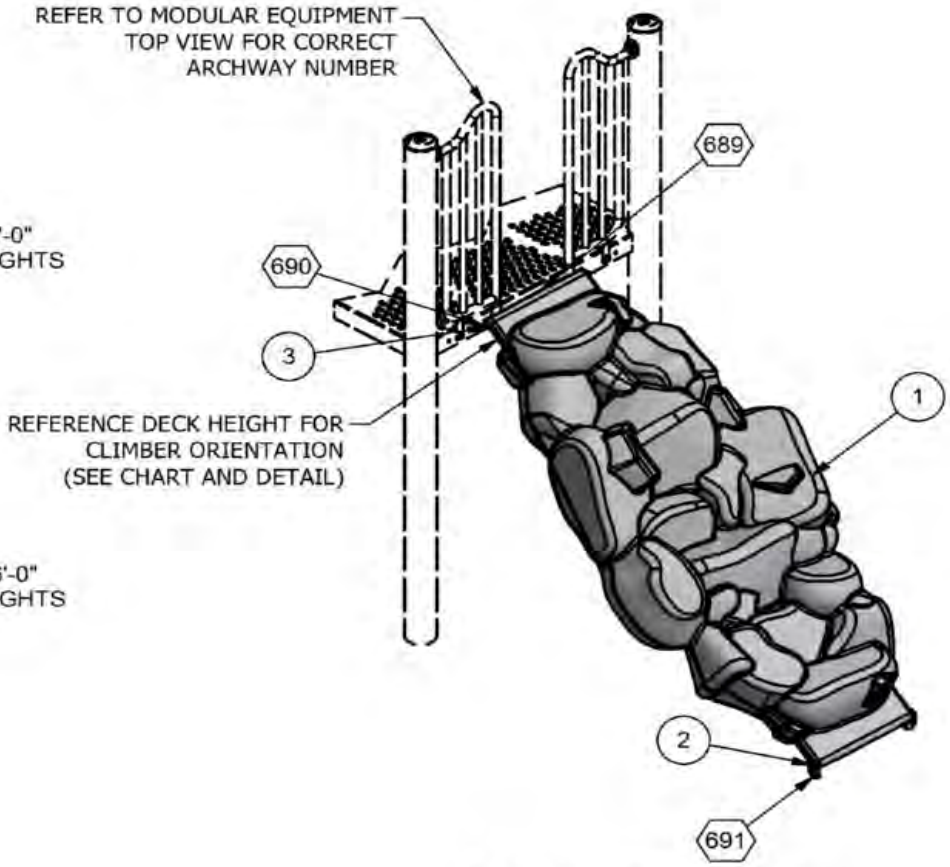

ASSEMBLY DRAWING

INSTALLATION INSTRUCTIONS

1. Before assembling this equipment, read the enclosed INSTALLER INSTRUCTIONS in the installation booklet; follow all the instructions during installation.
2. Assemble parts as shown in the ASSEMBLY DRAWING. Refer to the assembly details for the specific hardware required in each connection.

DECK HEIGHT CHART	
DECK HEIGHT	CLIMBER ORIENTATION
3'-6"	BOTTOM B
4'-0"	BOTTOM B
4'-6"	BOTTOM B
5'-0"	BOTTOM A
5'-6"	BOTTOM A
6'-0"	BOTTOM A

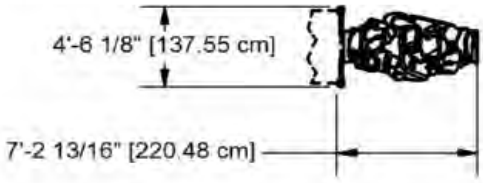

3'-6" DECK

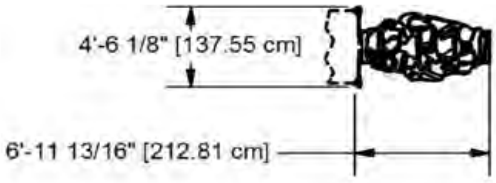

4' DECK

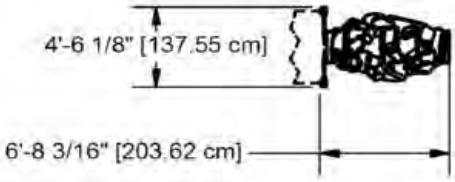

4'-6" DECK

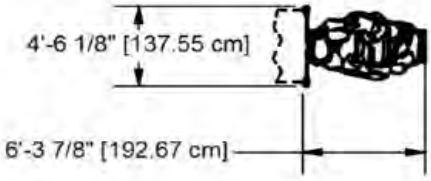

5' DECK

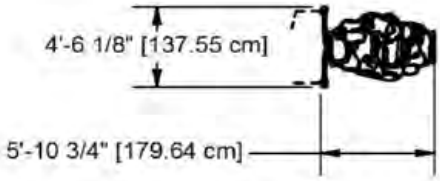

5'-6" DECK

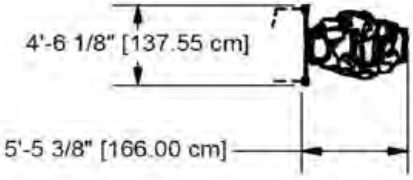

6' DECK

TOP VIEWS

DECK HEIGHTS	DIMENSION 'A'	DIMENSION 'B'
3'-6"	6'-11 1/4" [211.39cm]	7'-0 1/4" [214.06cm]
4'-0"	6'-8 3/16" [203.73cm]	6'-9 11/16" [207.50cm]
4'-6"	6'-4 5/8" [194.56cm]	6'-5 3/4" [197.51cm]
5'-0"	6'-0 3/8" [183.87cm]	6'-1 13/16" [187.48cm]
5'-6"	5'-7 3/16" [170.63cm]	5'-8 1/2" [173.93cm]
6'-0"	5'-1" [155.00cm]	5'-2 3/4" [159.32cm]

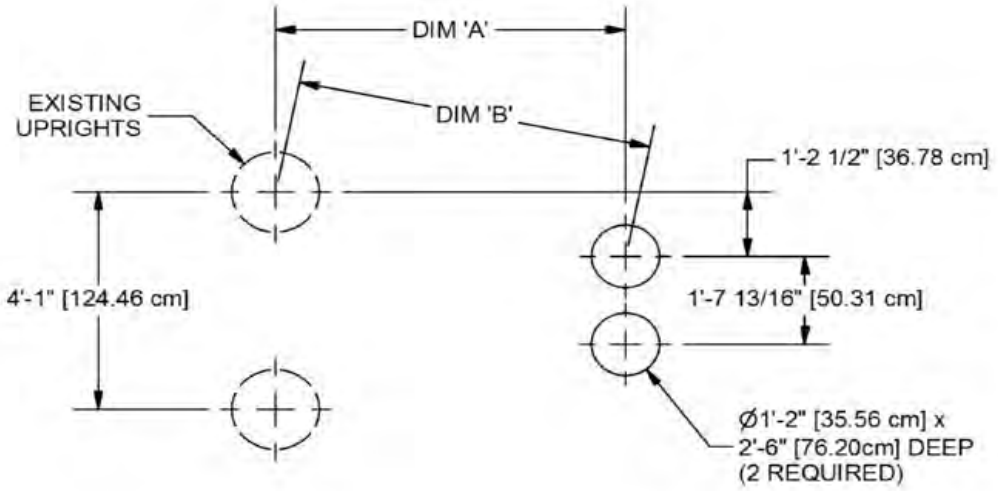

CONCRETE REQUIRED
.12 CUBIC YARDS
[.10 CUBIC METERS]

NOTE: HOLE DEPTHS INDICATED ON ALL GROUND PLANS ARE MEASURED FROM THE FINISHED SURFACE. SEE DETAIL 032. ALL FOOTING DIMENSIONS ARE BASED ON LEVEL FINISHED SURFACE.

GROUND PLAN

Parts List			
REF.	DESCRIPTION	QTY	PART NUMBER
1	RIVER ROCK CLIMBER	1	203627
2	SMASHED FOOTBUCK	2	160410
3	MOUNTING BRACKET WELD ASS'Y	1	203010
	HARDWARE COMPLETE	1	204073
	3/8" x 1" P.B.H.C.S. w/PATCH	2	812050*
	3/8" x 1 1/4" P.B.H.C.S. w/PATCH	4	812051*
	3/8" LOCKWASHER	6	817334*
	3/8" FLAT WASHER	2	817410*
	3/8" T-NUT	2	804556*
	3/8" FLAT WASHER (1 1/4" O.D.)	2	817424*

Unless Otherwise Specified, All Units of Measure are Each
** Included in Hardware*

Warning: During Installation, Hardware And Small Parts Are Choking Hazards For Young Children. Store Unused Parts Appropriately Until Assembly Is Completed. Once Assembly Is Completed, Remove Any Unused Parts From The Play Environment And Dispose/Save Them In A Secure Location.
Note: Peen Tee-Nuts and Flatwashers to match radius of pipe after assembly is complete.
Note: Loctite (supplied by others) should be used on any non-patch hardware.

DETAILS -for-
90369

IMPORTANT

TO REDUCE THE RISK OF CLOTHING ENTANGLEMENT IN COMPLIANCE WITH ASTM F1487, ANY BOLT END PROTRUDING MORE THAN TWO FULL THREADS BEYOND THE FACE OF THE NUT SHALL BE CUT-OFF FLUSH, FILED SMOOTH AND TREATED TO PREVENT CORROSION.

NOTE: LOCTITE (SUPPLIED BY OTHERS) SHOULD BE USED ON ALL THREADED HARDWARE.

NOTE: AFTER ASSEMBLY IS COMPLETE, PEEN TEE-NUTS AND FLATWASHERS TO MATCH RADIUS OF PIPE.

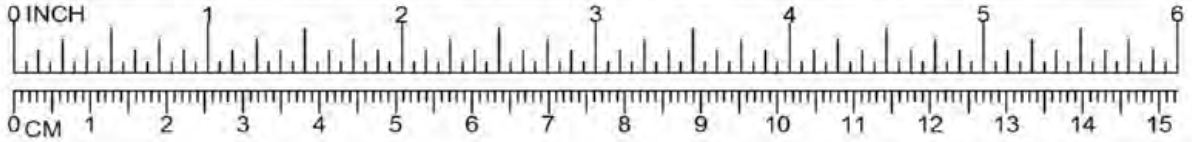

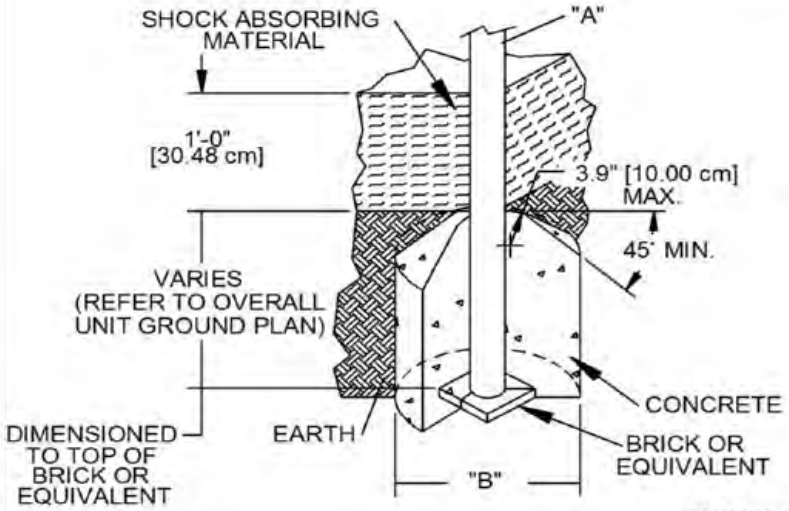

DIA. "A" (PIPE SIZE)	DIA. "B" (FOOTING SIZE)
1 1/16" [2.70 cm]	1'-2" [35.56 cm]
1 5/16" [3.33 cm]	1'-2" [35.56 cm]
1 5/8" [4.13 cm]	1'-2" [35.56 cm]
1 7/8" [4.83 cm]	1'-2" [35.56 cm]
2 3/8" [6.03 cm]	1'-2" [35.56 cm]
3 1/2" [8.89 cm]	1'-6" [45.72 cm]
5" [12.70 cm]	1'-6" [45.72cm]
TRACK RIDE & SWINGS	
5" [12.70 cm]	2'-0" [60.96 cm]
TREE SCAPE	
5" [12.70 cm]	4'-0" [121.92 cm]

NOTES:
-SLOPED FOOTING IS A REQUIREMENT OF EUROPEAN STANDARD EN1176-1 ONLY
-SUGGESTED MINIMUM CONCRETE RATING: 3000 PSI

032

SHOCK ABSORBING PROPERTIES OF SURFACING MATERIALS VARY. IF YOU DETERMINE THAT LESS THAN 1'-0" [30.48cm] OF SURFACING IS REQUIRED, MAKE UP THE DIFFERENCE IN ELEVATION WITH EARTH, BEFORE APPLYING SURFACING.

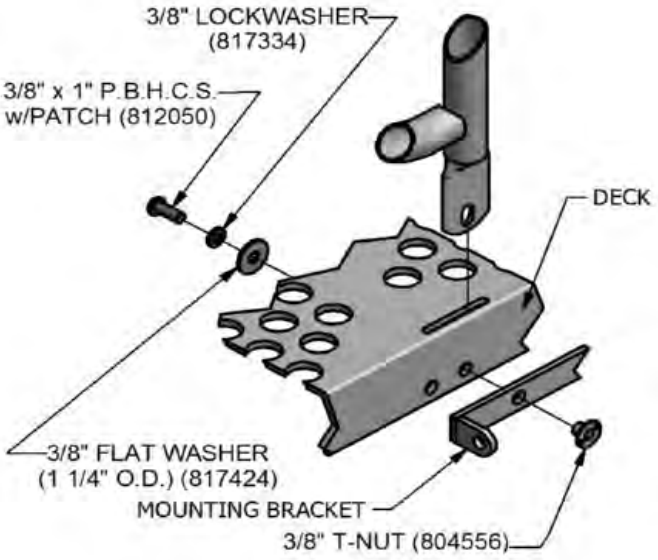

689

DETAILS -for-
90369

IMPORTANT

TO REDUCE THE RISK OF CLOTHING ENTANGLEMENT IN COMPLIANCE WITH ASTM F1487, ANY BOLT END PROTRUDING MORE THAN TWO FULL THREADS BEYOND THE FACE OF THE NUT SHALL BE CUT-OFF FLUSH, FILED SMOOTH AND TREATED TO PREVENT CORROSION.

NOTE: LOCTITE (SUPPLIED BY OTHERS) SHOULD BE USED ON ALL THREADED HARDWARE.

NOTE: AFTER ASSEMBLY IS COMPLETE, PEEN TEE-NUTS AND FLATWASHERS TO MATCH RADIUS OF PIPE.

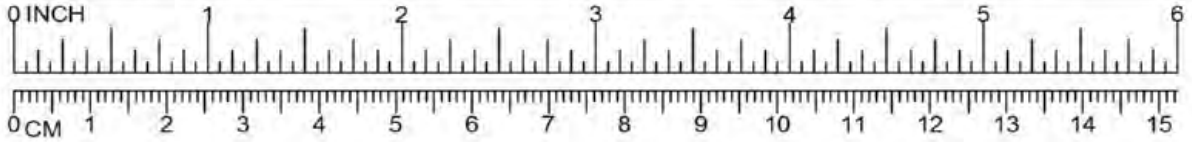

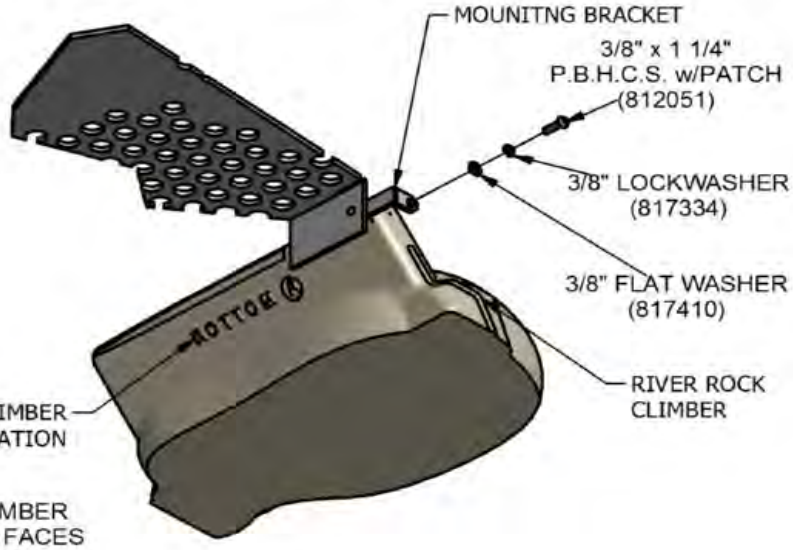

NOTE:
IN ALL DECK HEIGTHS CLIMBER ORIENTATION INDICATOR FACES GROUND. REFERENCE DECK HEIGTH CHART

690

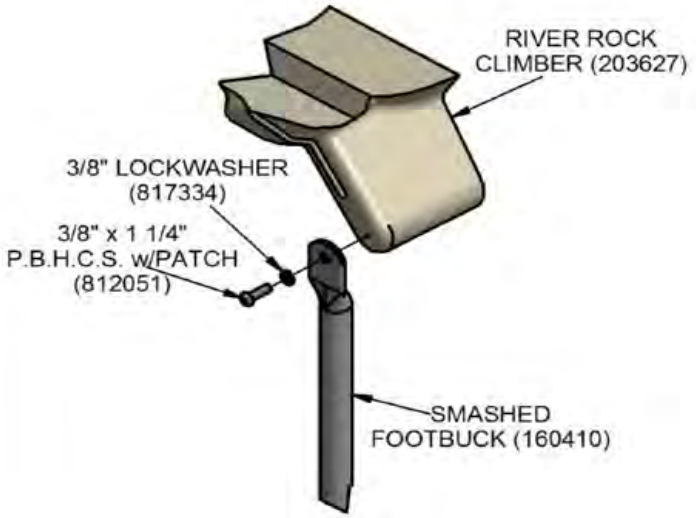

691

PowerScape®

GameTime®

A PLAYCORE Company

1-800-235-2440

ISSUED/REVISED: 11/12/12

90388 OVERHEAD CLIMBER ACCESS LADDER

= INSTALLATION DETAIL

= PARTS LIST REFERENCE

1'-6" ATTACHMENT	90388
2'-0" ATTACHMENT	90389
2'-6" ATTACHMENT	90390
3'-0" ATTACHMENT	90391

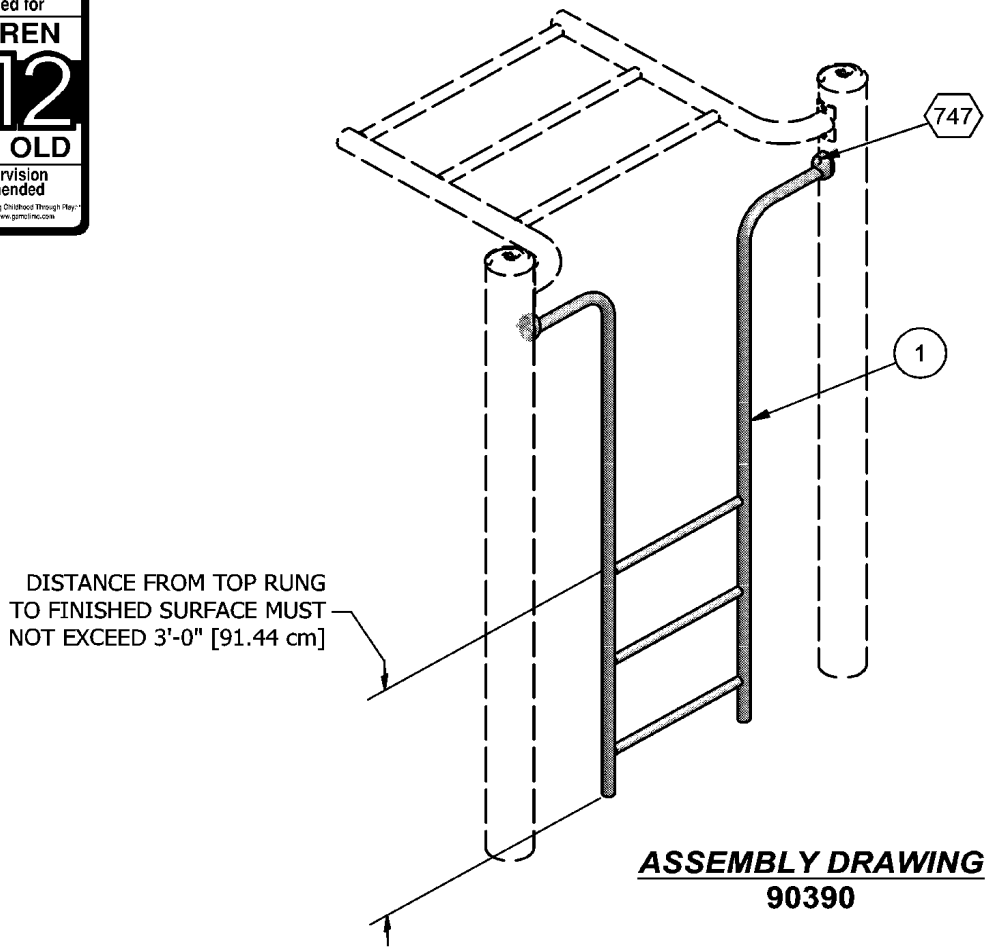

ASSEMBLY DRAWING
90390

INSTALLATION INSTRUCTIONS

1. Before assembling this equipment, read the enclosed INSTALLER INSTRUCTIONS in the installation booklet; follow all the instructions during installation.
2. Assemble parts as shown in the ASSEMBLY DRAWING. Refer to the assembly details for the specific hardware required in each connection.

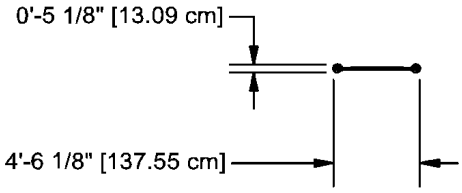

TOP VIEW

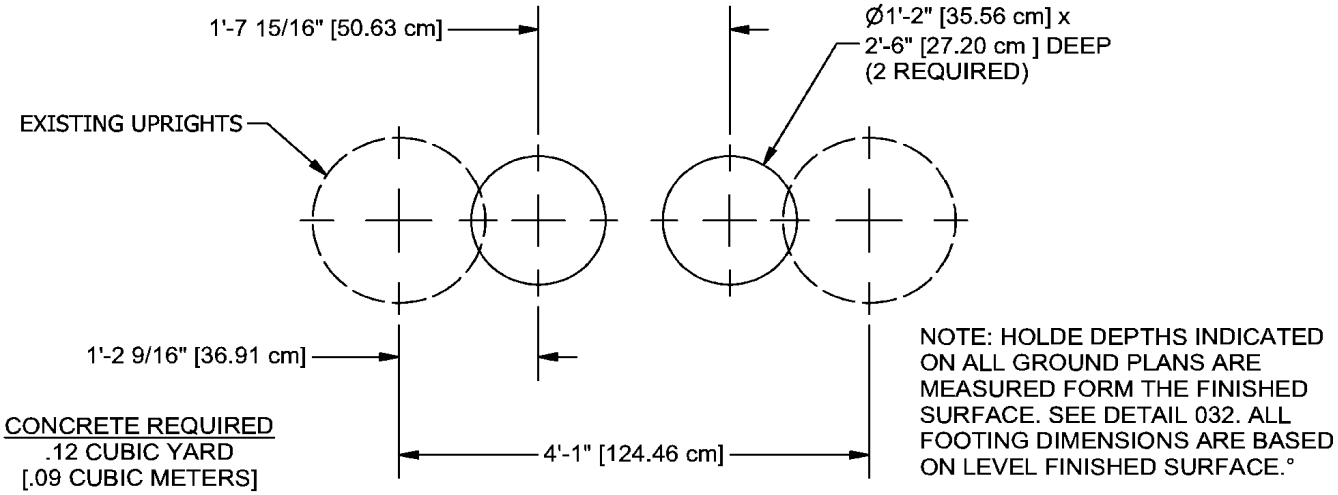

GROUND PLAN

Parts List						
REF.	DESCRIPTION	90388	90389	90390	90391	PART NUMBER
1	OVERHEAD CLIMBER ACCESS LADDER	1	0	0	0	204102
1	OVERHEAD CLIMBER ACCESS LADDER	0	1	0	0	204105
1	OVERHEAD CLIMBER ACCESS LADDER	0	0	1	0	204108
1	OVERHEAD CLIMBER ACCESS LADDER	0	0	0	1	204111
	TRU-LOC	2	2	2	2	A03650
	HARDWARE COMPLETE	1	1	1	1	204114
	3/8" x 2" P.B.H.C.S. w/PATCH	2	2	2	2	812055*
	3/8" LOCKWASHER	2	2	2	2	817334*
	ALUM. PIN	2	2	2	2	203568*

Unless Otherwise Specified, All Units of Measure are Each
** Included in Hardware*

Warning: During Installation, Hardware And Small Parts Are Choking Hazards For Young Children. Store Unused Parts Appropriately Until Assembly Is Completed. Once Assembly Is Completed, Remove Any Unused Parts From The Play Environment And Dispose/Save Them In A Secure Location.

Note: Peen Tee-Nuts and Flatwashers to match radius of pipe after assembly is complete.
Note: Loctite (supplied by others) should be used on any non-patch hardware.

DETAILS -for-
90388, 90389, 90390 & 90391

IMPORTANT

TO REDUCE THE RISK OF CLOTHING ENTANGLEMENT IN COMPLIANCE WITH ASTM F1487, ANY BOLT END PROTRUDING MORE THAN TWO FULL THREADS BEYOND THE FACE OF THE NUT SHALL BE CUT-OFF FLUSH, FILED SMOOTH AND TREATED TO PREVENT CORROSION.

NOTE: LOCTITE (SUPPLIED BY OTHERS) SHOULD BE USED ON ALL THREADED HARDWARE.

NOTE: AFTER ASSEMBLY IS COMPLETE, PEEN TEE-NUTS AND FLATWASHERS TO MATCH RADIUS OF PIPE.

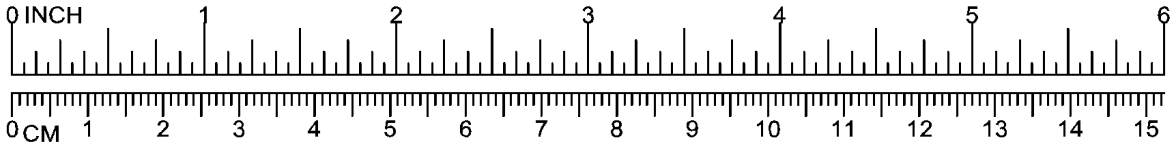

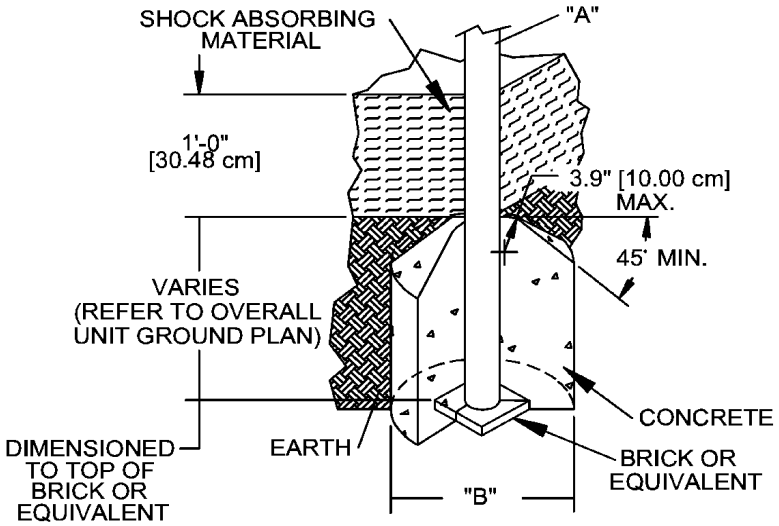

DIA. "A" (PIPE SIZE)	DIA. "B" (FOOTING SIZE)
1 1/16" [2.70 cm]	1'-2" [35.56 cm]
1 5/16" [3.33 cm]	1'-2" [35.56 cm]
1 5/8" [4.13 cm]	1'-2" [35.56 cm]
1 7/8" [4.83 cm]	1'-2" [35.56 cm]
2 3/8" [6.03 cm]	1'-2" [35.56 cm]
3 1/2" [8.89 cm]	1'-6" [45.72 cm]
5" [12.70 cm]	1'-6" [45.72cm]
TRACK RIDE & SWINGS	
5" [12.70 cm]	2'-0" [60.96 cm]
TREE SCAPE	
5" [12.70 cm]	4'-0" [121.92 cm]

NOTES:
-SLOPED FOOTING IS A REQUIREMENT OF EUROPEAN STANDARD EN1176-1 ONLY
-SUGGESTED MINIMUM CONCRETE RATING: 3000 PSI

032

SHOCK ABSORBING PROPERTIES OF SURFACING MATERIALS VARY. IF YOU DETERMINE THAT LESS THAN 1'-0" [30.48cm] OF SURFACING IS REQUIRED, MAKE UP THE DIFFERENCE IN ELEVATION WITH EARTH, BEFORE APPLYING SURFACING.

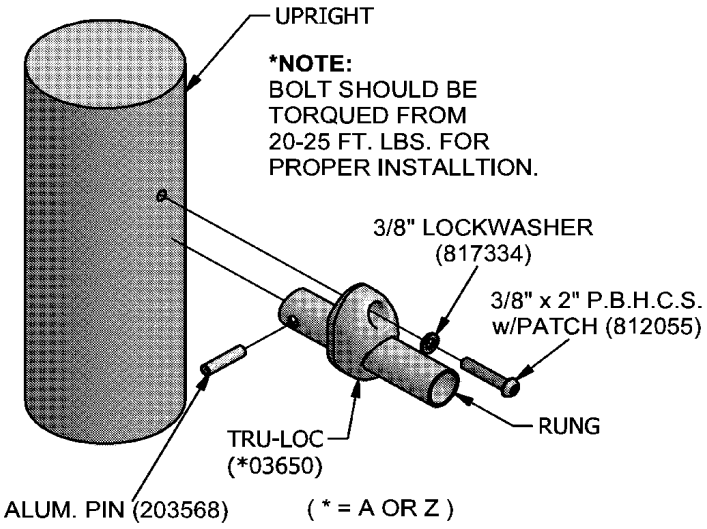

747

PowerScape®

GameTime®

A PLAYCORE Company

1-800-235-2440

ISSUED/REVISED: 05/18/12

90507

DOUBLE ZIP SLIDE

⬡ = INSTALLATION DETAIL

○ = PARTS LIST REFERENCE

2'-6"/3'-0" RUMBLE & ROLL ZIP SLIDE 90507
4'-0" DOUBLE ZIP SLIDE 90508
5'-0" DOUBLE ZIP SLIDE 90509
6'-0" DUELING WAVE ZIP SLIDE 90510

90507
90508
90509

90510

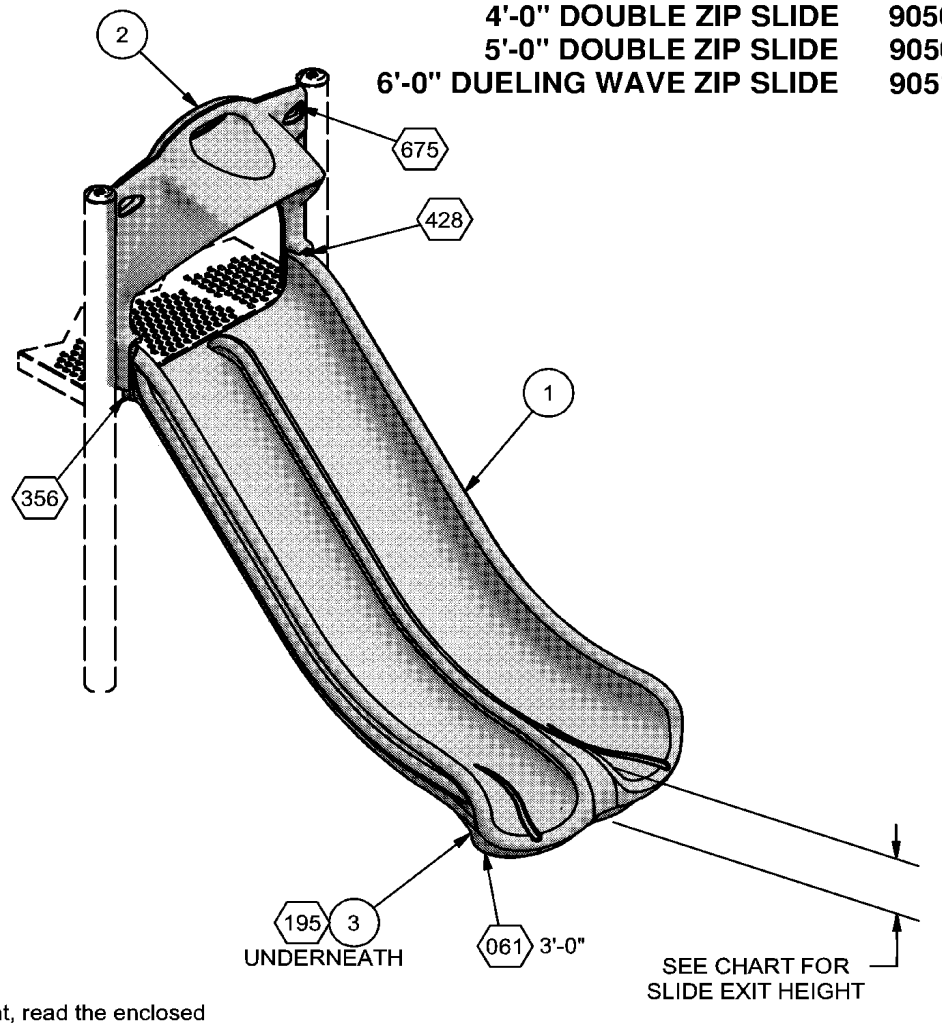

INSTALLATION INSTRUCTIONS

1. Before assembling this equipment, read the enclosed INSTALLATION INSTRUCTIONS in the installation booklet; follow all the instructions during installation.
2. Assemble parts as shown in the ASSEMBLY DRAWING. Refer to the assembly details for the specific hardware required in each connection.
3. If the white plug underneath slide is not drilled, drill a 3/16" diameter hole in center after installation.

PART NO.	SLIDE EXIT HEIGHT
90507 (2'-6")	0'-4 3/4" [12 cm]
90507 (3'-0")	0'-10 3/4" [27 cm]
90508 (4'-0")	0'-7" [18 cm]
90509 (5'-0")	0'-8 3/4" [22 cm]
90510 (6'-0")	0'-11" [28 cm]

EXIT HEIGHT CHART -for- 3'-0" TO 4'-0"	
STANDARD	EXIT HEIGHT from SURFACING
ASTM	11" OR LESS
CSA	275mm OR LESS
EN	200mm OR LESS

EXIT HEIGHT CHART -for- 5'-0" TO 8'-0"	
STANDARD	EXIT HEIGHT from SURFACING
ASTM	7" TO 15"
CSA	175mm TO 380mm
EN	350mm OR LESS

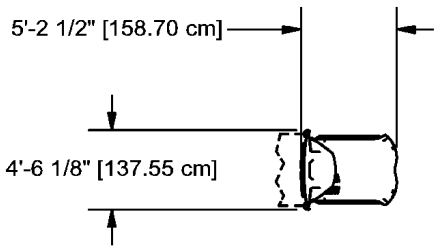

90507

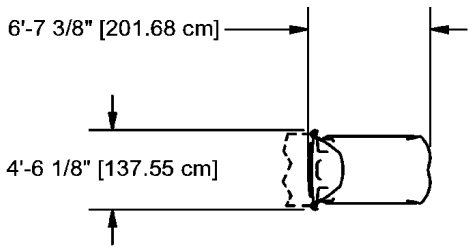

90508

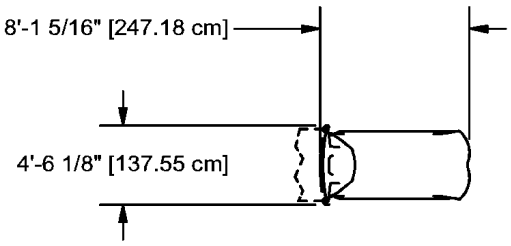

90509

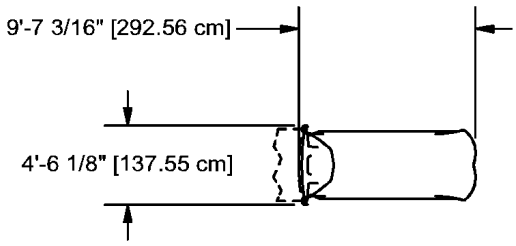

90510

TOP VIEWS

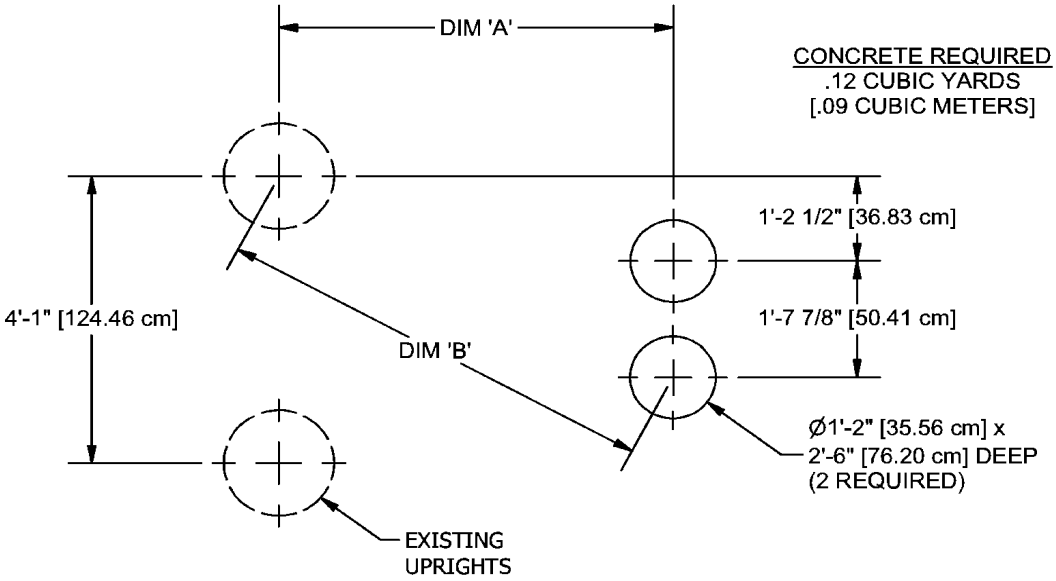

NOTE:
HOLE DEPTHS INDICATED ON ALL GROUND PLANS ARE MEASURED FROM THE FINISHED SURFACE. SEE DETAIL 032. ALL FOOTING DIMENSIONS ARE BASED ON LEVEL FINISHED SURFACE.

PART NO.	DIM "A"	DIM "B"
90507	3'-11 1/8" [120 cm]	4'-10 7/16" [148 cm]
90508	5'-4 1/8" [163 cm]	6'-0 7/8" [185 cm]
90509	6'-9 1/8" [206 cm]	7'-4 1/8" [224 cm]
90510	8'-3 3/8" [252 cm]	8'-9 3/16" [267 cm]

Parts List						
REF.	DESCRIPTION	90507	90508	90509	90510	PART NUMBER
1	3' RUMBLE & ROLL SLIDE	1	0	0	0	176401
1	4' DOUBLE SLIDE	0	1	0	0	176188
1	5' DOUBLE SLIDE	0	0	1	0	176189
1	6' DUELING WAVE SLIDE	0	0	0	1	176158
2	DOUBLE ZIP SLIDE HOOD	1	1	1	1	203860
3	FOOTBUCK	2	2	2	0	176385
3	FOOTBUCK	0	0	0	2	176384
	HARDWARE COMPLETE	1	0	0	0	204379
	HARDWARE COMPLETE	0	1	1	1	204380
	3/8" x 3/4" P.B.H.C.S. w/PATCH	4	4	4	4	812052*
	3/8" x 1 3/4" P.B.H.C.S. w/PATCH	4	4	4	4	812054*
	3/8" x 2 1/4" P.B.H.C.S. w/PATCH	2	2	2	2	812056*
	3/8" x 2 3/4" P.B.H.C.S. w/PATCH	2	2	2	2	812058*
	3/8" x 3" HEX HEAD BOLT	2	0	0	0	801011*
	3/8" FLAT WASHER (1 1/4" O.D.)	6	6	6	6	817424*
	3/8" FLAT WASHER (1" O.D.)	2	2	2	2	817401*
	3/8" FLAT WASHER	4	4	4	4	817410*
	3/8" LOCKWASHER	14	12	12	12	817334*
	3/8" HEX NUT	2	0	0	0	804053*
	6" EXTENSION	2	0	0	0	151080*

Unless Otherwise Specified, All Units of Measure are Each
** Included in Hardware*

Warning: During Installation, Hardware And Small Parts Are Choking Hazards For Young Children. Store Unused Parts Appropriately Until Assembly Is Completed. Once Assembly Is Completed, Remove Any Unused Parts From The Play Environment And Dispose/Save Them In A Secure Location.

Note: Peen Tee-Nuts and Flatwashers to match radius of pipe after assembly is complete.

Note: Loctite (supplied by others) should be used on any non-patch hardware.

DETAILS -for-
90507, 90508, 90509 & 90510

IMPORTANT

TO REDUCE THE RISK OF CLOTHING ENTANGLEMENT IN COMPLIANCE WITH ASTM F1487, ANY BOLT END PROTRUDING MORE THAN TWO FULL THREADS BEYOND THE FACE OF THE NUT SHALL BE CUT-OFF FLUSH, FILED SMOOTH AND TREATED TO PREVENT CORROSION.

NOTE: LOCTITE (SUPPLIED BY OTHERS) SHOULD BE USED ON ALL THREADED HARDWARE.

NOTE: AFTER ASSEMBLY IS COMPLETE, PEEN TEE-NUTS AND FLATWASHERS TO MATCH RADIUS OF PIPE.

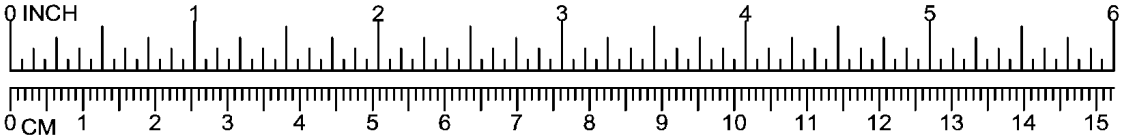

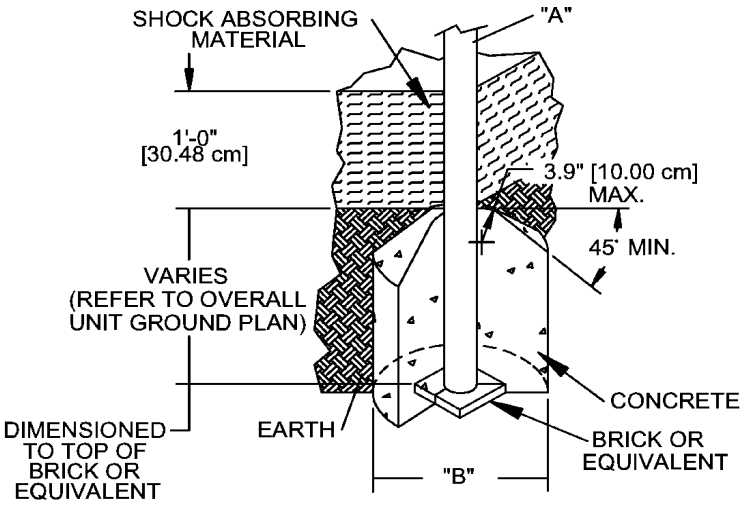

DIA. "A" (PIPE SIZE)	DIA. "B" (FOOTING SIZE)
1 1/16" [2.70 cm]	1'-2" [35.56 cm]
1 5/16" [3.33 cm]	1'-2" [35.56 cm]
1 5/8" [4.13 cm]	1'-2" [35.56 cm]
1 7/8" [4.83 cm]	1'-2" [35.56 cm]
2 3/8" [6.03 cm]	1'-2" [35.56 cm]
3 1/2" [8.89 cm]	1'-6" [45.72 cm]
5" [12.70 cm]	1'-6" [45.72cm]
TRACK RIDE & SWINGS	
5" [12.70 cm]	2'-0" [60.96 cm]
TREE SCAPE	
5" [12.70 cm]	4'-0" [121.92 cm]

NOTES:
- -SLOPED FOOTING IS A REQUIREMENT OF EUROPEAN STANDARD EN1176-1 ONLY
- -SUGGESTED MINIMUM CONCRETE RATING: 3000 PSI

032

SHOCK ABSORBING PROPERTIES OF SURFACING MATERIALS VARY. IF YOU DETERMINE THAT LESS THAN 1'-0" [30.48cm] OF SURFACING IS REQUIRED, MAKE UP THE DIFFERENCE IN ELEVATION WITH EARTH, BEFORE APPLYING SURFACING.

LEG (PIPE DIA.)	BOLT REQUIRED
1 5/16" [3.3 cm]	3/8" x 2" HEX HEAD (801007)
1 5/8" [4.1 cm]	3/8" x 2 1/2" HEX HEAD (801009)
1 7/8" [4.7 cm]	3/8" x 3" HEX HEAD (801011)
2 3/8" [6.0 cm]	3/8" x 3 1/2" HEX HEAD (801013)
2 7/8" [7.3 cm]	3/8" x 4" HEX HEAD (801015)

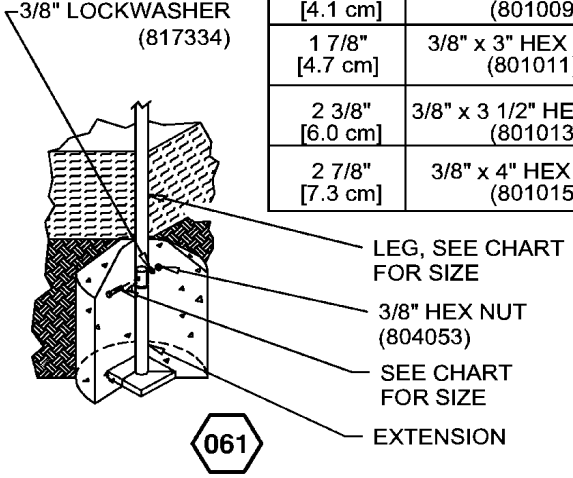

061

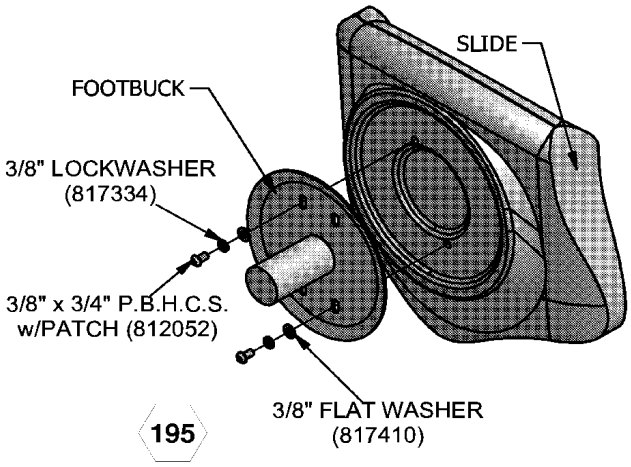

195

DETAILS -for-
90507, 90508, 90509 & 90510

*I*MPORTANT

TO REDUCE THE RISK OF CLOTHING ENTANGLEMENT IN COMPLIANCE WITH ASTM F1487, ANY BOLT END PROTRUDING MORE THAN TWO FULL THREADS BEYOND THE FACE OF THE NUT SHALL BE CUT-OFF FLUSH, FILED SMOOTH AND TREATED TO PREVENT CORROSION.

NOTE: LOCTITE (SUPPLIED BY OTHERS) SHOULD BE USED ON ALL THREADED HARDWARE.

NOTE: AFTER ASSEMBLY IS COMPLETE, PEEN TEE-NUTS AND FLATWASHERS TO MATCH RADIUS OF PIPE.

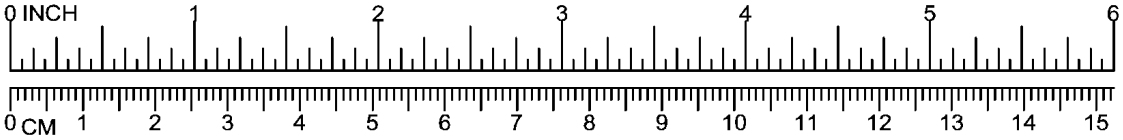

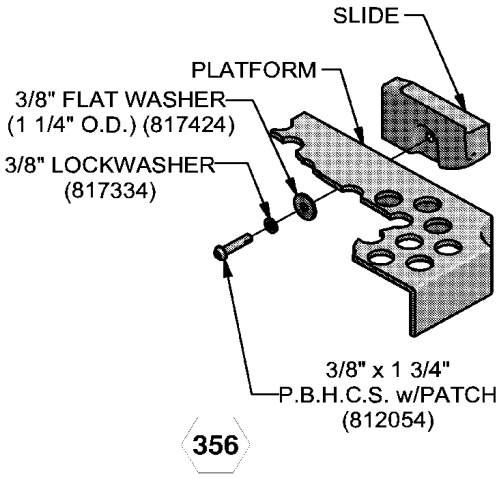

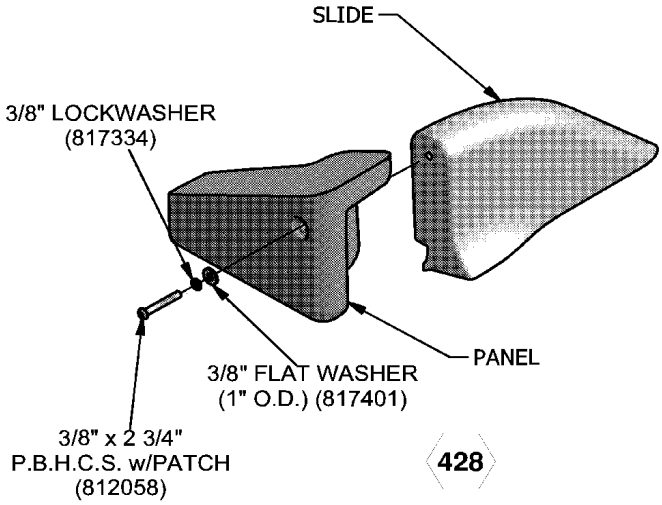

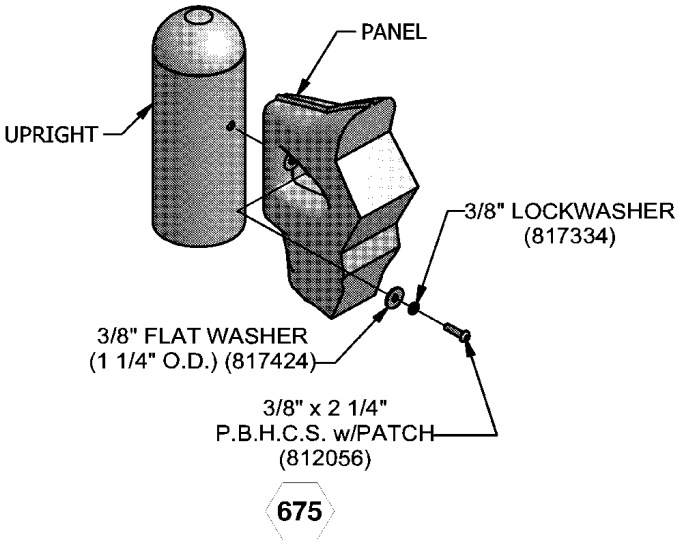

PowerScape®

GameTime®

A PLAYCORE Company

1-800-235-2440

ISSUED/REVISED: 11/12/12

90610

CONTOURED SEAT PANEL

⬡ = INSTALLATION DETAIL

○ = PARTS LIST REFERENCE

UP TO 5'-0"

UP TO 7'-0"

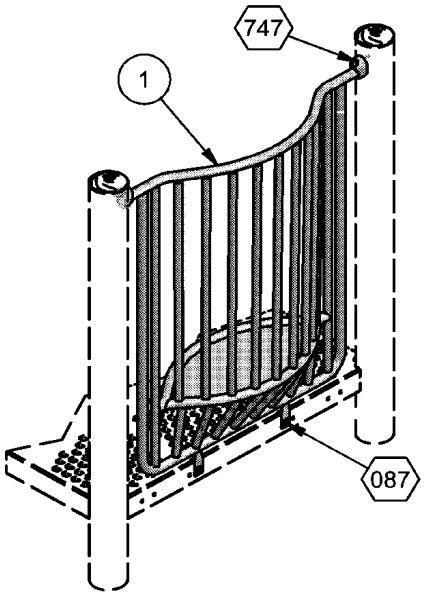

ASSEMBLY DRAWING

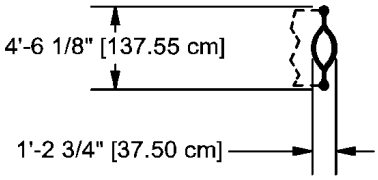

TOP VIEW

INSTALLATION INSTRUCTIONS

1. Before assembling this equipment, read the enclosed INSTALLER INSTRUCTIONS in the installation booklet; follow all the instructions during installation.
2. Assemble parts as shown in the ASSEMBLY DRAWING. Refer to the assembly details for the specific hardware required in each connection.

Parts List			
REF.	DESCRIPTION	QTY	PART NUMBER
1	SEAT ENCLOSURE WELD ASS'Y	1	204937
	TRU-LOC	2	A03650
	HARDWARE COMPLETE	1	204943
	3/8" x 3/4" P.B.H.C.S. w/PATCH	2	812052*
	3/8" x 2" P.B.H.C.S. w/PATCH	2	812055*
	3/8" FLAT WASHER (1 1/4" O.D.)	2	817424*
	3/8" LOCKWASHER	4	817334*
	3/8" T-NUT	2	804556*
	ALUM. PIN	2	203568*

Unless Otherwise Specified, All Units of Measure are Each
** Included in Hardware*

Warning: During Installation, Hardware And Small Parts Are Choking Hazards For Young Children. Store Unused Parts Appropriately Until Assembly Is Completed. Once Assembly Is Completed, Remove Any Unused Parts From The Play Environment And Dispose/Save Them In A Secure Location.

Note: Peen Tee-Nuts and Flatwashers to match radius of pipe after assembly is complete.

Note: Loctite (supplied by others) should be used on any non-patch hardware.

DETAILS -for-
90610

*I*MPORTANT

TO REDUCE THE RISK OF CLOTHING ENTANGLEMENT IN COMPLIANCE WITH ASTM F1487, ANY BOLT END PROTRUDING MORE THAN TWO FULL THREADS BEYOND THE FACE OF THE NUT SHALL BE CUT-OFF FLUSH, FILED SMOOTH AND TREATED TO PREVENT CORROSION.

NOTE: LOCTITE (SUPPLIED BY OTHERS) SHOULD BE USED ON ALL THREADED HARDWARE.

NOTE: AFTER ASSEMBLY IS COMPLETE, PEEN TEE-NUTS AND FLATWASHERS TO MATCH RADIUS OF PIPE.

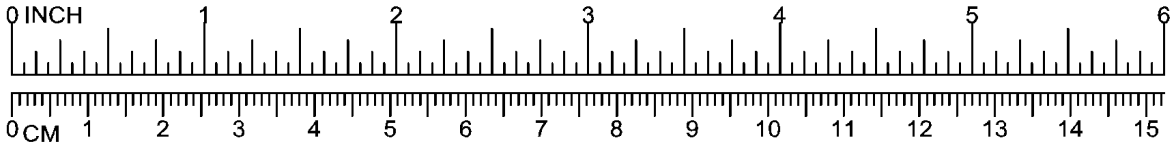

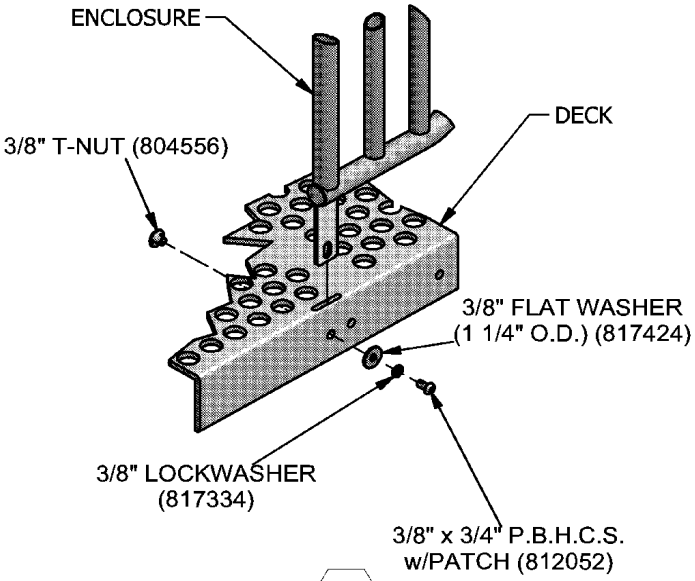

087

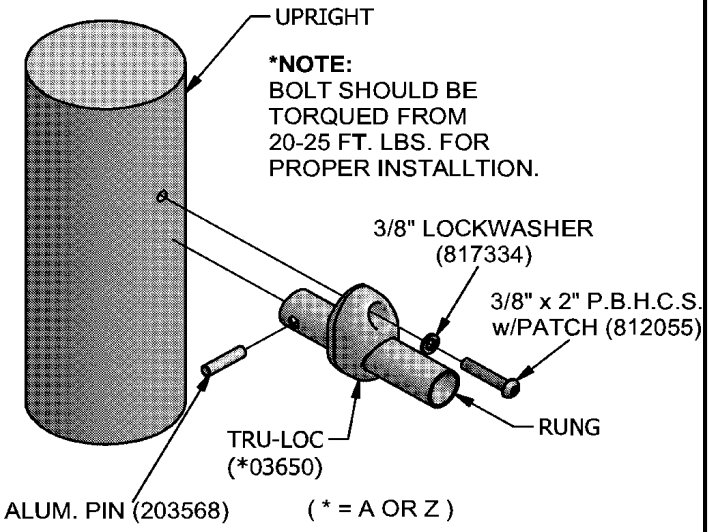

747

PowerScape®

GameTime®

A PLAYCORE Company

1-800-235-2440

ISSUED/REVISED: 9/2/2010

90837 ANIMAL TRACKERS ROTOGEN

= INSTALLATION DETAIL

= PARTS LIST REFERENCE

UP TO 5'

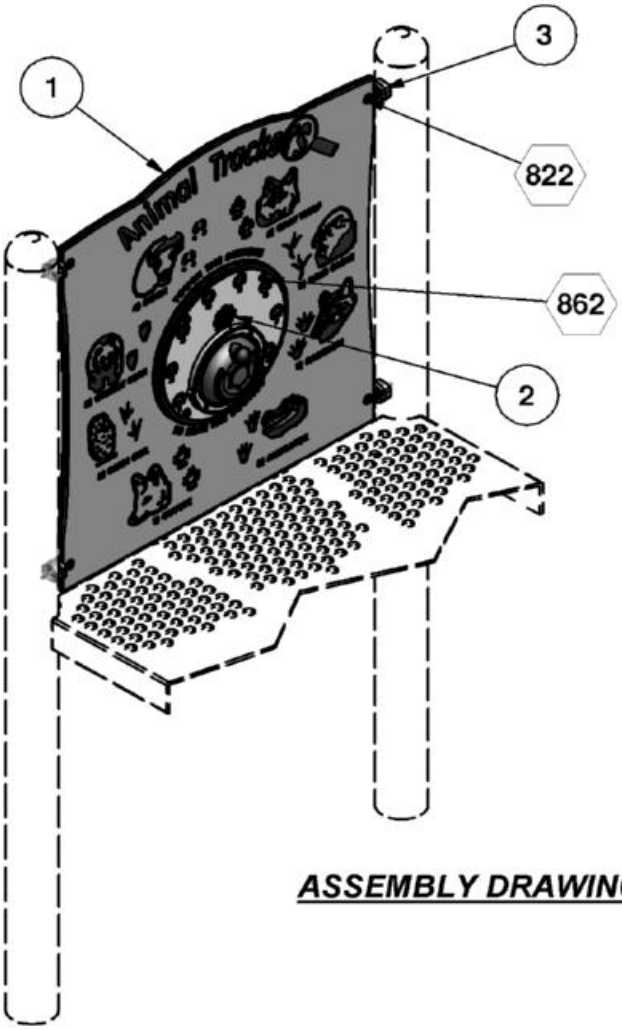

ASSEMBLY DRAWING

INSTALLATION INSTRUCTIONS

1. Before assembling this equipment, read the enclosed INSTALLATION INSTRUCTIONS in the installation booklet; follow all the instructions during installation.
2. Assemble parts as shown in the ASSEMBLY DRAWING. Refer to the assembly details for the specific hardware required in each connection.

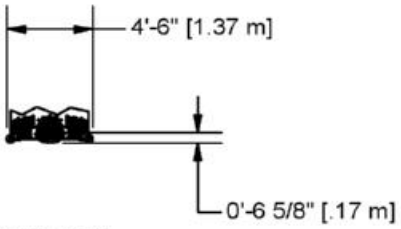

TOP VIEW

Parts List			
REF.	DESCRIPTION	QTY	PART NUMBER
1	ANIMAL TRACKERS HDPE PANEL	1	211973
2	ANIMAL TRACKERS ROTOGEN	1	211974
3	TRU-LOC PANEL ATTACHMENT	4	K03861
	HARDWARE COMPLETE	1	211977
	3/8" x 1" P.B.H.C.S. w/PATCH	4	812050*
	3/8" LOCKWASHER	12	817334*
	3/8" FLAT WASHER	4	817410*
	3/8" BARREL NUT	4	804804*
	3/8" T-NUT	4	804556*
	3/8" x 1 3/4" HEX HEAD BOLT	4	801006*
	3/8" x 1 1/2" P.B.H.C.S. w/PATCH	4	812053*

Unless Otherwise Specified, All Units of Measure are Each
** Included in Hardware*

Warning: During Installation, Hardware And Small Parts Are Choking Hazards For Young Children. Store Unused Parts Appropriately Until Assembly Is Completed. Once Assembly Is Completed, Remove Any Unused Parts From The Play Environment And Dispose/Save Them In A Secure Location.

Note: Peen Tee-Nuts and Flatwashers to match radius of pipe after assembly is complete.

DETAILS -for-
90837

Important

To Reduce the Risk of Clothing Entanglement in Compliance with ASTM F1487, Any Bolt End Protruding More Than Two Full Threads Beyond the Face of the Nut Shall Be Cut-Off Flush, Filed Smooth and Treated to Prevent Corrosion.

Note: Loctite (Supplied by Others) Should be Used on All Threaded Hardware.

Note: After Assembly is Complete, Peen Tee-Nuts and Flatwashers to Match Radius of Pipe.

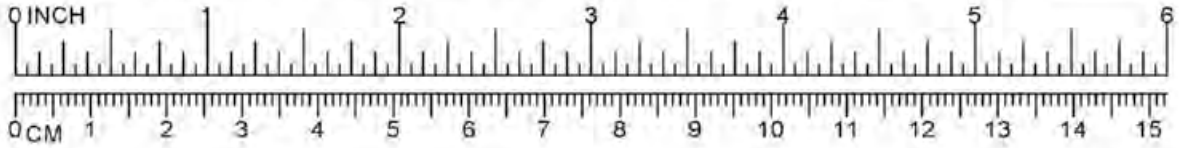

NOTE: HEX BOLTS SHOULD BE TORQUED FROM 20-25 FT. LBS. FOR PROPER INSTALLATION.

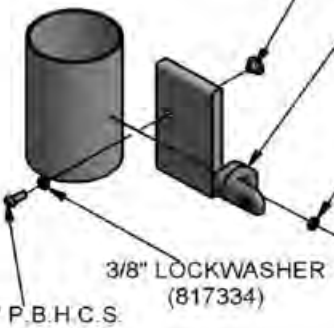

(*=B,T,W,G, or K)

822

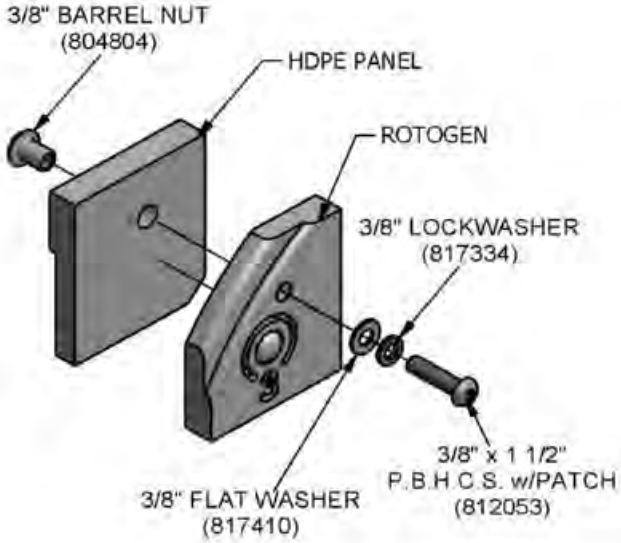

862

PowerScape

GameTime

A PLAYCORE Company

1-800-235-2440

ISSUED/REVISED: 4/25/18

91151 CLIMBER ENTRYWAY TIMBERS

⬡ = INSTALLATION DETAIL

○ = PARTS LIST REFERENCE

INSTALLATION INSTRUCTIONS

1. Before assembling this equipment, read the enclosed INSTALLER INSTRUCTIONS in the installation booklet; follow all the instructions during installation.
2. Assemble parts as shown in the ASSEMBLY DRAWING. Refer to the assembly details for the specific hardware required in each connection.

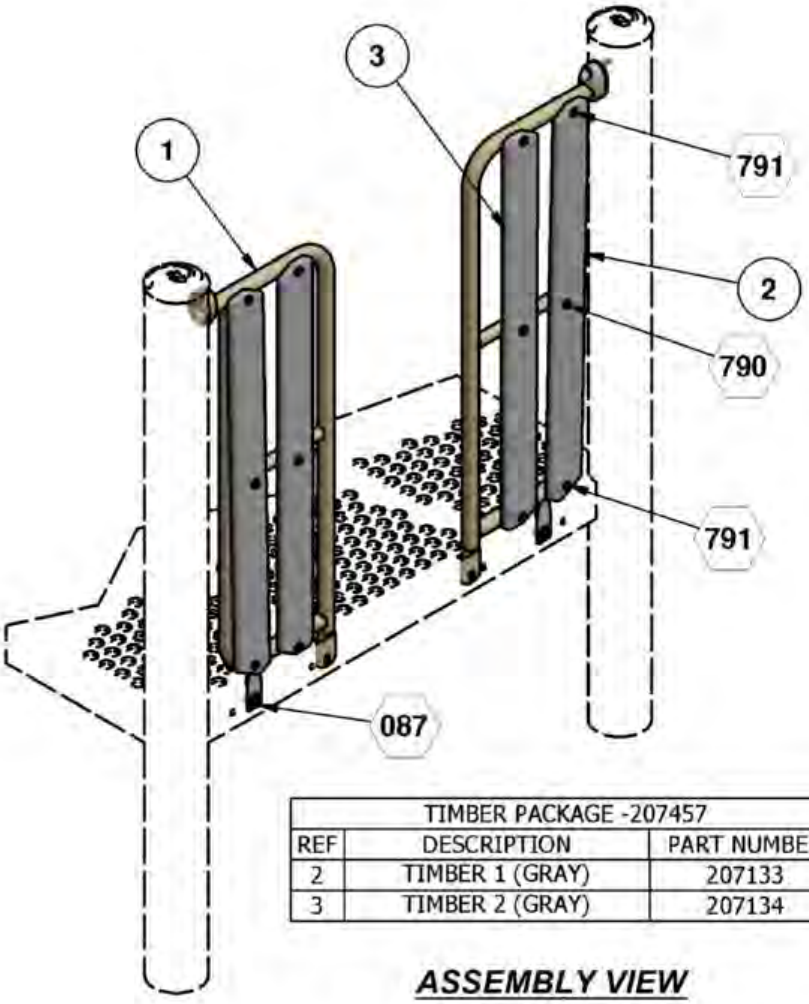

TIMBER PACKAGE -207457		
REF	DESCRIPTION	PART NUMBER
2	TIMBER 1 (GRAY)	207133
3	TIMBER 2 (GRAY)	207134

ASSEMBLY VIEW

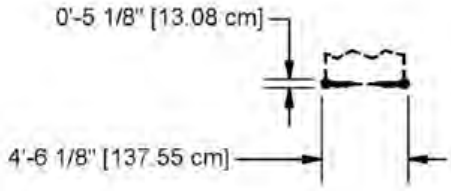

TOP VIEW

Parts List			
REF	DESCRIPTION	QTY	PART NUMBER
1	TIMBER ENTRYWAY WELD ASS'Y	2	207129
	TIMBER PACKAGE	1	207457
2	TIMBER 1	2	207133**
3	TIMBER 2	2	207134**
	TRU-LOC	2	A03650
	HARDWARE COMPLETE	1	207557
	5/16" x 1 3/4" P.B.H.C.S. w/Patch	4	812047*
	5/16" x 2" P.B.H.C.S. w/PATCH	8	812046*
	5/16" FLAT WASHER (5/8" O.D.)	12	817406*
	5/16" T-NUT	12	804555*
	3/8" LOCK WASHER	4	817334*
	ALUM. PIN	2	203568*
	3/8" x 2" P.B.H.C.S. w/PATCH	2	812055*
	3/8" x 3/4" P.B.H.C.S. w/PATCH	2	812052*
	3/8" FLAT WASHER (1 1/4" O.D.)	2	817424*
	3/8" T-NUT	2	804556*

Unless Otherwise Specified, All Units of Measure are Each
** Included in Hardware*
*** Included in Timber Package*

Warning: During Installation, Hardware And Small Parts Are Choking Hazards For Young Children. Store Unused Parts Appropriately Until Assembly Is Completed. Once Assembly Is Completed, Remove Any Unused Parts From The Play Environment And Dispose/Save Them In A Secure Location.

Note: Peen Tee-Nuts and Flatwashers to match radius of pipe after assembly is complete.

Note: Loctite (supplied by others) should be used on any non-patch hardware.

DETAILS -for-
91151

Important

To Reduce the Risk of Clothing Entanglement in Compliance with ASTM F1487, Any Bolt End Protruding More Than Two Full Threads Beyond the Face of the Nut Shall Be Cut-Off Flush, Filed Smooth and Treated to Prevent Corrosion.

Note: Loctite (Supplied by Others) Should be Used on All Threaded Hardware

Note: After Assembly is Complete, Peen Tee-Nuts and Flatwashers to Match Radius of Pipe.

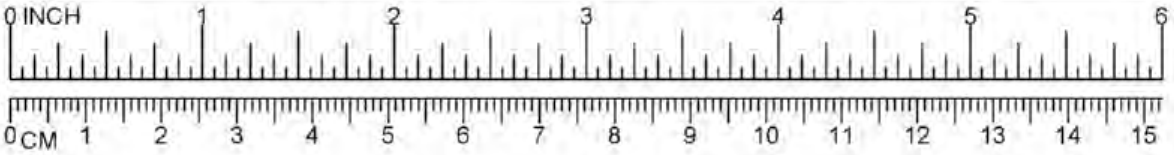

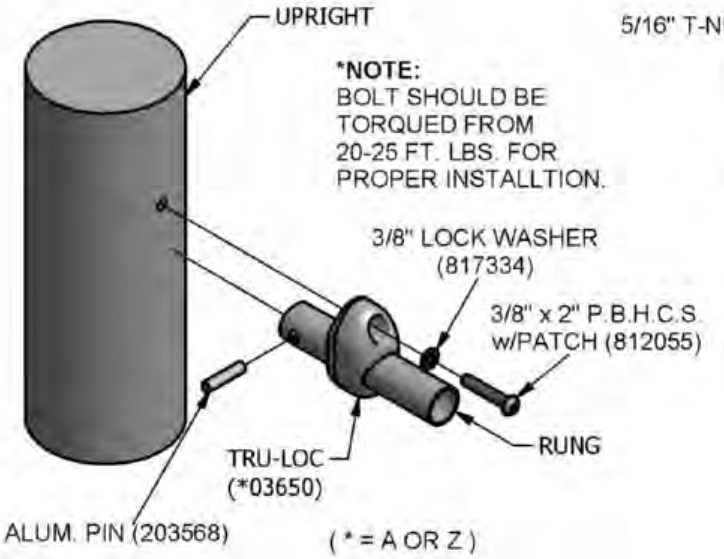

747

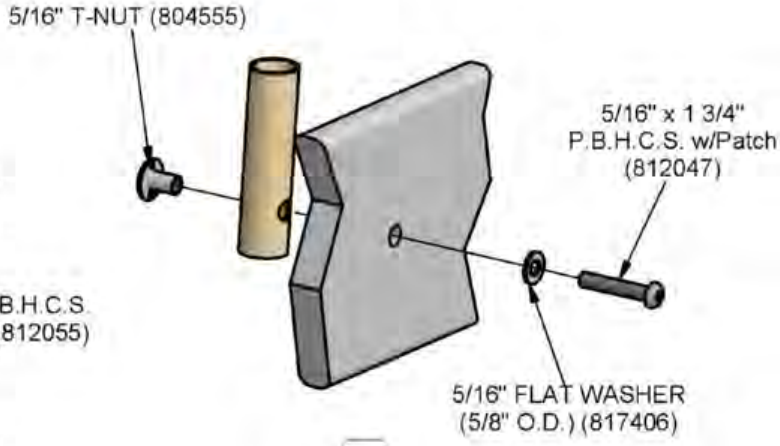

790

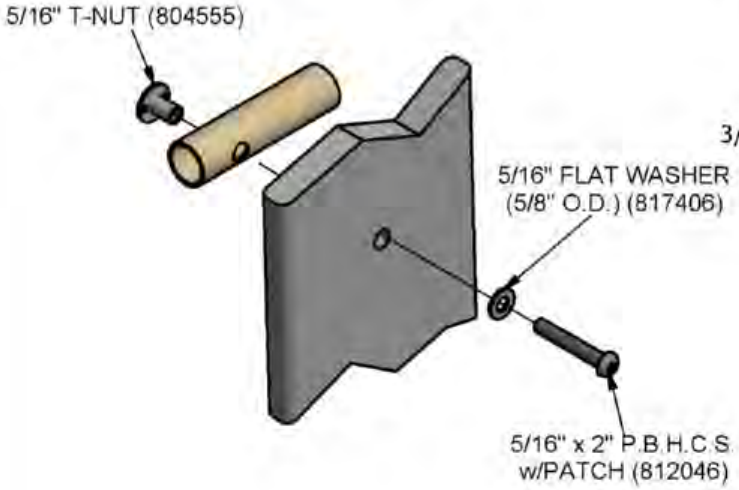

791

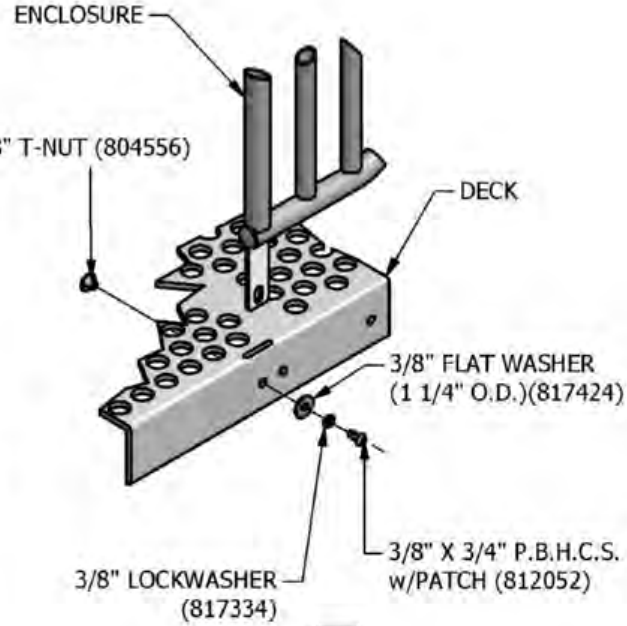

087

PowerScape

GameTime

A PLAYCORE Company

1-800-235-2440

ISSUED/REVISED: 5/24/17

91178 TRANSFER PLATFORM TIMBERS

3'-0" RISE	91178
4'-0" RISE	91179
5'-0" RISE	91180

⬡ = INSTALLATION DETAIL

○ = PARTS LIST REFERENCE

INSTALLATION INSTRUCTIONS

1. Before assembling this equipment, read the enclosed INSTALLER INSTRUCTIONS in the installation booklet; follow all the instructions during installation.
2. Assemble parts as shown in the ASSEMBLY DRAWING. Refer to the assembly details for the specific hardware required in each connection.

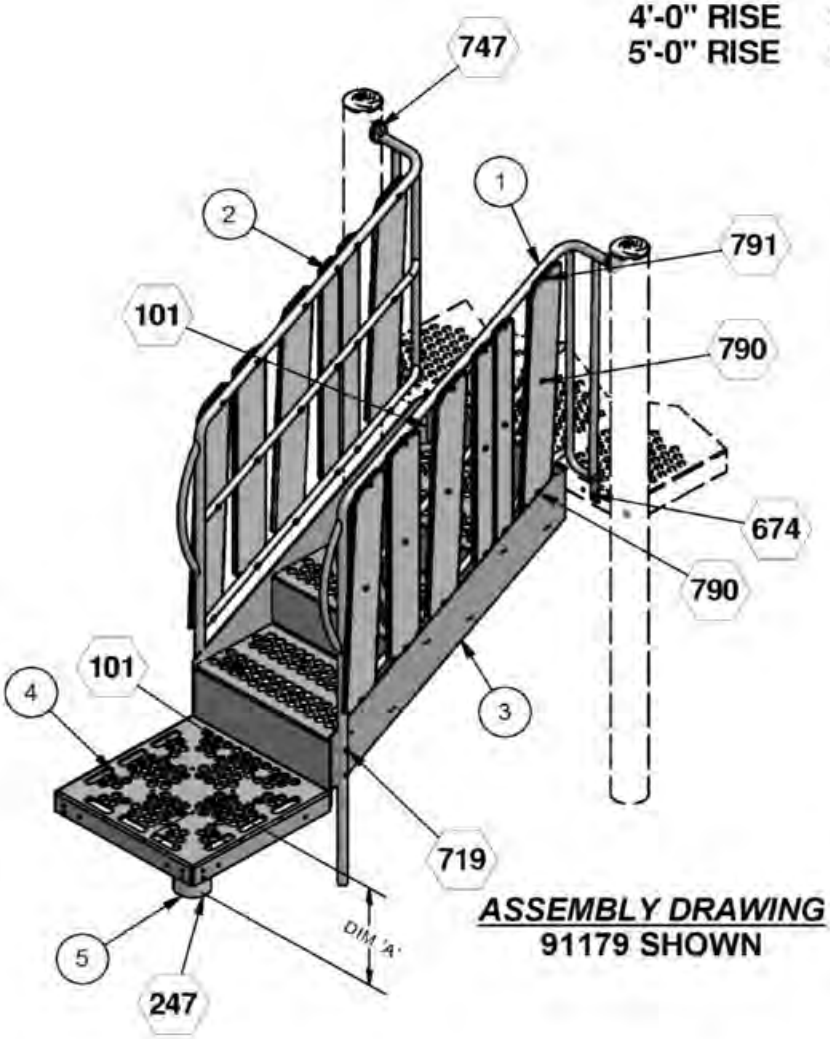

ASSEMBLY DRAWING
91179 SHOWN

Table	
COMPONENT	DIM 'A'
90029	1'-0" [30.49 cm]
90030	1'-4" [40.64 cm]
90031	1'-0" [30.55 cm]

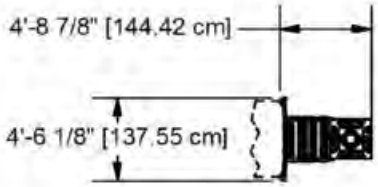

91178

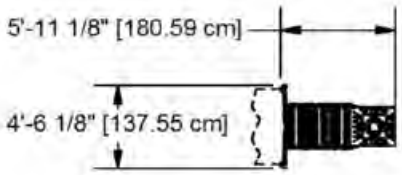

91179

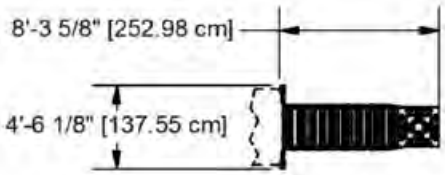

91180

TOP VIEWS

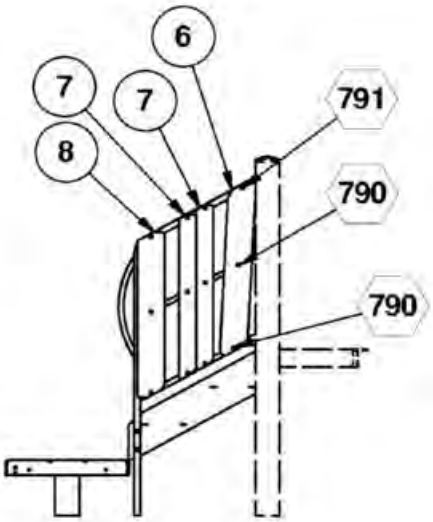

RIGHT

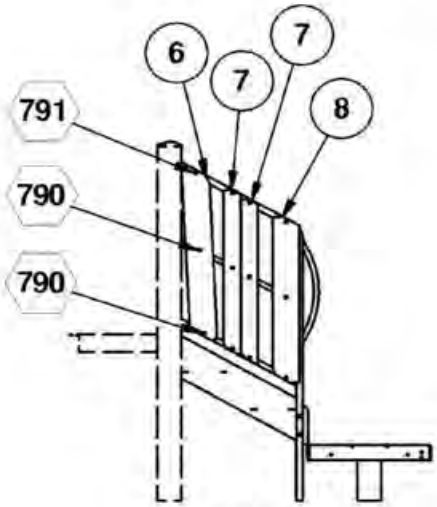

LEFT

TIMBER PACKAGE 207454		
REF	DESCRIPTION	PART NUMBER
6	TIMBER 11 (SAND)	207195
7	TIMBER 12 (GRAY)	207196
8	TIMBER 13 (TUDOR BROWN)	207197

TIMBER LOCATION
91178 SHOWN

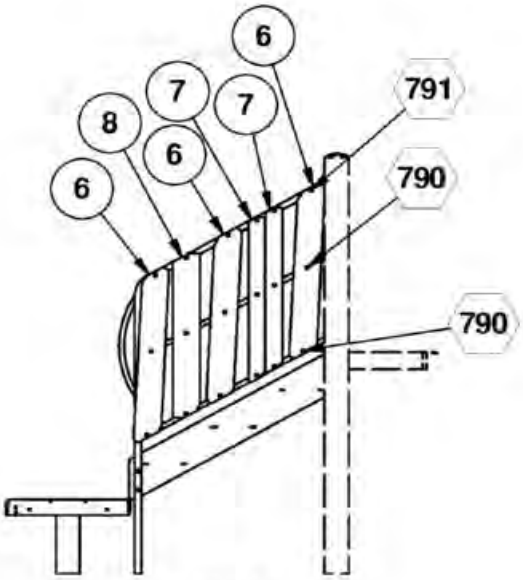

RIGHT

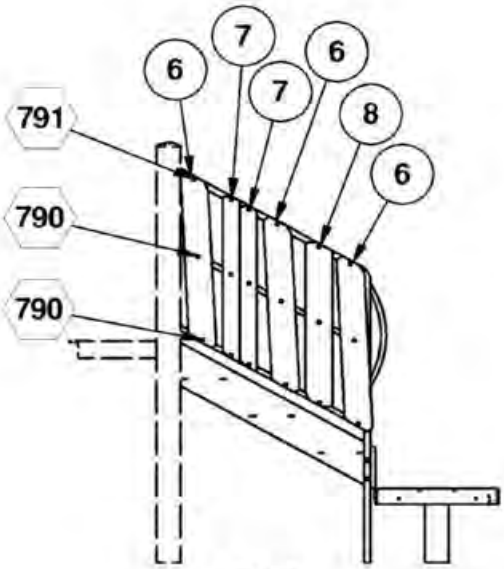

LEFT

TIMBER PACKAGE 207455		
REF	DESCRIPTION	PART NUMBER
6	TIMBER 11 (SAND)	207195
7	TIMBER 12 (GRAY)	207196
8	TIMBER 13 (TUDOR BROWN)	207197

TIMBER LOCATION
91179 SHOWN

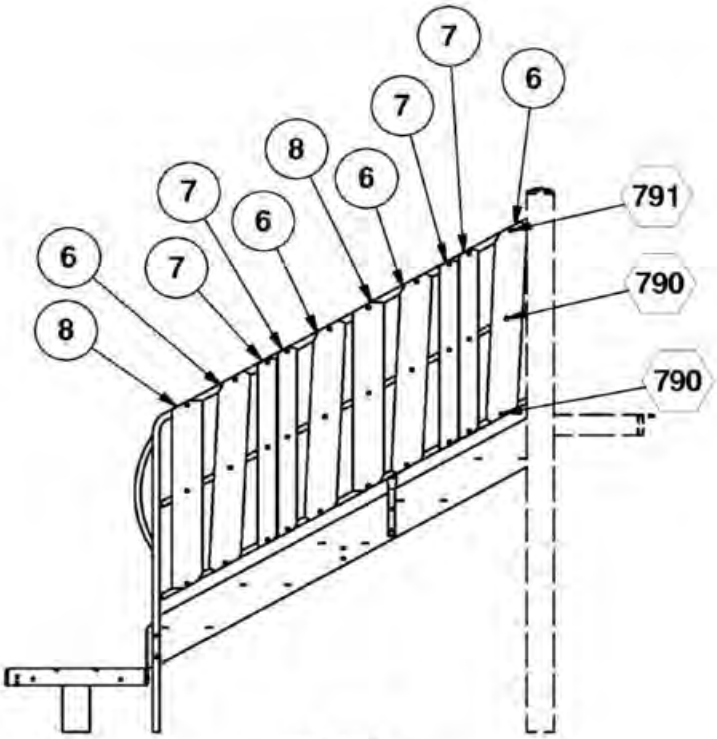

RIGHT

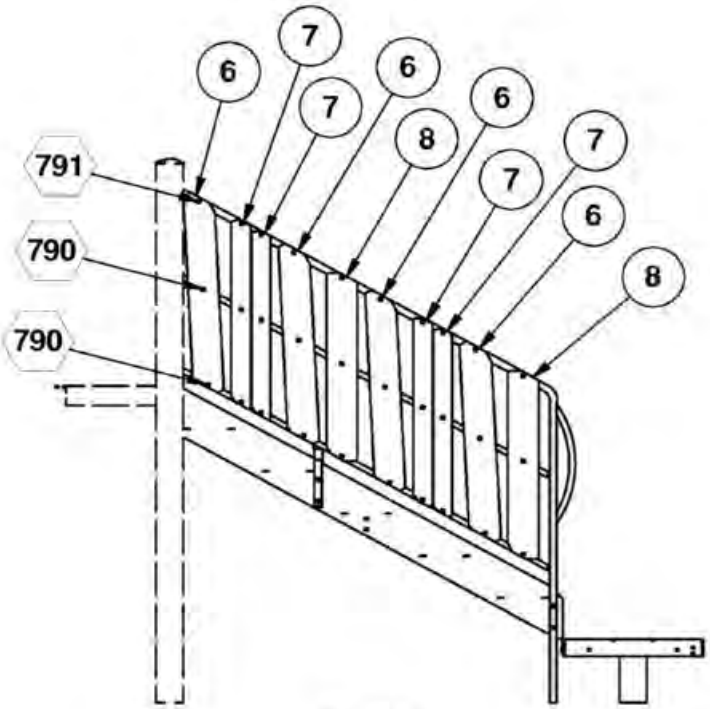

LEFT

TIMBER PACKAGE 207456		
REF	DESCRIPTION	PART NUMBER
6	TIMBER 11 (SAND)	207195
7	TIMBER 12 (GRAY)	207196
8	TIMBER 13 (TUDOR BROWN)	207197

TIMBER LOCATION
91180 SHOWN

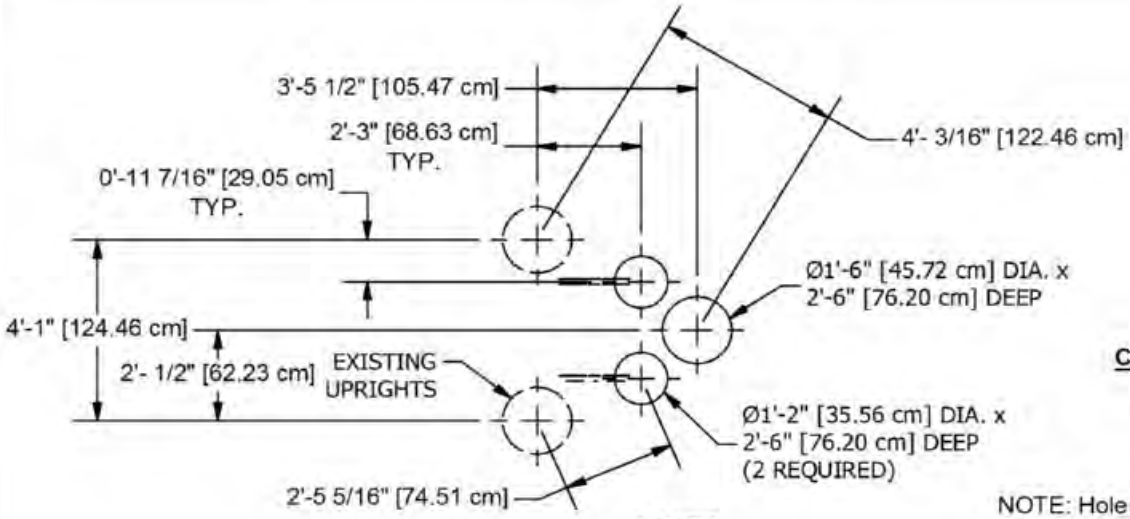

91178

CONCRETE REQUIRED
.22 Cubic Yards
[.17 Cubic Meters]

NOTE: Hole depths indicated on all ground plans are measured from the finished surface. See Detail 032. All fooring dimensions are based on level finished surface.

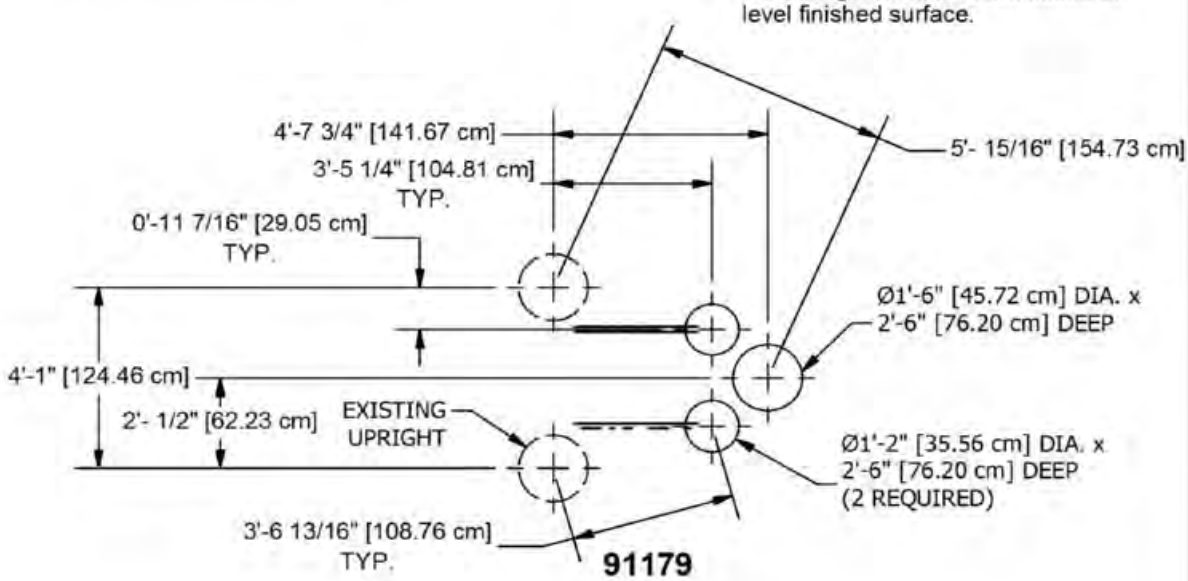

91179

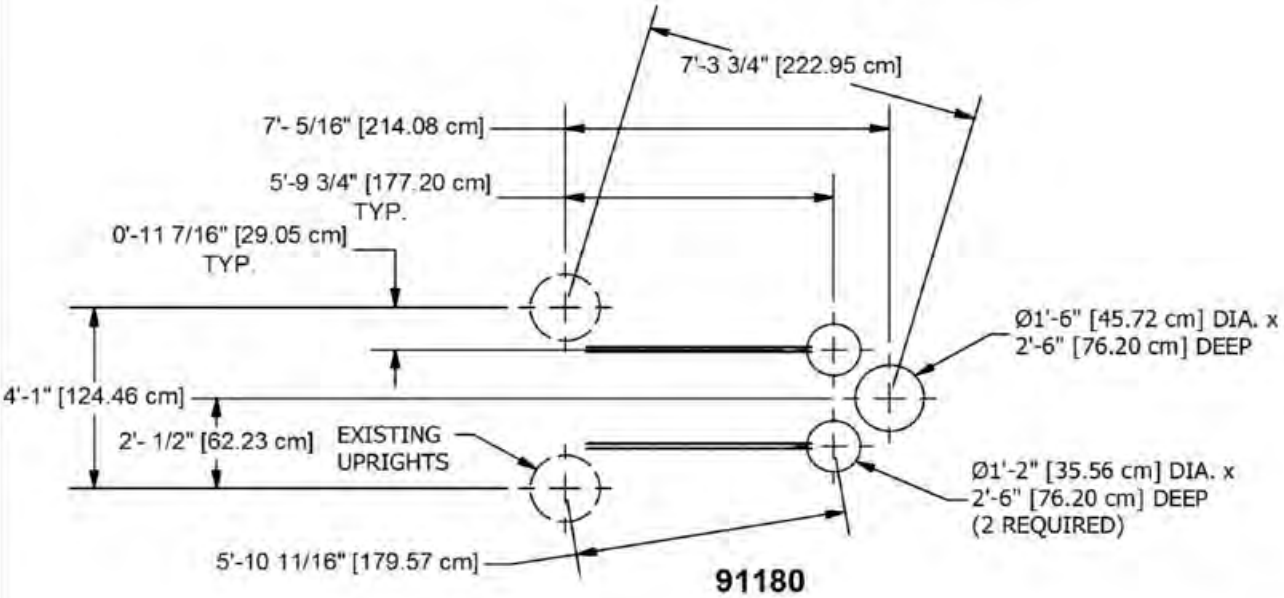

91180

GROUND PLANS

Parts List					
REF.	DESCRIPTION	91178	91179	91180	PART NUMBER
1	RIGHT TRANSFER PLATFORM WELD ASSEMBLY	1	0	0	207168
1	RIGHT TRANSFER PLATFORM WELD ASSEMBLY	0	1	0	207178
1	RIGHT TRANSFER PLATFORM WELD ASSEMBLY	0	0	1	207190
2	LEFT TRANSFER PLATFORM WELD ASSEMBLY	1	0	0	207163
2	LEFT TRANSFER PLATFORM WELD ASSEMBLY	0	1	0	207173
2	LEFT TRANSFER PLATFORM WELD ASSEMBLY	0	0	1	207183
3	STEP ASS'Y	1	0	0	160670
3	STEP ASS'Y	0	1	0	160674
3	STEP ASS'Y	0	0	1	160667
4	COATED PLATFORM	1	1	1	160645
5	UPRIGHT ASS'Y	1	0	1	157034
5	UPRIGHT ASS'Y	0	1	0	160662
	TRU-LOC	2	2	2	A03650
	TIMBER PACKAGE	1	0	0	207454
6	TIMBER 11	2	0	0	207195**
7	TIMBER 12	4	0	0	207196**
8	TIMBER 13	2	0	0	207197**
	TIMBER PACKAGE	0	1	0	207455
6	TIMBER 11	0	6	0	207195**
7	TIMBER 12	0	4	0	207196**
8	TIMBER 13	0	2	0	207197**
	TIMBER PACKAGE	0	0	1	207456
6	TIMBER 11	0	0	8	207195**
7	TIMBER 12	0	0	8	207196**
8	TIMBER 13	0	0	4	207197**
	HARDWARE COMPLETE	1	0	0	207201
	HARDWARE COMPLETE	0	1	0	207202
	HARDWARE COMPLETE	0	0	1	207203
	5/16" x 1 3/4" P.B.H.C.S. w/Patch	16	24	42	812047*
	5/16" x 2" P.B.H.C.S. w/PATCH	8	12	18	812046*
	5/16" FLAT WASHER (5/8" O.D.)	24	36	60	817406*
	5/16" T-NUT	24	36	60	804555*
	3/8" x 3/4" P.B.H.C.S. w/PATCH	9	9	9	812052*
	3/8" x 2" P.B.H.C.S. w/PATCH	2	2	2	812055*
	3/8" x 1 3/4" P.B.H.C.S. w/PATCH	4	4	4	812054*
	3/8" FLAT WASHER (1 1/4" O.D.)	6	6	6	817424*
	3/8" LOCK WASHER	15	15	15	817334*
	3/8" T-NUT	13	13	13	804556*
	ALUM. PIN	2	2	2	203568*

Unless Otherwise Specified, All Units of Measure are Each
** Included in Hardware*
*** Included in Timber Package*

Warning: During Installation, Hardware And Small Parts Are Choking Hazards For Young Children. Store Unused Parts Appropriately Until Assembly Is Completed. Once Assembly Is Completed, Remove Any Unused Parts From The Play Environment And Dispose/Save Them In A Secure Location.

Note: Peen Tee-Nuts and Flatwashers to match radius of pipe after assembly is complete.

Note: Loctite (supplied by others) should be used on any non-patch hardware.

DETAILS -for-
91178 , 91179, 91180

*I*MPORTANT

TO REDUCE THE RISK OF CLOTHING ENTANGLEMENT IN COMPLIANCE WITH ASTM F1487, ANY BOLT END PROTRUDING MORE THAN TWO FULL THREADS BEYOND THE FACE OF THE NUT SHALL BE CUT-OFF FLUSH, FILED SMOOTH AND TREATED TO PREVENT CORROSION.

NOTE: LOCTITE (SUPPLIED BY OTHERS) SHOULD BE USED ON ALL THREADED HARDWARE.

NOTE: AFTER ASSEMBLY IS COMPLETE, PEEN TEE-NUTS AND FLATWASHERS TO MATCH RADIUS OF PIPE.

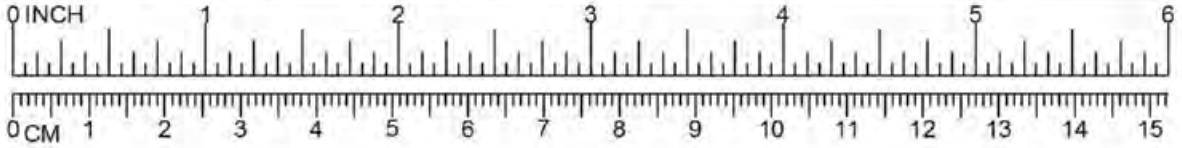

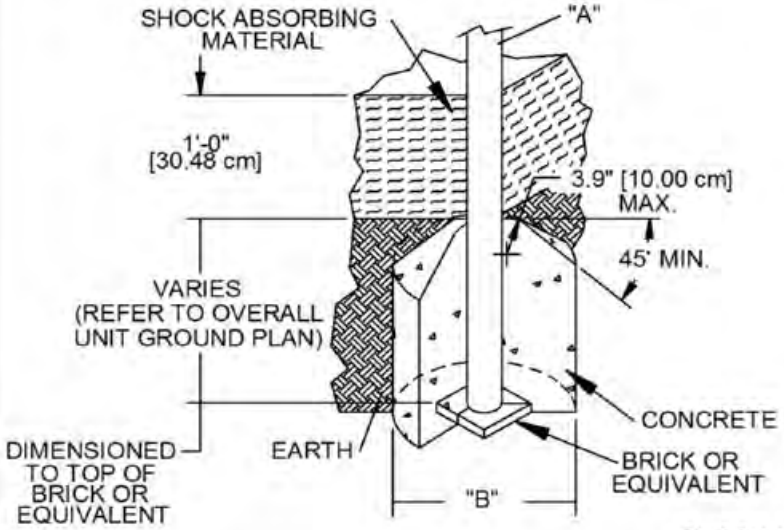

DIA. "A" (PIPE SIZE)	DIA. "B" (FOOTING SIZE)
1 1/16" [2.70 cm]	1'-2" [35.56 cm]
1 5/16" [3.33 cm]	1'-2" [35.56 cm]
1 5/8" [4.13 cm]	1'-2" [35.56 cm]
1 7/8" [4.83 cm]	1'-2" [35.56 cm]
2 3/8" [6.03 cm]	1'-2" [35.56 cm]
3 1/2" [8.89 cm]	1'-6" [45.72 cm]
5" [12.70 cm]	1'-6" [45.72cm]
TRACK RIDE & SWINGS	
5" [12.70 cm]	2'-0" [60.96 cm]
TREE SCAPE	
5" [12.70 cm]	4'-0" [121.92 cm]

NOTES:
-SLOPED FOOTING IS A REQUIREMENT OF EUROPEAN STANDARD EN1176-1 ONLY
-SUGGESTED MINIMUM CONCRETE RATING: 3000 PSI

032

SHOCK ABSORBING PROPERTIES OF SURFACING MATERIALS VARY. IF YOU DETERMINE THAT LESS THAN 1'-0" [30.48cm] OF SURFACING IS REQUIRED, MAKE UP THE DIFFERENCE IN ELEVATION WITH EARTH, BEFORE APPLYING SURFACING.

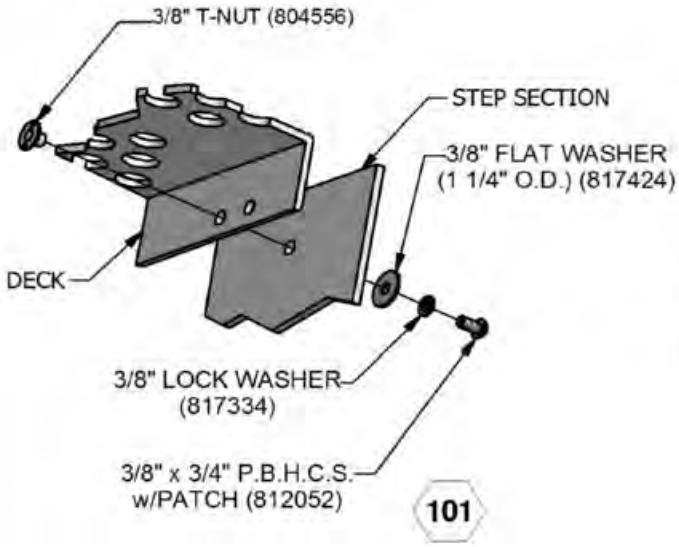

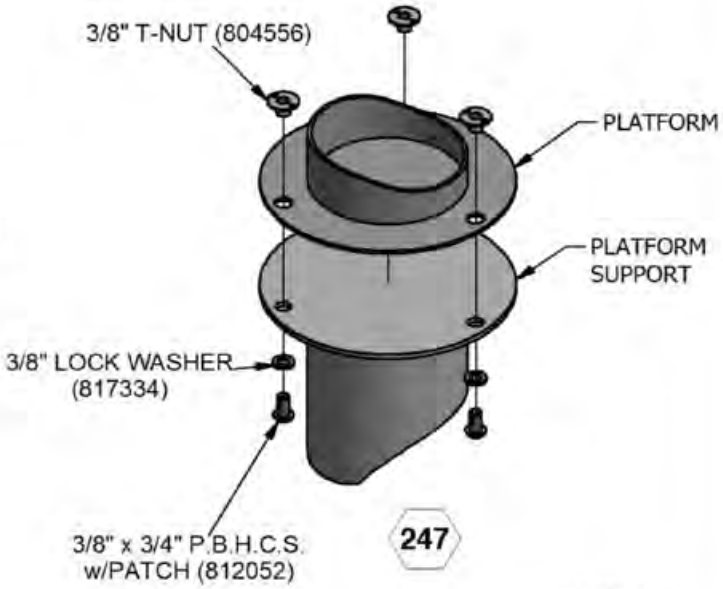

DETAILS -for-
91178 , 91179, 91180

*I*MPORTANT

TO REDUCE THE RISK OF CLOTHING ENTANGLEMENT IN COMPLIANCE WITH ASTM F1487, ANY BOLT END PROTRUDING MORE THAN TWO FULL THREADS BEYOND THE FACE OF THE NUT SHALL BE CUT-OFF FLUSH, FILED SMOOTH AND TREATED TO PREVENT CORROSION.

NOTE: LOCTITE (SUPPLIED BY OTHERS) SHOULD BE USED ON ALL THREADED HARDWARE.

NOTE: AFTER ASSEMBLY IS COMPLETE, PEEN TEE-NUTS AND FLATWASHERS TO MATCH RADIUS OF PIPE.

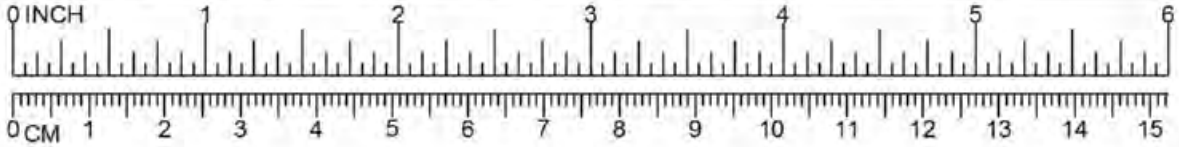

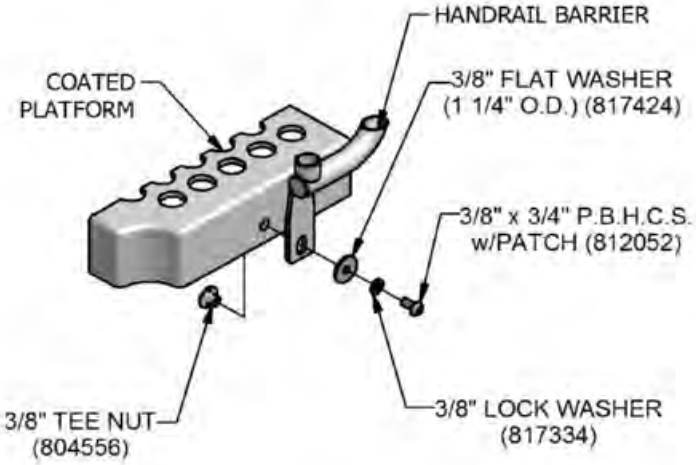

674

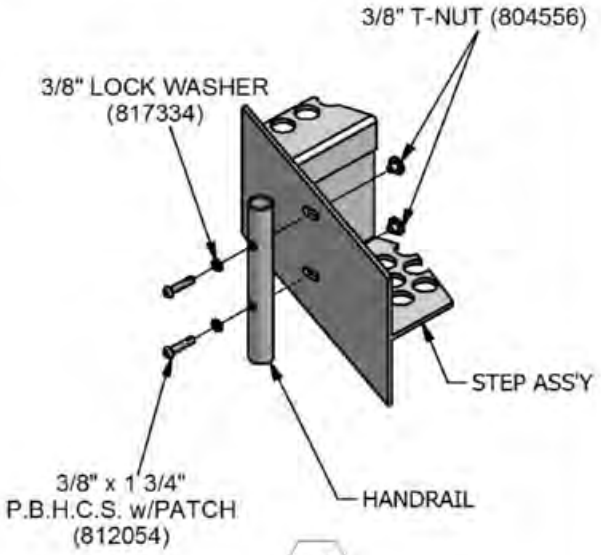

719

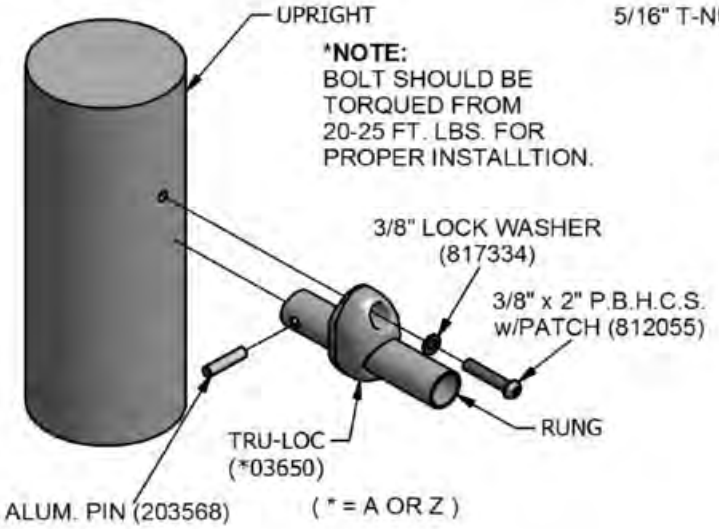

747

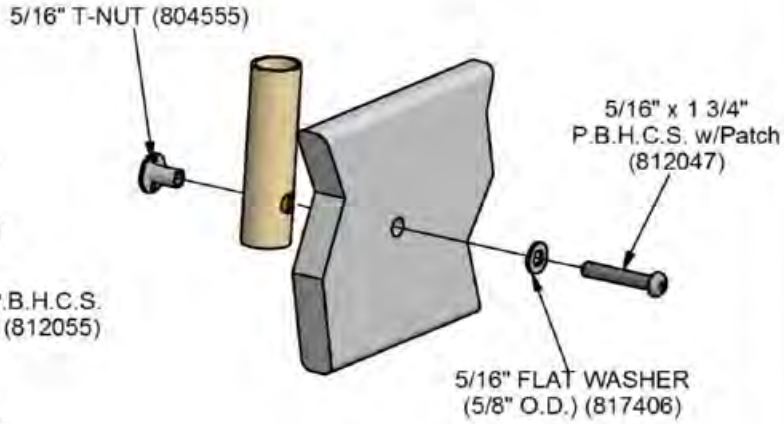

790

DETAILS -for-
91178 , 91179, 91180

*I*MPORTANT

TO REDUCE THE RISK OF CLOTHING ENTANGLEMENT IN COMPLIANCE WITH ASTM F1487, ANY BOLT END PROTRUDING MORE THAN TWO FULL THREADS BEYOND THE FACE OF THE NUT SHALL BE CUT-OFF FLUSH, FILED SMOOTH AND TREATED TO PREVENT CORROSION.

NOTE: LOCTITE (SUPPLIED BY OTHERS) SHOULD BE USED ON ALL THREADED HARDWARE.

NOTE: AFTER ASSEMBLY IS COMPLETE, PEEN TEE-NUTS AND FLATWASHERS TO MATCH RADIUS OF PIPE.

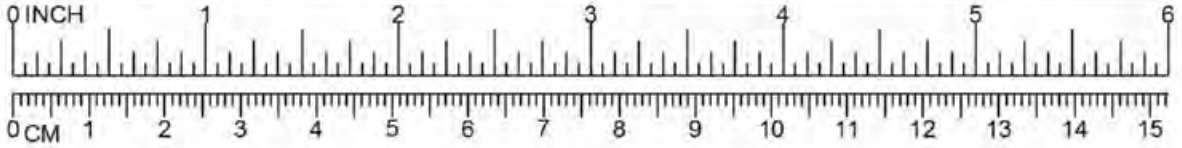

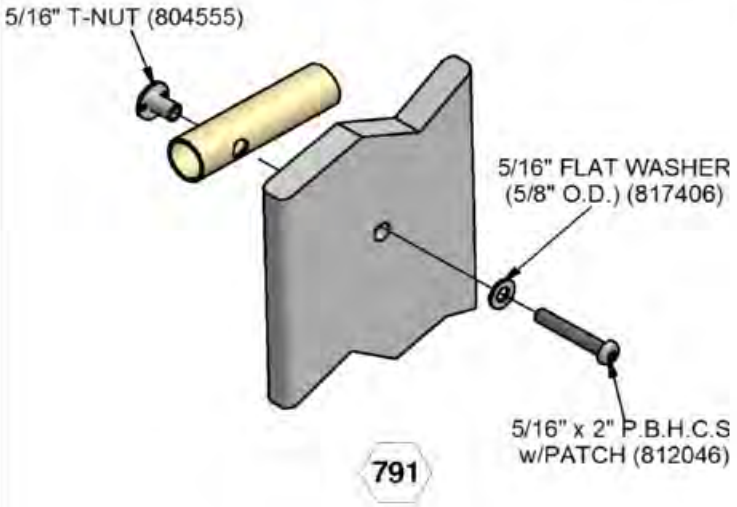

PowerScape

GameTime

A PLAYCORE Company

1-800-235-2440

ISSUED/REVISED: 4/30/19

91200

TRANSFER SYSTEM TIMBERS

1'-0" RISE	91200
2'-0" RISE	91201
2'-6' RISE	91202
3'-0" RISE	91203
4'-0" RISE	91204

⬡ = INSTALLATION DETAIL

○ = PARTS LIST REFERENCE

91200-91204
5'-0" & UNDER

91200-91204
ALL DECK HEIGHTS

INSTALLATION INSTRUCTIONS

1. Before assembling this equipment, read the enclosed INSTALLER INSTRUCTIONS in the installation booklet; follow all the instructions during installation.
2. Assemble parts as shown in the ASSEMBLY DRAWING. Refer to the assembly details for the specific hardware required in each connection.

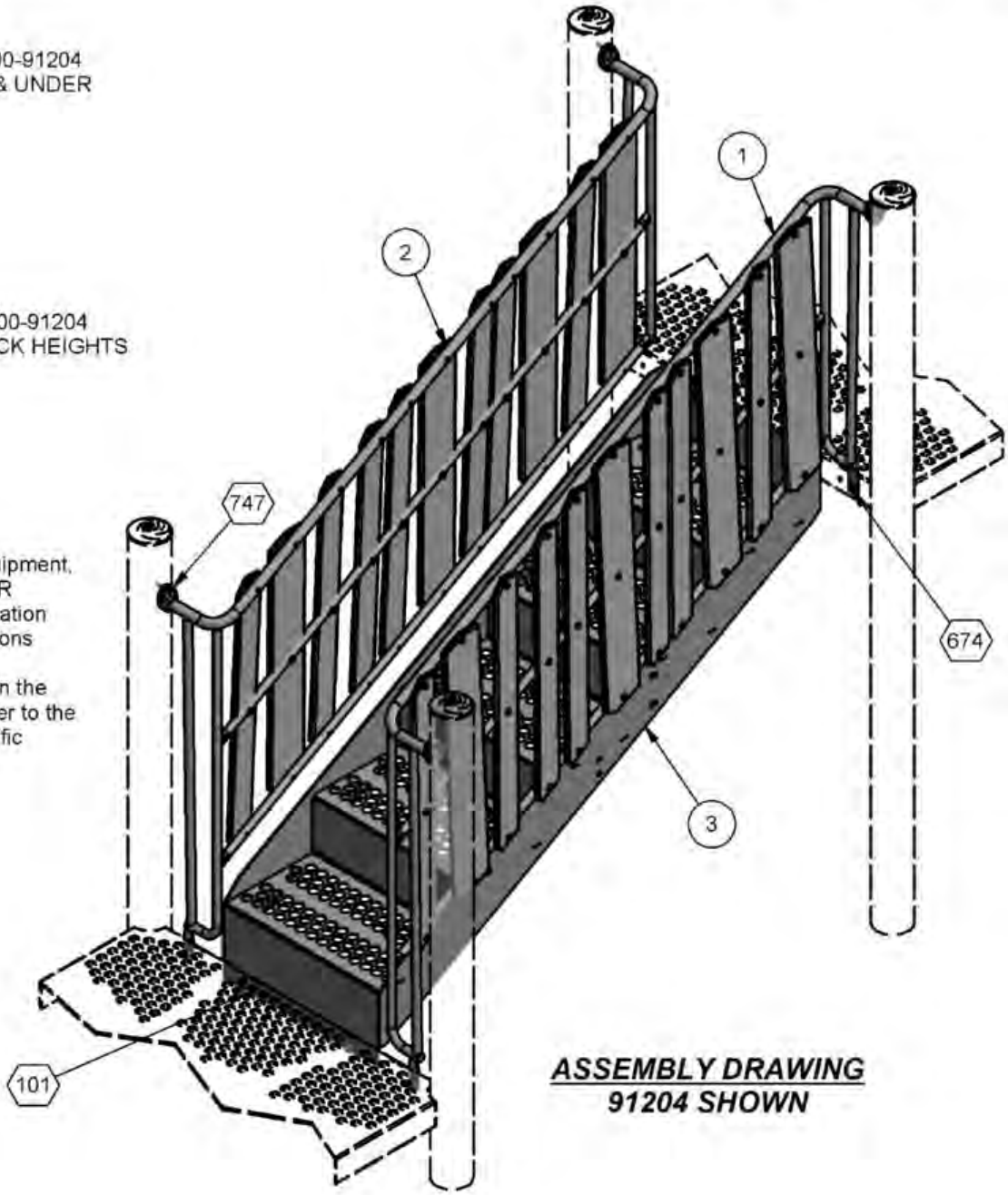

ASSEMBLY DRAWING
91204 SHOWN

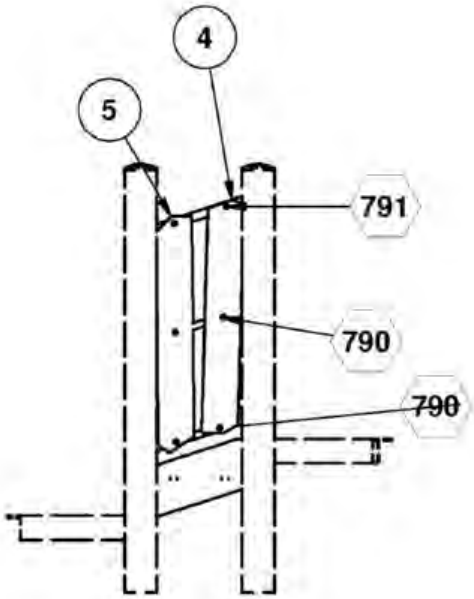

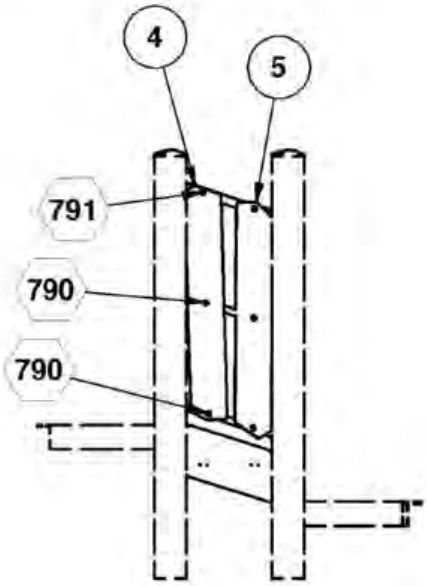

RIGHT

TIMBER PACKAGE 207448		
REF	DESCRIPTION	PART NUMBER
4	TIMBER 31 (SAND)	207272
5	TIMBER 32 (TUDOR BROWN)	207273

LEFT

TIMBER LOCATION
91200 SHOWN

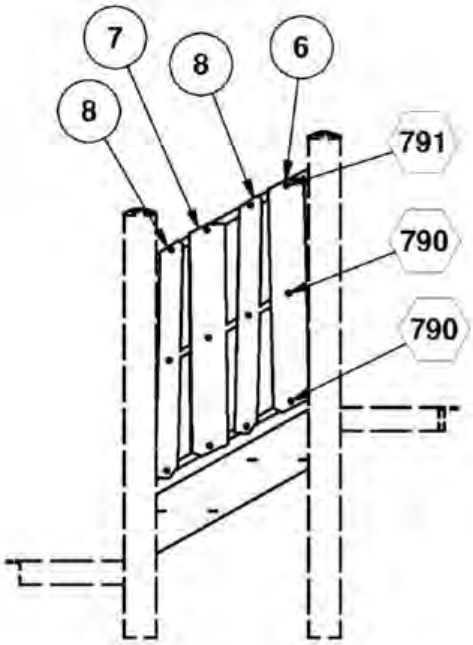

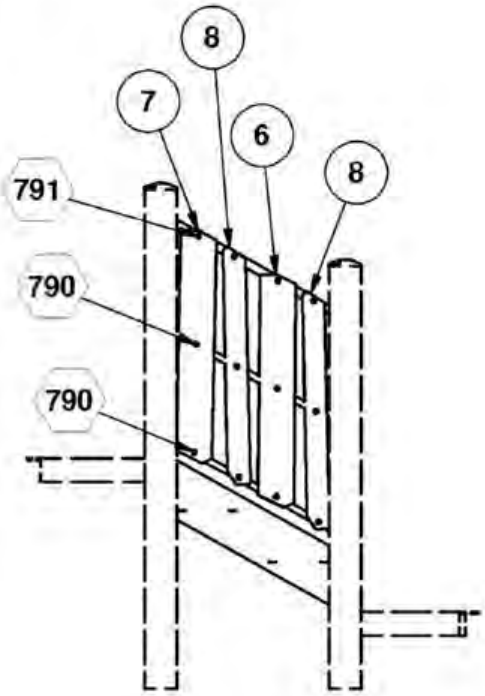

RIGHT

TIMBER PACKAGE 207449		
REF	DESCRIPTION	PART NUMBER
6	TIMBER 33 (SAND)	207282
7	TIMBER 34 (TUDOR BROWN)	207283
8	TIMBER 35 (GRAY)	207284

LEFT

TIMBER LOCATION
91201 SHOWN

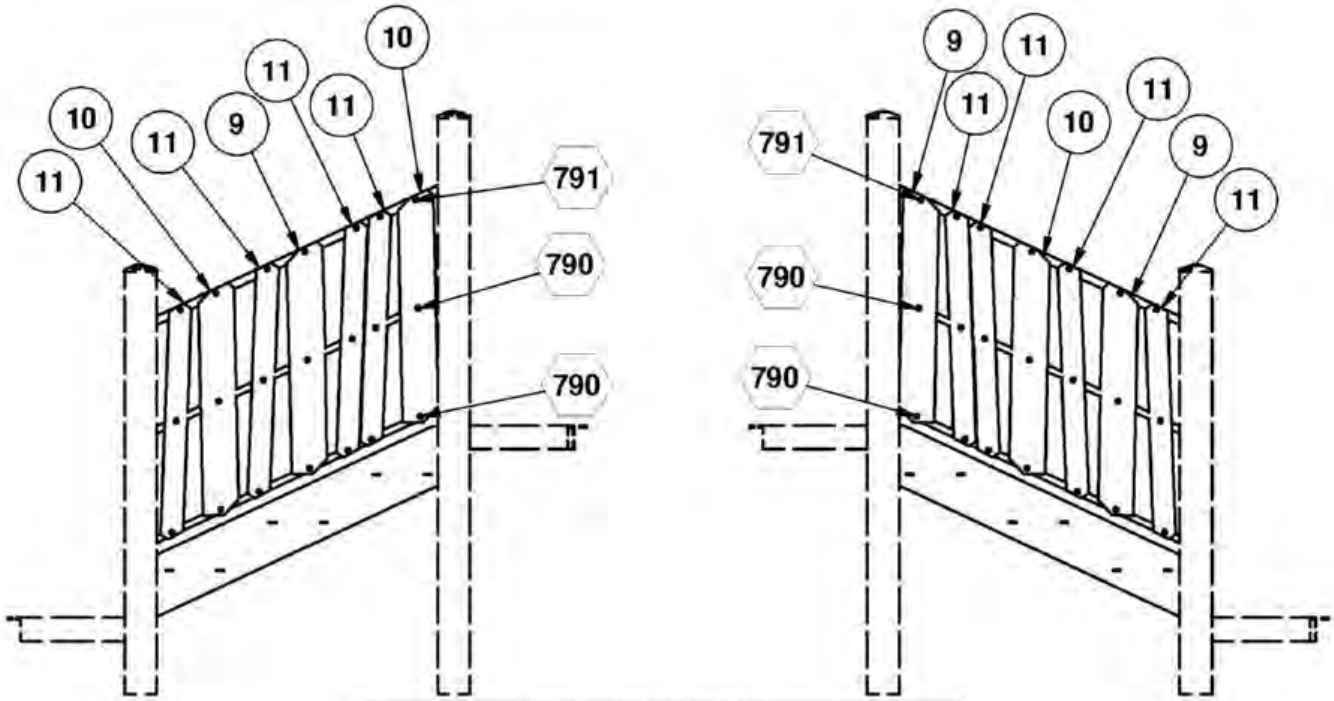

RIGHT

LEFT

TIMBER PACKAGE 207450		
REF	DESCRIPTION	PART NUMBER
9	TIMBER 36 (SAND)	207293
10	TIMBER 37 (TUDOR BROWN)	207294
11	TIMBER 38 (GRAY)	207295

TIMBER LOCATION
91202 SHOWN

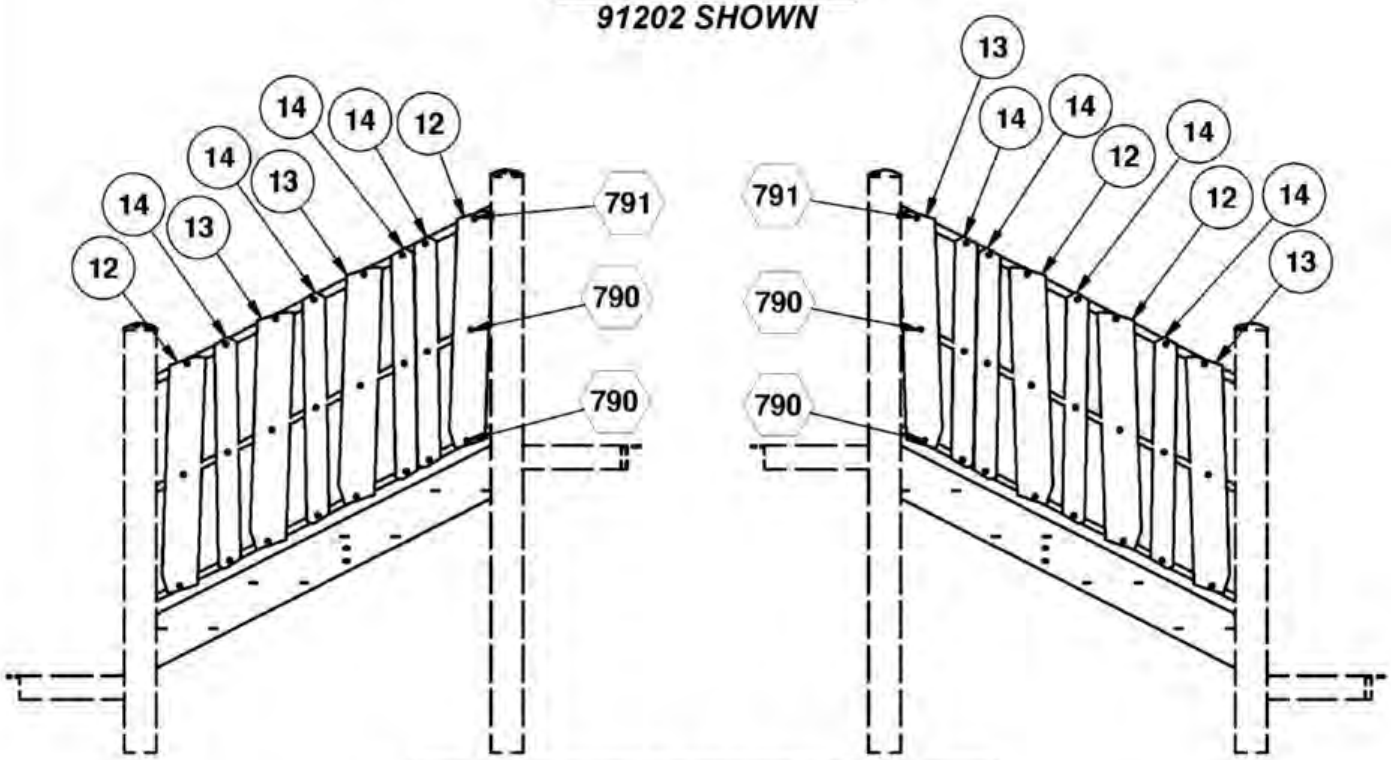

RIGHT

LEFT

TIMBER PACKAGE 207451		
REF	DESCRIPTION	PART NUMBER
12	TIMBER 39 (SAND)	207304
13	TIMBER 40 (TUDOR BROWN)	207305
14	TIMBER 41 (GRAY)	207306

TIMBER LOCATION
91203 SHOWN

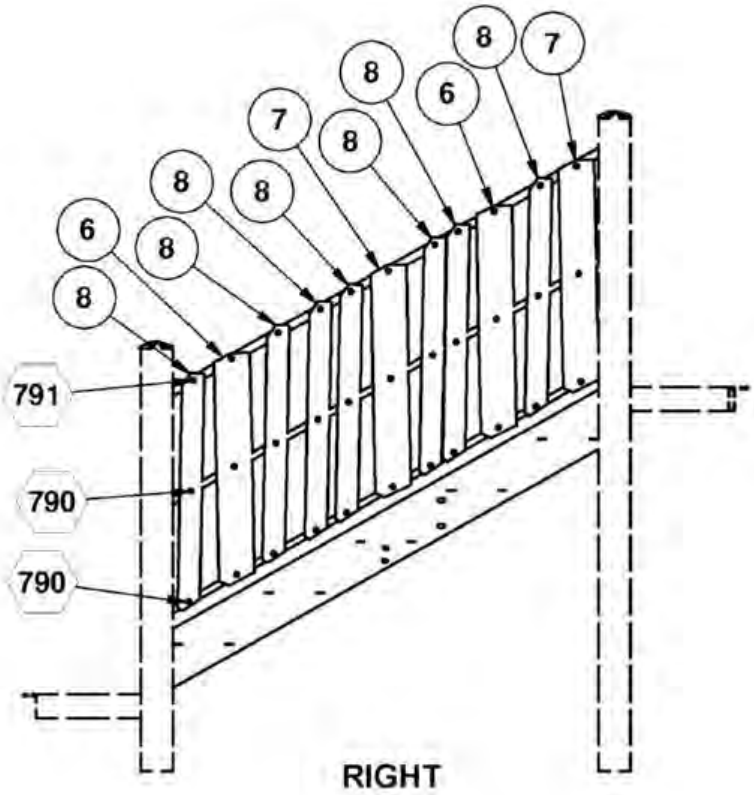

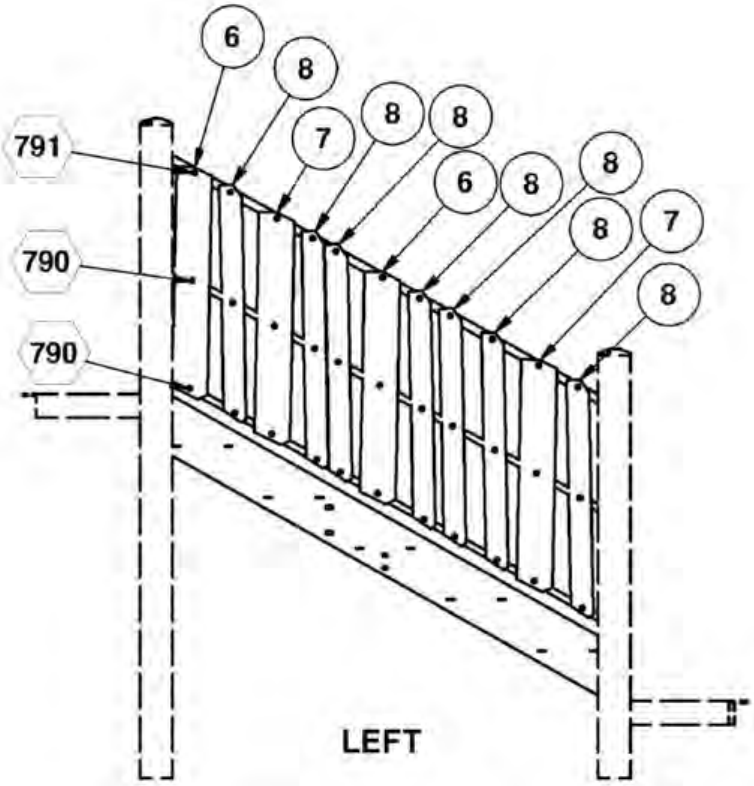

TIMBER PACKAGE 207452		
REF	DESCRIPTION	PART NUMBER
6	TIMBER 33 (SAND)	207282
7	TIMBER 34 (TUDOR BROWN)	207283
8	TIMBER 35 (GRAY)	207284

TIMBER LOCATION
91204 SHOWN

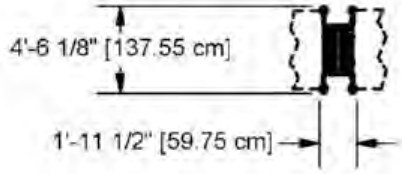

91200

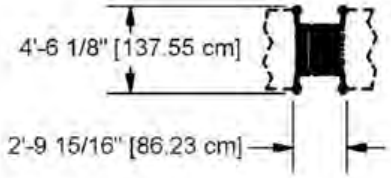

91201

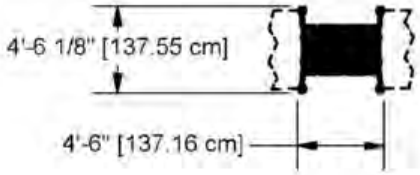

91202

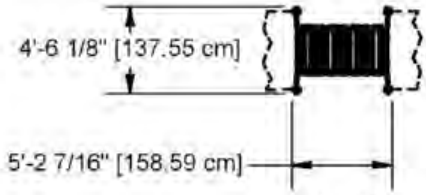

91203

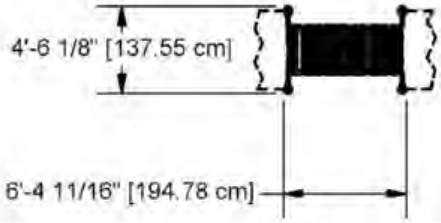

91204

TOP VIEWS

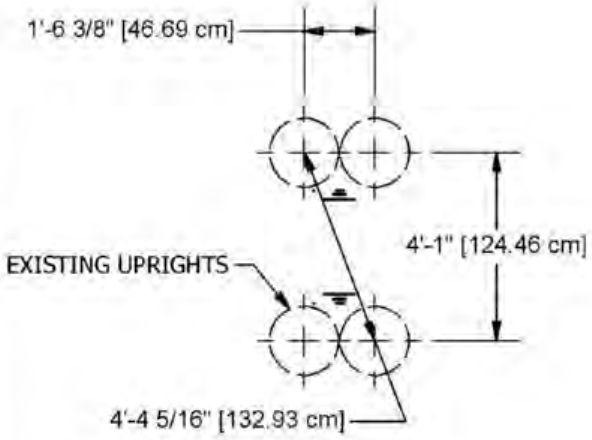

91200

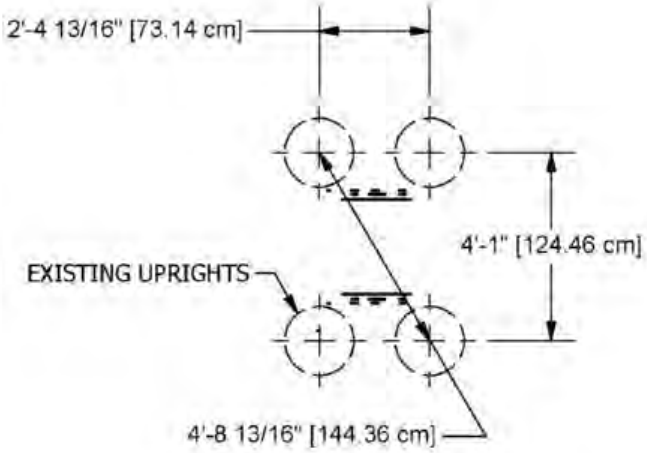

91201

GROUND PLANS

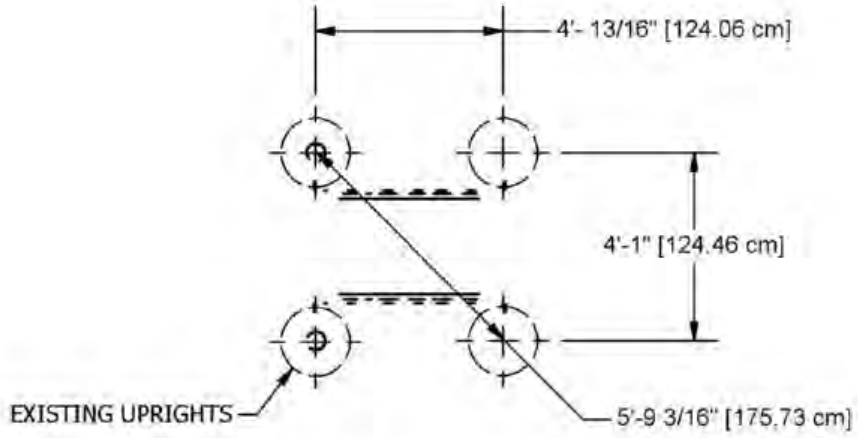

91202

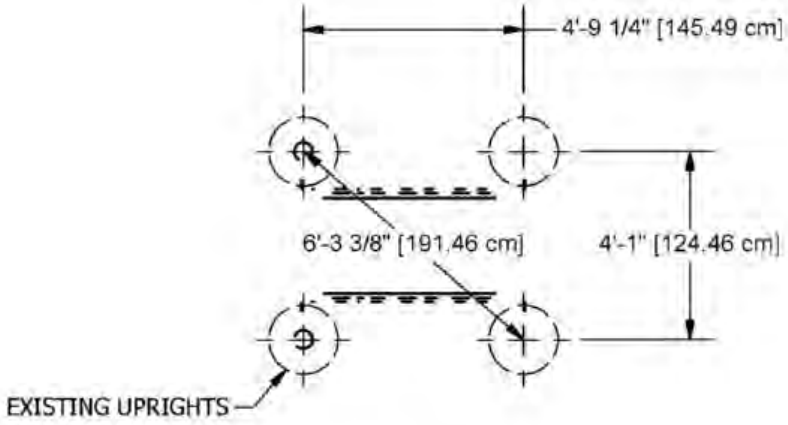

91203

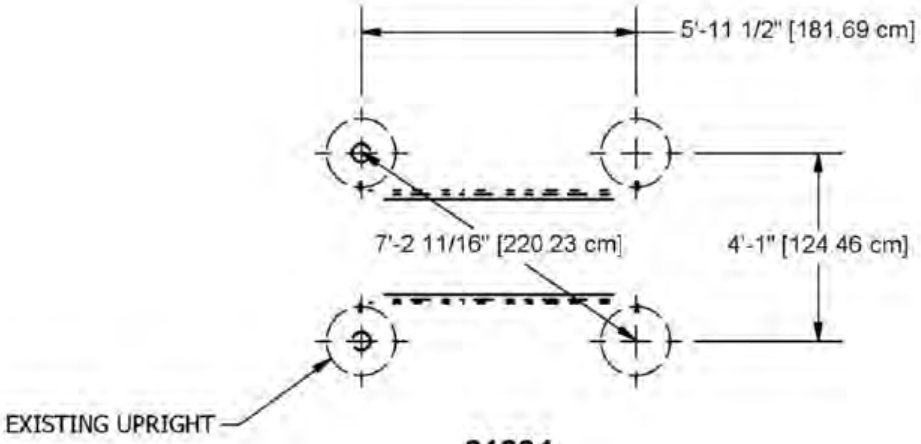

91204

GROUND PLANS

Parts List							
REF.	DESCRIPTION	91200	91201	91202	91203	91204	PART NUMBER
1	RIGHT BARRIER WELD ASSEMBLY	1	0	0	0	0	207270
1	RIGHT TIMBER BARRIER WELD ASS'Y	0	1	0	0	0	207280
1	RIGHT TIMBER BARRIER WELD ASS'Y	0	0	1	0	0	207291
1	RIGHT TIMBER BARRIER WELD ASS'Y	0	0	0	1	0	207302
1	RIGHT TIMBER BARRIER WELD ASS'Y	0	0	0	0	1	207313
2	LEFT BARRIER WELD ASSEMBLY	1	0	0	0	0	207265
2	LEFT TIMBER BARRIER WELD ASS'Y	0	1	0	0	0	207275
2	LEFT TIMBER BARRIER WELD ASS'Y	0	0	1	0	0	207286
2	LEFT TIMBER BARRIER WELD ASS'Y	0	0	0	1	0	207297
2	LEFT TIMBER BARRIER WELD ASS'Y	0	0	0	0	1	207308
3	1'-0" COATED STEPLINK	1	0	0	0	0	161235
3	2'-0" COATED ASSEMBLY	0	1	0	0	0	160670
3	2'-6" COATED ASSEMBLY	0	0	1	0	0	167494
3	3'-0" COATED ASSEMBLY	0	0	0	1	0	161371
3	4'-0" COATED ASSEMBLY	0	0	0	0	1	160667
	TIMBER PACKAGE	1	0	0	0	0	207448
4	TIMBER 31	2	0	0	0	0	207272**
5	TIMBER 32	2	0	0	0	0	207273**
	TIMBER PACKAGE	0	1	0	0	0	207449
6	TIMBER 33	0	2	0	0	0	207282**
7	TIMBER 34	0	2	0	0	0	207283**
8	TIMBER 35	0	4	0	0	0	207284**
	TIMBER PACKAGE	0	0	1	0	0	207450
9	TIMBER 36	0	0	3	0	0	207293**
10	TIMBER 37	0	0	3	0	0	207294**
11	TIMBER 38	0	0	8	0	0	207295**
	TIMBER PACKAGE	0	0	0	1	0	207451
12	TIMBER 39	0	0	0	4	0	207304**
13	TIMBER 40	0	0	0	4	0	207305**
14	TIMBER 41	0	0	0	8	0	207306**
	TIMBER PACKAGE	0	0	0	0	1	207452
6	TIMBER 33	0	0	0	0	4	207282**
7	TIMBER 34	0	0	0	0	4	207283**
8	TIMBER 35	0	0	0	0	14	207284**
	TRU-LOC	4	4	4	4	4	A03650

Unless Otherwise Specified, All Units of Measure are Each
** Included in Hardware*
*** Included in Timber Package*

Warning: During Installation, Hardware And Small Parts Are Choking Hazards For Young Children. Store Unused Parts Appropriately Until Assembly Is Completed. Once Assembly Is Completed, Remove Any Unused Parts From The Play Environment And Dispose/Save Them In A Secure Location.

Note: Peen Tee-Nuts and Flatwashers to match radius of pipe after assembly is complete.

Note: Loctite (supplied by others) should be used on any non-patch hardware.

CONTINUED ON NEXT PAGE

Parts List							
REF.	DESCRIPTION	91200	91201	91202	91203	91204	PART NUMBER
	HARDWARE COMPLETE	1	0	0	0	0	207434
	HARDWARE COMPLETE	0	1	0	0	0	207435
	HARDWARE COMPLETE	0	0	1	0	0	207436
	HARDWARE COMPLETE	0	0	0	1	0	207437
	HARDWARE COMPLETE	0	0	0	0	1	207438
	3/8" x 3/4" P.B.H.C.S. w/PATCH	8	8	8	8	8	812052*
	3/8" x 2" P.B.H.C.S. w/PATCH	4	4	4	4	4	812055*
	3/8" FLAT WASHER (1 1/4" O.D.)	8	8	8	8	8	817424*
	3/8" LOCK WASHER	12	12	12	12	12	817334*
	3/8" T-NUT	8	8	8	8	8	804556*
	ALUM. PIN	4	4	4	4	4	203568*
	5/16" T-NUT	12	24	42	48	66	804555*
	5/16" x 2" P.B.H.C.S. w/PATCH	4	8	14	16	22	812046*
	5/16" FLAT WASHER (5/8" O.D.)	12	24	42	48	66	817406*
	5/16" x 1 3/4" P.B.H.C.S. w/PATCH	8	16	28	32	44	812047*

Unless Otherwise Specified, All Units of Measure are Each
** Included in Hardware*
*** Included in Timber Package*

Warning: During Installation, Hardware And Small Parts Are Choking Hazards For Young Children. Store Unused Parts Appropriately Until Assembly Is Completed. Once Assembly Is Completed, Remove Any Unused Parts From The Play Environment And Dispose/Save Them In A Secure Location.

Note: Peen Tee-Nuts and Flatwashers to match radius of pipe after assembly is complete.

Note: Loctite (supplied by others) should be used on any non-patch hardware.

DETAILS -for-
91200, 91201, 91202, 91203 AND 91204

IMPORTANT

TO REDUCE THE RISK OF CLOTHING ENTANGLEMENT IN COMPLIANCE WITH ASTM F1487, ANY BOLT END PROTRUDING MORE THAN TWO FULL THREADS BEYOND THE FACE OF THE NUT SHALL BE CUT-OFF FLUSH, FILED SMOOTH AND TREATED TO PREVENT CORROSION.

NOTE: LOCTITE (SUPPLIED BY OTHERS) SHOULD BE USED ON ALL THREADED HARDWARE.

NOTE: AFTER ASSEMBLY IS COMPLETE, PEEN TEE-NUTS AND FLATWASHERS TO MATCH RADIUS OF PIPE.

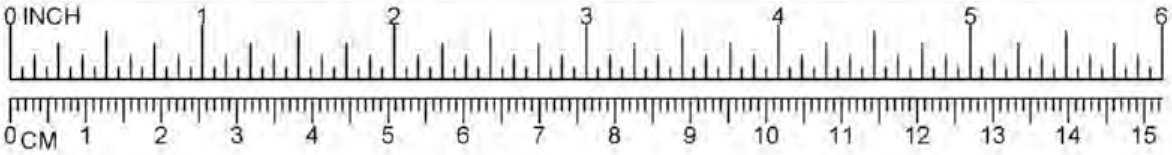

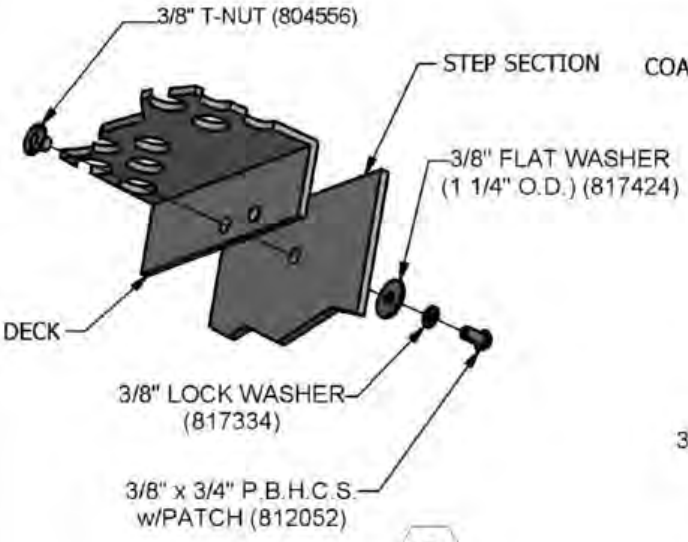

101

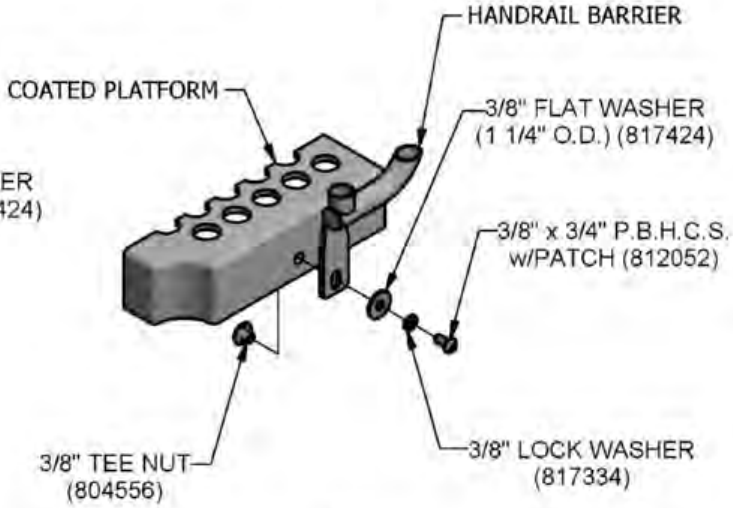

674

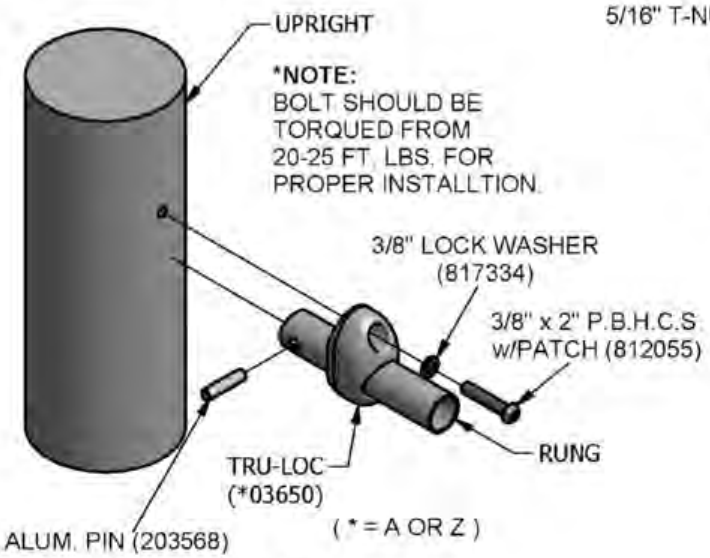

747

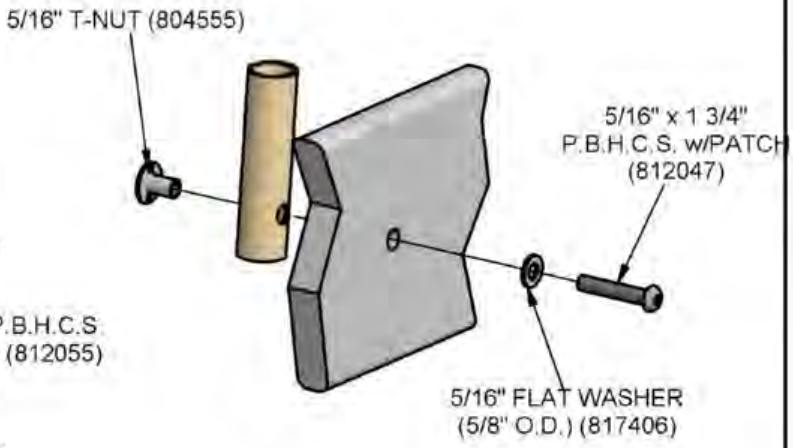

790

DETAILS -for-
91200, 91201, 91202, 91203 AND 91204

IMPORTANT

TO REDUCE THE RISK OF CLOTHING ENTANGLEMENT IN COMPLIANCE WITH ASTM F1487, ANY BOLT END PROTRUDING MORE THAN TWO FULL THREADS BEYOND THE FACE OF THE NUT SHALL BE CUT-OFF FLUSH, FILED SMOOTH AND TREATED TO PREVENT CORROSION.

NOTE: LOCTITE (SUPPLIED BY OTHERS) SHOULD BE USED ON ALL THREADED HARDWARE.

NOTE: AFTER ASSEMBLY IS COMPLETE, PEEN TEE-NUTS AND FLATWASHERS TO MATCH RADIUS OF PIPE.

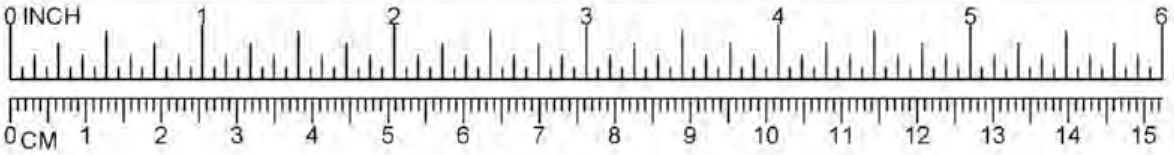

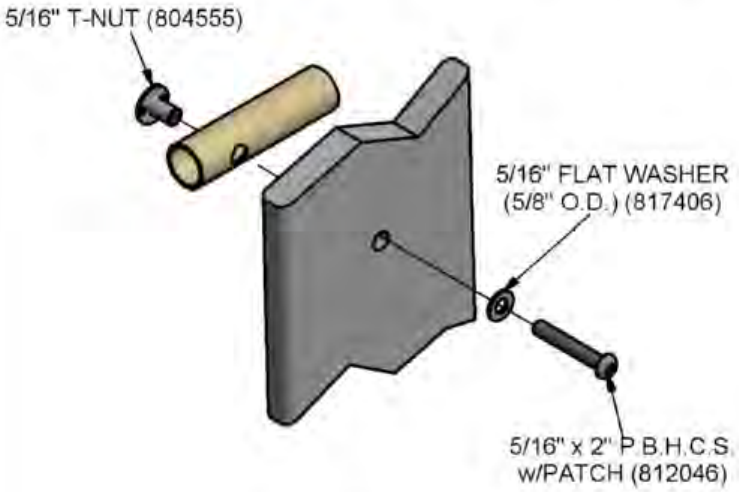

791

PowerScape

GameTime

A PLAYCORE Company

1-800-235-2440

ISSUED/REVISED: 05/30/17

91223 PLANK CLIMBER

3'-0"	91223
4'-0"	91181
5'-0"	91182
6'-0"	91183
7'-0"	91184
8'-0"	91185

⬡ = INSTALLATION DETAIL

○ = PARTS LIST REFERENCE

91223 3'-0"
91181 4'-0"

ALL DECK HEIGHTS

INSTALLATION INSTRUCTIONS

1. Before assembling this equipment, read the enclosed INSTALLATION INSTRUCTIONS in the installation booklet; follow all the instructions during installation.
2. Assemble parts as shown in the ASSEMBLY DRAWING. Refer to the assembly details for the specific hardware required in each connection.

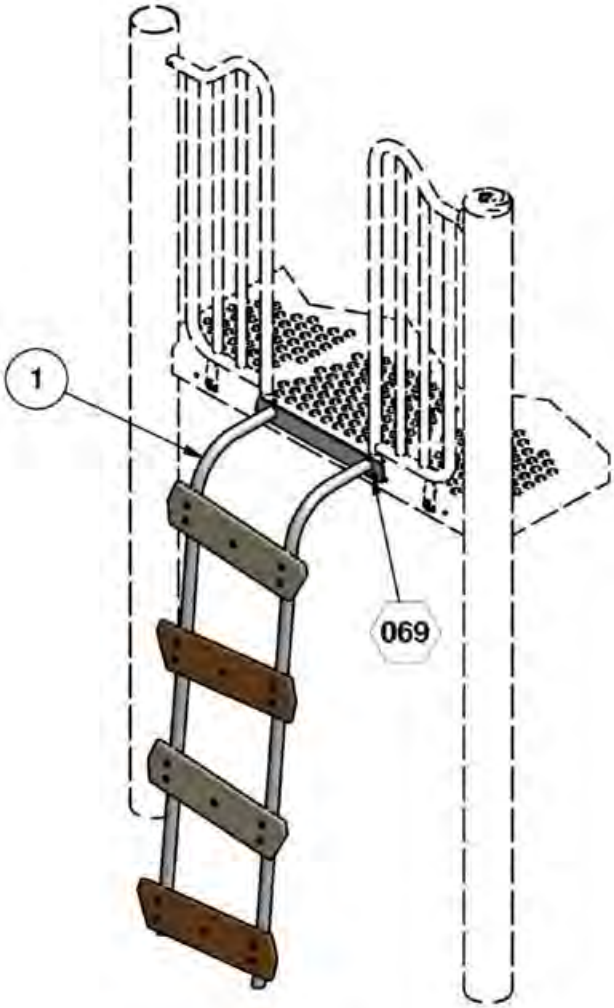

ASSEMBLY VIEW
91182 SHOWN

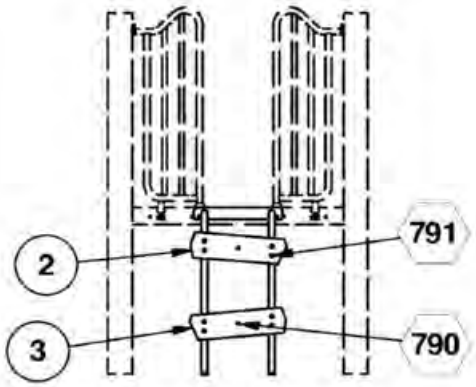

TIMBER LOCATION
91223

TIMBER PACKAGE 207490		
REF.	DESCRIPTION	PART NUMBER
2	TIMBER 42 (SAND)	207321
3	TIMBER 43 (TUDOR BROWN)	207322

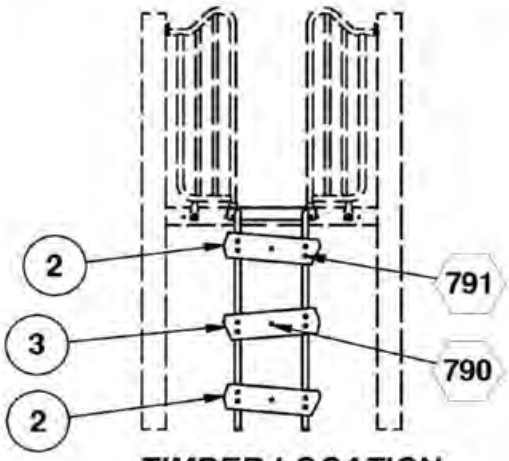

TIMBER LOCATION
91181

TIMBER PACKAGE 207491		
REF.	DESCRIPTION	PART NUMBER
2	TIMBER 42 (SAND)	207321
3	TIMBER 43 (TUDOR BROWN)	207322

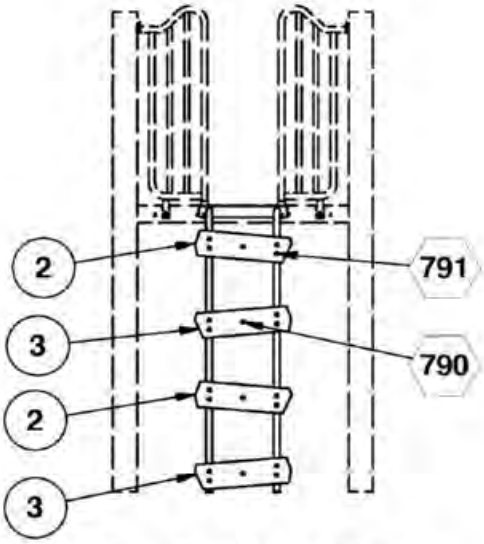

TIMBER LOCATION
91182

TIMBER PACKAGE 207492		
REF.	DESCRIPTION	PART NUMBER
2	TIMBER 42 (SAND)	207321
3	TIMBER 43 (TUDOR BROWN)	207322

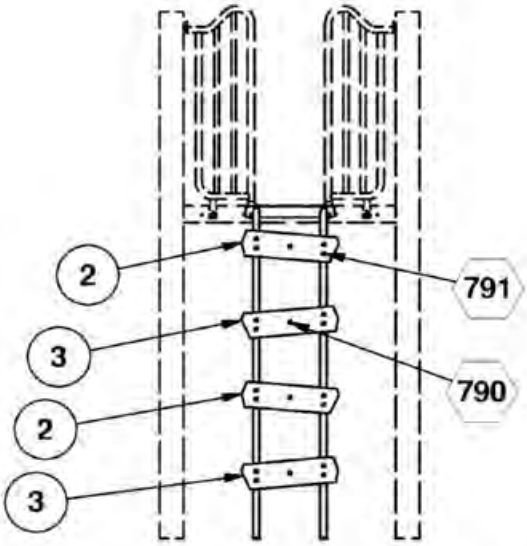

TIMBER LOCATION
91183

TIMBER PACKAGE 207492		
REF.	DESCRIPTION	PART NUMBER
2	TIMBER 42 (SAND)	207321
3	TIMBER 43 (TUDOR BROWN)	207322

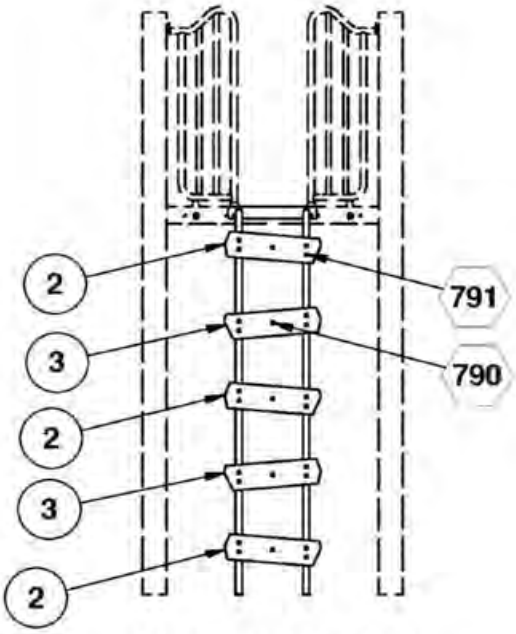

TIMBER LOCATION
91184

TIMBER PACKAGE 207493		
REF.	DESCRIPTION	PART NUMBER
2	TIMBER 42 (SAND)	207321
3	TIMBER 43 (TUDOR BROWN)	207322

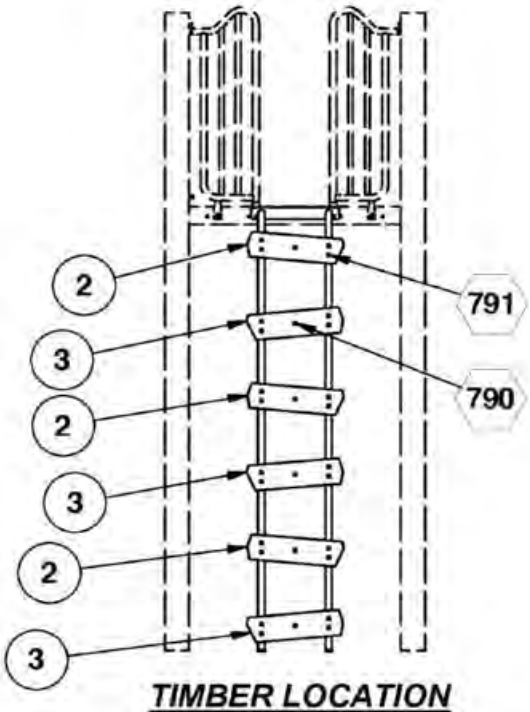

TIMBER LOCATION
91185

TIMBER PACKAGE 207494		
REF.	DESCRIPTION	PART NUMBER
2	TIMBER 42 (SAND)	207321
3	TIMBER 43 (TUDOR BROWN)	207322

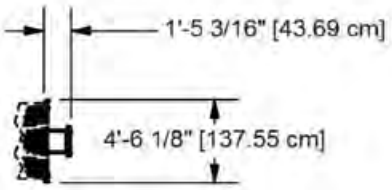

91223 3'-0"

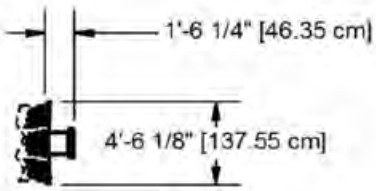

91181 4'-0"

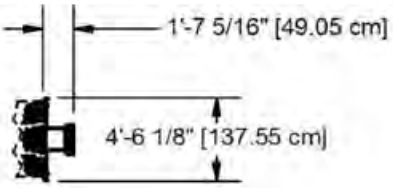

91182 5'-0"

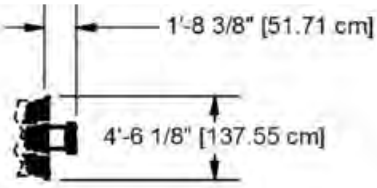

91183 6'-0"

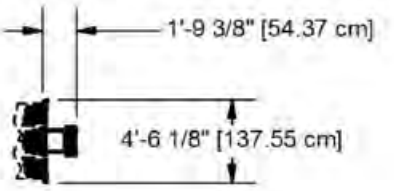

91184 7'-0"

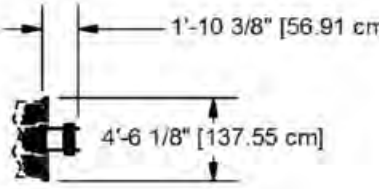

91185 8'-0"

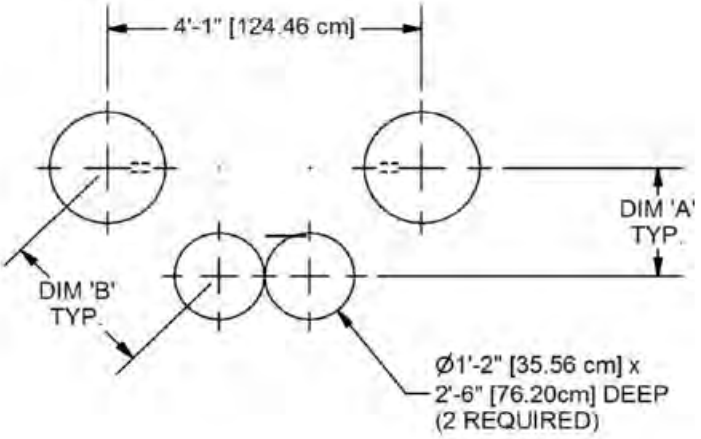

Table			
PART NUMBER	DECK HEIGHT	DIM 'A'	DIM 'B'
91223	3'-0"	1'-3 13/16" [40.15cm]	1'-10 3/4" [57.72cm]
91181	4'-0"	1'-4 7/8" [42.82cm]	1'-11 1/2" [59.67cm]
91182	5'-0"	1'-5 15/16" [45.48cm]	2'-1/8" [61.28cm]
91183	6'-0"	1'-6 15/16" [48.15cm]	2'-15/16" [63.37cm]
91184	7'-0"	1'-8" [50.82cm]	2'-1 11/16" [65.29cm]
91185	8'-0"	1'-9 1/16" [53.48cm]	2'-2 7/16" [67.17cm]

NOTE: HOLE DEPTHS INDICATED ON ALL GROUND PLANS ARE MEASURED FROM THE FINISHED SURFACE. SEE DETAIL 032. ALL FOOTING DIMENSIONS ARE BASED ON LEVEL FINISHED SURFACE.

GROUND PLAN

CONCRETE REQUIRED:
.12 CUBIC YARDS
[.10 CUBIC METERS]

Parts List								
REF.	DESCRIPTION	91223	91181	91182	91183	91184	91185	PART NUMBER
1	3' PLANK CLIMBER WELD ASS'Y	1	0	0	0	0	0	207377
1	4' PLANK CLIMBER WELD ASS'Y	0	1	0	0	0	0	207316
1	5' PLANK CLIMBER WELD ASS'Y	0	0	1	0	0	0	207324
1	6' PLANK CLIMBER WELD ASS'Y	0	0	0	1	0	0	207328
1	7' PLANK CLIMBER WELD ASS'Y	0	0	0	0	1	0	207332
1	8' PLANK CLIMBER WELD ASS'Y	0	0	0	0	0	1	207336
	TIMBER PACKAGE	1	0	0	0	0	0	207490
	TIMBER PACKAGE	0	1	0	0	0	0	207491
	TIMBER PACKAGE	0	0	1	1	0	0	207492
	TIMBER PACKAGE	0	0	0	0	1	0	207493
	TIMBER PACKAGE	0	0	0	0	0	1	207494
2	TIMBER 42	1	2	2	2	3	3	207321**
3	TIMBER 43	1	1	2	2	2	3	207322**
	HARDWARE COMPLETE	1	0	0	0	0	0	207495
	HARDWARE COMPLETE	0	1	0	0	0	0	207496
	HARDWARE COMPLETE	0	0	1	1	0	0	207497
	HARDWARE COMPLETE	0	0	0	0	1	0	207498
	HARDWARE COMPLETE	0	0	0	0	0	1	207499
	3/8" x 3/4" P.B.H.C.S. w/PATCH	2	2	2	2	2	2	812052*
	3/8" LOCK WASHER	2	2	2	2	2	2	817334*
	3/8" T-NUT	2	2	2	2	2	2	804556*
	5/16" x 1 3/4" P.B.H.C.S. w/Patch	2	3	4	4	5	6	812047*
	5/16" x 2" P.B.H.C.S. w/PATCH	8	12	16	16	20	24	812046*
	5/16" FLAT WASHER (5/8" O.D.)	10	15	20	20	25	30	817406*
	5/16" T-NUT	10	15	20	20	25	30	804555*

Unless Otherwise Specified, All Units of Measure are Each
** Included in Hardware*
*** Included in Timber Package*

Warning: During Installation, Hardware And Small Parts Are Choking Hazards For Young Children. Store Unused Parts Appropriately Until Assembly Is Completed. Once Assembly Is Completed, Remove Any Unused Parts From The Play Environment And Dispose/Save Them In A Secure Location.
Note: Peen Tee-Nuts and Flatwashers to match radius of pipe after assembly is complete.
Note: Loctite (supplied by others) should be used on any non-patch hardware.

DETAILS -for-
91223, 91181, 91182, 91183, 91184, 91185

IMPORTANT

TO REDUCE THE RISK OF CLOTHING ENTANGLEMENT IN COMPLIANCE WITH ASTM F1487, ANY BOLT END PROTRUDING MORE THAN TWO FULL THREADS BEYOND THE FACE OF THE NUT SHALL BE CUT-OFF FLUSH, FILED SMOOTH AND TREATED TO PREVENT CORROSION.

NOTE: LOCTITE (SUPPLIED BY OTHERS) SHOULD BE USED ON ALL THREADED HARDWARE.

NOTE: AFTER ASSEMBLY IS COMPLETE, PEEN TEE-NUTS AND FLATWASHERS TO MATCH RADIUS OF PIPE.

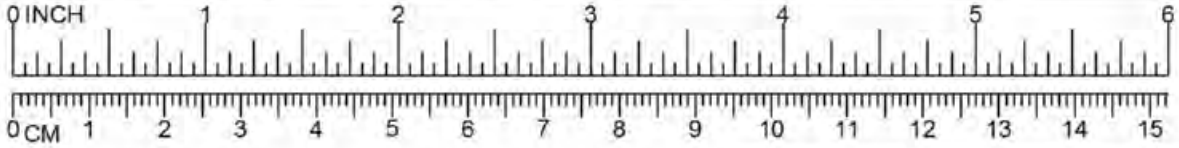

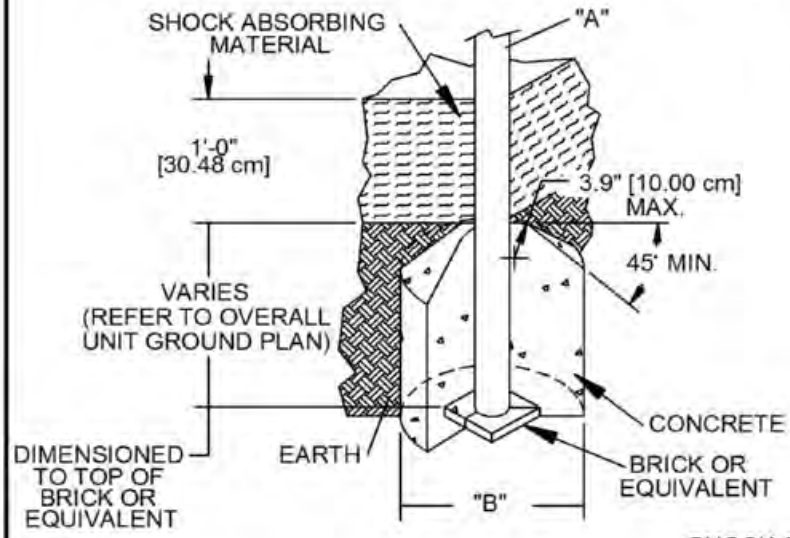

DIA. "A" (PIPE SIZE)	DIA. "B" (FOOTING SIZE)
1 1/16" [2.70 cm]	1'-2" [35.56 cm]
1 5/16" [3.33 cm]	1'-2" [35.56 cm]
1 5/8" [4.13 cm]	1'-2" [35.56 cm]
1 7/8" [4.83 cm]	1'-2" [35.56 cm]
2 3/8" [6.03 cm]	1'-2" [35.56 cm]
3 1/2" [8.89 cm]	1'-6" [45.72 cm]
5" [12.70 cm]	1'-6" [45.72cm]
TRACK RIDE & SWINGS	
5" [12.70 cm]	2'-0" [60.96 cm]
TREE SCAPE	
5" [12.70 cm]	4'-0" [121.92 cm]

NOTES:
- SLOPED FOOTING IS A REQUIREMENT OF EUROPEAN STANDARD EN1176-1 ONLY
- SUGGESTED MINIMUM CONCRETE RATING: 3000 PSI

032

SHOCK ABSORBING PROPERTIES OF SURFACING MATERIALS VARY. IF YOU DETERMINE THAT LESS THAN 1'-0" [30.48cm] OF SURFACING IS REQUIRED, MAKE UP THE DIFFERENCE IN ELEVATION WITH EARTH, BEFORE APPLYING SURFACING.

LEG (PIPE DIA.)	BOLT REQUIRED
1 5/16" [3.3 cm]	3/8" x 2" HEX HEAD (801007)
1 5/8" [4.1 cm]	3/8" x 2 1/2" HEX HEAD (801009)
1 7/8" [4.7 cm]	3/8" x 3" HEX HEAD (801011)
2 3/8" [6.0 cm]	3/8" x 3 1/2" HEX HEAD (801013)
2 7/8" [7.3 cm]	3/8" x 4" HEX HEAD (801015)

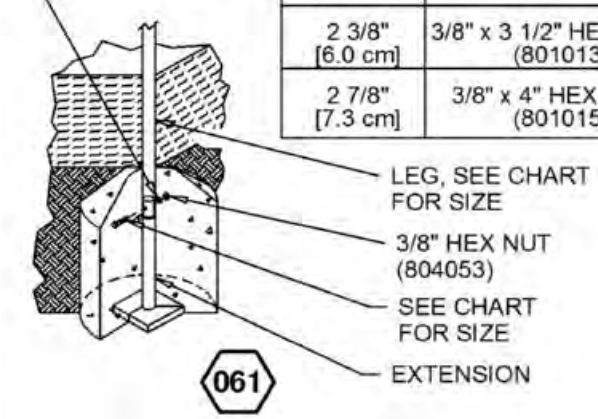

061

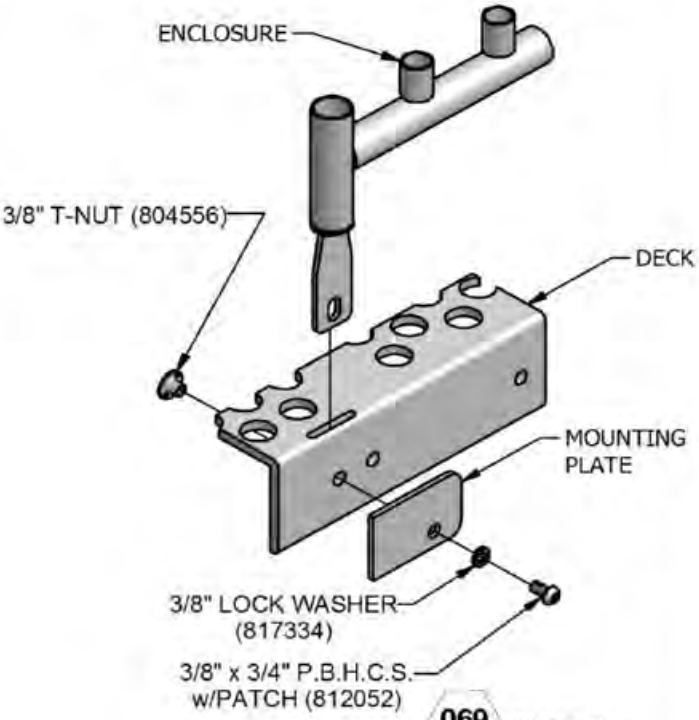

069

DETAILS -for-
91223, 91181, 91182, 91183, 91184 & 91185

Important

To Reduce the Risk of Clothing Entanglement in Compliance with ASTM F1487, Any Bolt End Protruding More Than Two Full Threads Beyond the Face of the Nut Shall Be Cut-Off Flush, Filed Smooth and Treated to Prevent Corrosion.

Note: Loctite (Supplied by Others) Should be Used on All Threaded Hardware.

Note: After Assembly is Complete, Peen Tee-Nuts and Flatwashers to Match Radius of Pipe.

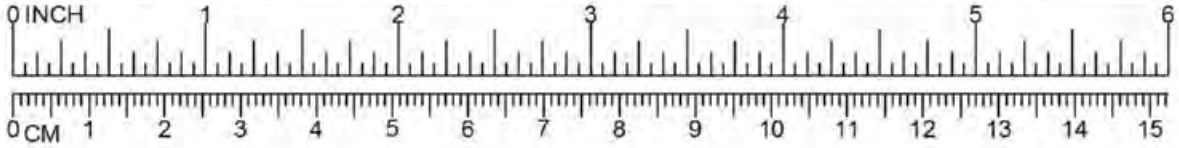

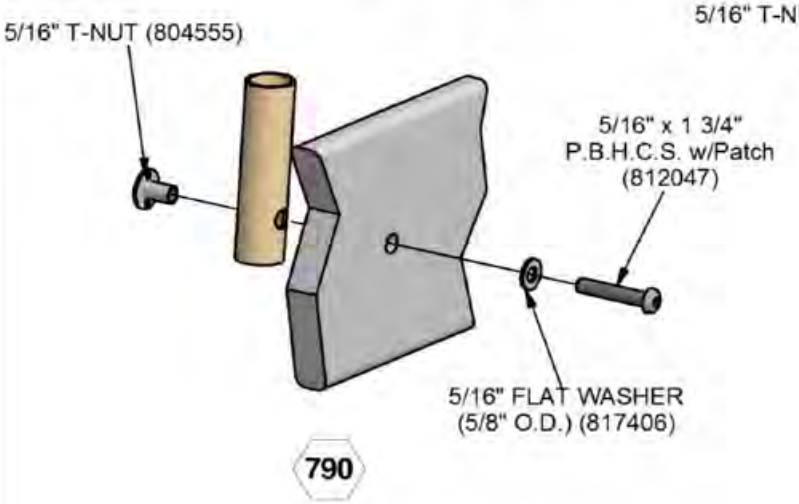

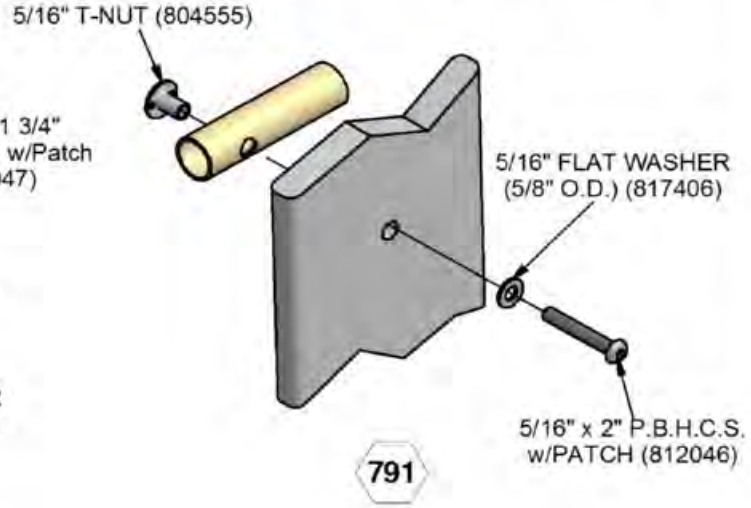

PowerScape

GameTime

A PLAYCORE Company

1-800-235-2440

ISSUED/REVISED: 5/25/17

91336 TIMBERS ENCLOSURE

= INSTALLATION DETAIL

= PARTS LIST REFERENCE

w/ MOLDED STEERING WHEEL (ABOVE DECK)	91336
w/ MOLDED STEERING WHEEL (BELOW DECK)	91337
w/ SOLID STEERING WHEEL (ABOVE DECK)	91338
w/ SOLID STEERING WHEEL (BELOW DECK)	91339
w/ THUNDERRING (ABOVE DECK)	91340
w/ THUNDERRING (BELOW DECK)	91341

This play equipment is designed for CHILDREN 2 TO 5 YEARS OLD. Adult supervision is recommended

91336, 91338 & 91340
UP TO 5'-0"
91337, 91339 & 91341
4'-0" TO 5'-0"

This play equipment is designed for CHILDREN 5 TO 12 YEARS OLD. Adult supervision is recommended

91336, 91338 & 91340
ALL DECKS
91337, 91339 & 91341
4'-0" TO 8'-0"

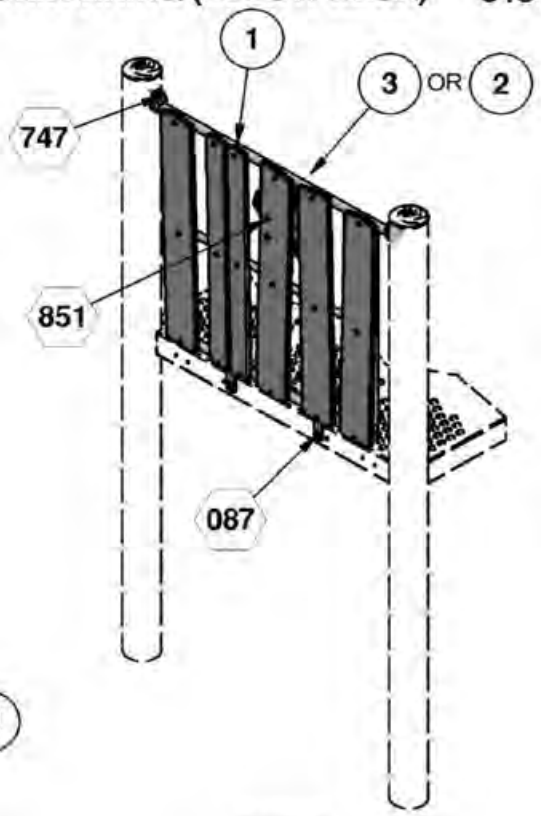

91340

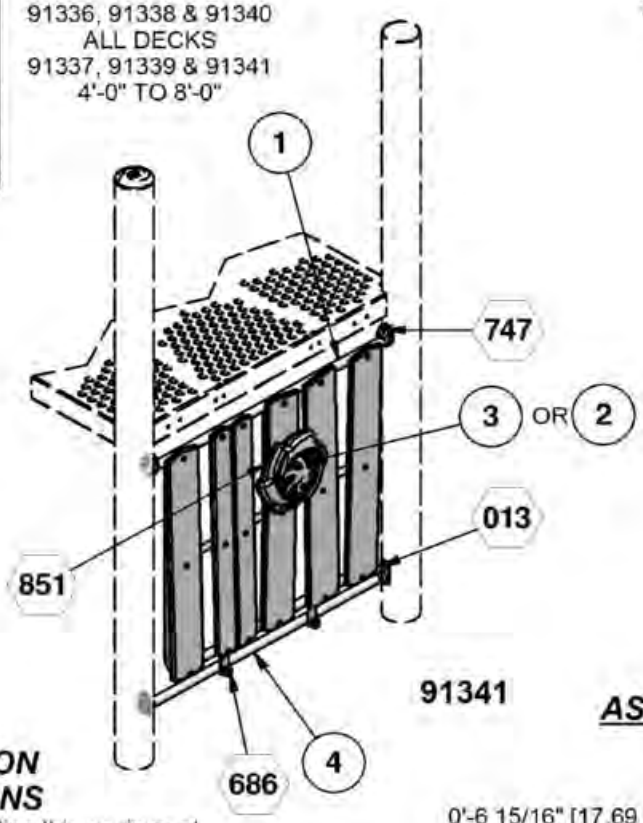

91341

ASSEMBLY DRAWINGS

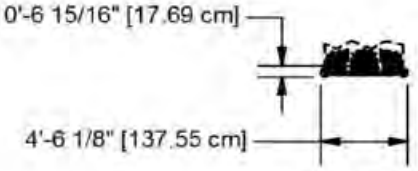

TOP VIEW

INSTALLATION INSTRUCTIONS

1. Before assembling this equipment, read the enclosed INSTALLER INSTRUCTIONS in the installaion booklet; follow all the instructions during installaion.
2. Assemble parts as shown in the ASSEMBLY DRAWING. Refer to the assembly details for the specific hardware required in each connection.

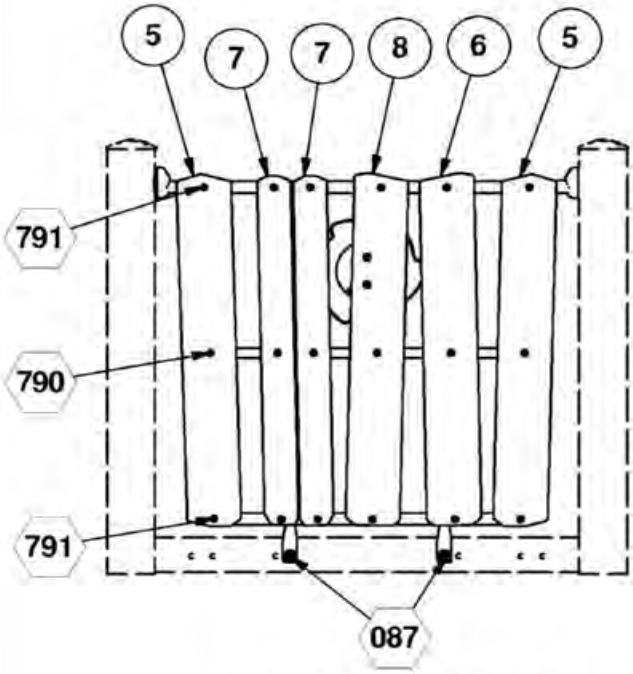

TIMBER PACKAGE -		
REF	DESCRIPTION	PART NUMBER
5	TIMBER 14 (TUDOR BROWN)	207222
6	TIMBER 16 (TUDOR BROWN)	207220
7	TIMBER 17 (GRAY)	207223
8	TIMBER 123 (SAND)	211304

TIMBER LOCATION
91340 (91336 &91338 SIMILAR)

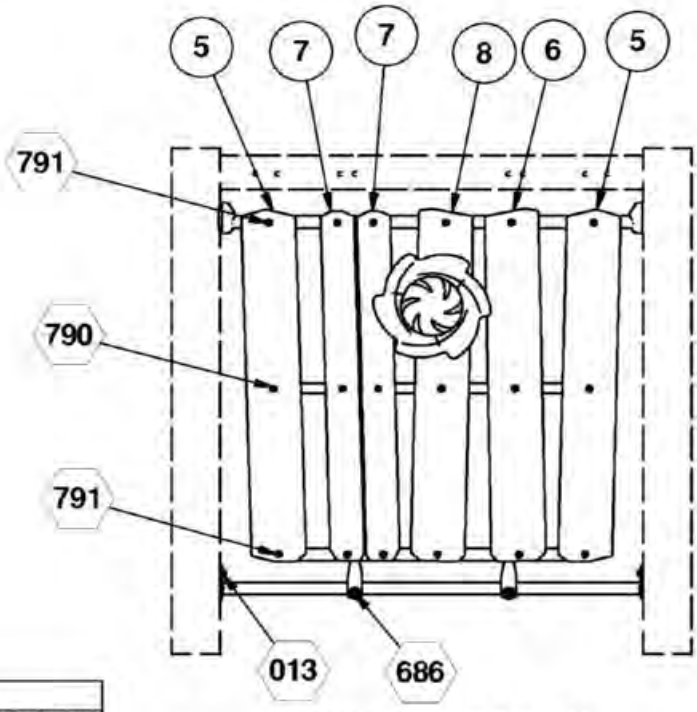

TIMBER PACKAGE -211314		
REF	DESCRIPTION	PART NUMBER
5	TIMBVER 14 (TUDOR BROWN)	207222
6	TIMBER 16 (TUDOR BROWN)	207220
7	TIMBER 17 (GRAY)	207223
8	TIMBER 123 (SAND)	211304

TIMBER LOCATION
91341 (91337 &91339 SIMILAR)

Parts List								
REF.	DESCRIPTION	91336	91337	91338	91339	91340	91341	PART NUMBER
1	TIMBER ENCLOSURE WELD ASS'Y	1	1	1	1	1	1	211306
2	STEERING WHEEL ASSEMBLY	1	1	0	0	0	0	163235
2	SOLID STEERING WHEEL ASSEMBLY	0	0	1	1	0	0	141129
3	THUNDER RING	0	0	0	0	1	1	179013
4	MOUNTING PIPE	0	1	0	1	0	1	203900
	TIMBER PACKAGE	1	1	1	1	1	1	213114
5	TIMBER 14	2	2	2	2	2	2	207222**
6	TIMBER 16	1	1	1	1	1	1	207220**
7	TIMBER 17	2	2	2	2	2	2	207223**
8	TIMBER 123	1	1	1	1	1	1	211304**
	TRU-LOC	2	2	2	2	2	2	203650
	HARDWARE COMPLETE	1	0	1	0	1	0	211316
	HARDWARE COMPLETE	0	1	0	1	0	1	211317
	5/16" x 1 3/4" P.B.H.C.S. w/Patch	6	6	6	6	6	6	812047*
	5/16" x 2" P.B.H.C.S. w/PATCH	12	12	12	12	12	12	812046*
	5/16" FLAT WASHER (5/8" O.D.)	18	18	18	18	18	18	817406*
	5/16" T-NUT	18	18	18	18	18	18	804555*
	3/8" x 3/4" P.B.H.C.S. w/PATCH	2	2	2	2	2	2	812052*
	3/8" x 1 3/4" P.B.H.C.S. w/PATCH	2	2	2	2	2	2	812054*
	3/8" x 2" P.B.H.C.S. w/PATCH	2	2	2	2	2	2	812055*
	3/8" ACORN NUT	2	2	2	2	2	2	804002*
	3/8" FLAT WASHER	2	2	2	2	2	2	817410*
	3/8" FLAT WASHER (1 1/4" O.D.)	2	2	2	2	2	2	817424*
	3/8" LOCK WASHER	6	8	6	8	6	8	817334*
	3/8" T-NUT	2	2	2	2	2	2	804556*
	ALUM. PIN	2	2	2	2	2	2	203568*

Unless Otherwise Specified, All Units of Measure are Each
** Included in Hardware*
***Included in Timber Package*

Warning: During Installation, Hardware And Small Parts Are Choking Hazards For Young Children. Store Unused Parts Appropriately Until Assembly Is Completed. Once Assembly Is Completed, Remove Any Unused Parts From The Play Environment And Dispose/Save Them In A Secure Location.

Note: Peen Tee-Nuts and Flatwashers to match radius of pipe after assembly is complete.

Note: Loctite (supplied by others) should be used on any non-patch hardware.

DETAILS -for-
91336, 91337, 91338, 91339, 91340 & 91341

Important

To Reduce the Risk of Clothing Entanglement in Compliance with ASTM F1487, Any Bolt End Protruding More Than Two Full Threads Beyond the Face of the Nut Shall Be Cut-Off Flush, Filed Smooth and Treated to Prevent Corrosion.

Note: Loctite (Supplied by Others) Should be Used on All Threaded Hardware.

Note: After Assembly is Complete, Peen Tee-Nuts and Flatwashers to Match Radius of Pipe.

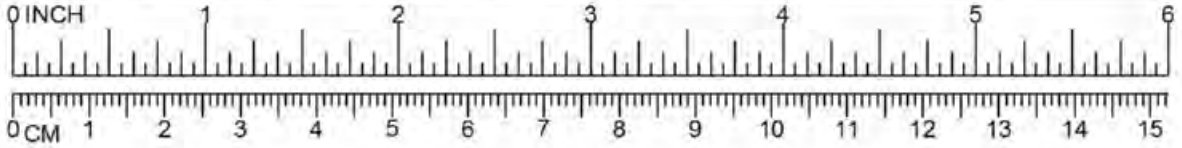

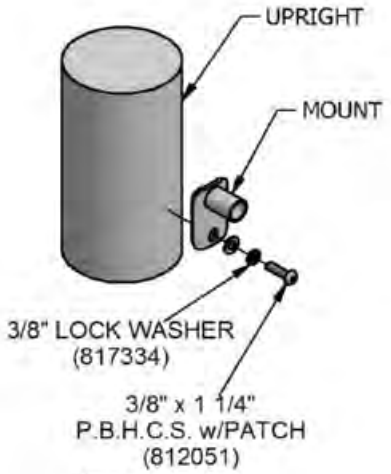

013

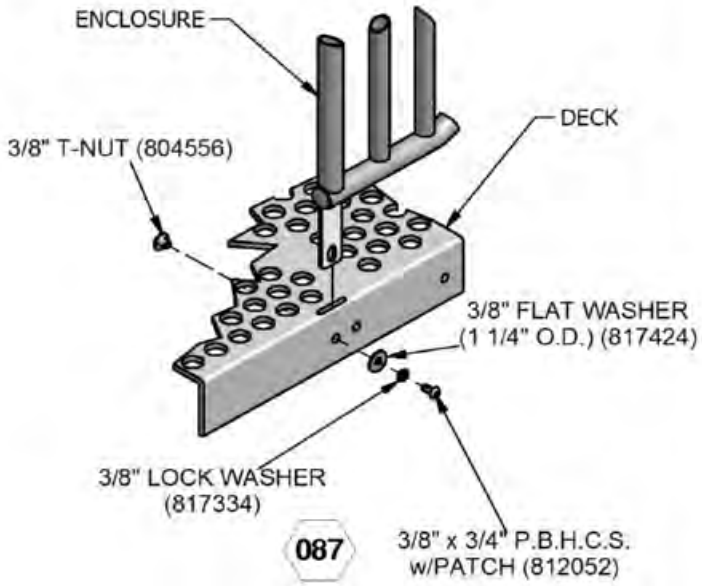

087

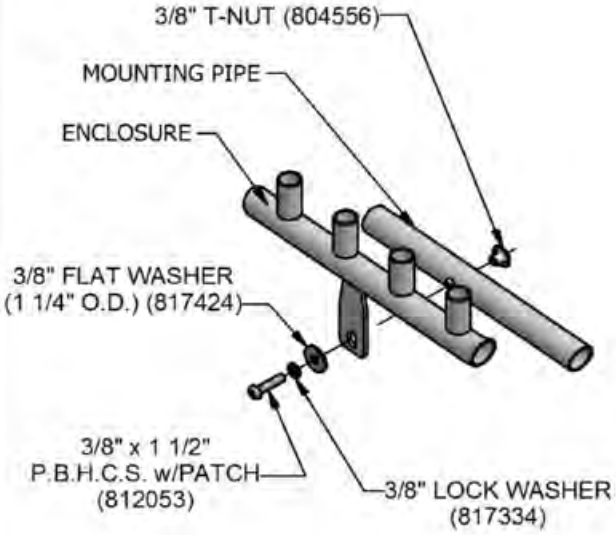

686

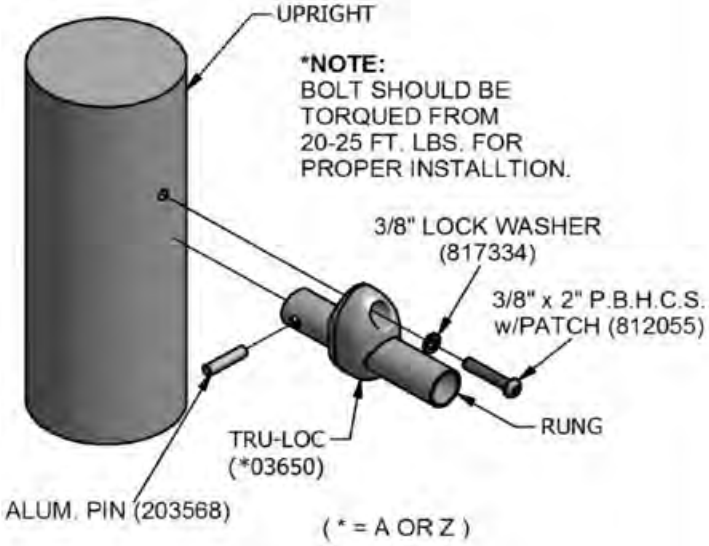

747

DETAILS -for-
91336, 91337, 91338, 91339, 91340 & 91341

Important

To Reduce the Risk of Clothing Entanglement in Compliance with ASTM F1487, Any Bolt End Protruding More Than Two Full Threads Beyond the Face of the Nut Shall Be Cut-Off Flush, Filed Smooth and Treated to Prevent Corrosion.

Note: Loctite (Supplied by Others) Should be Used on All Threaded Hardware.

Note: After Assembly is Complete, Peen Tee-Nuts and Flatwashers to Match Radius of Pipe.

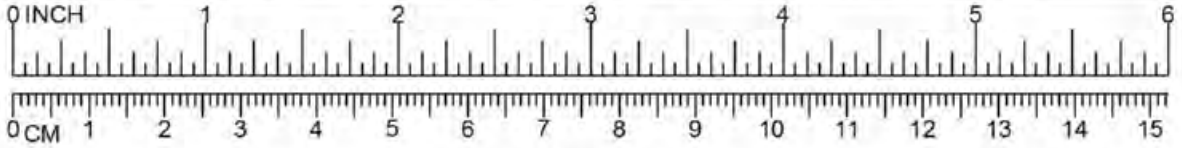

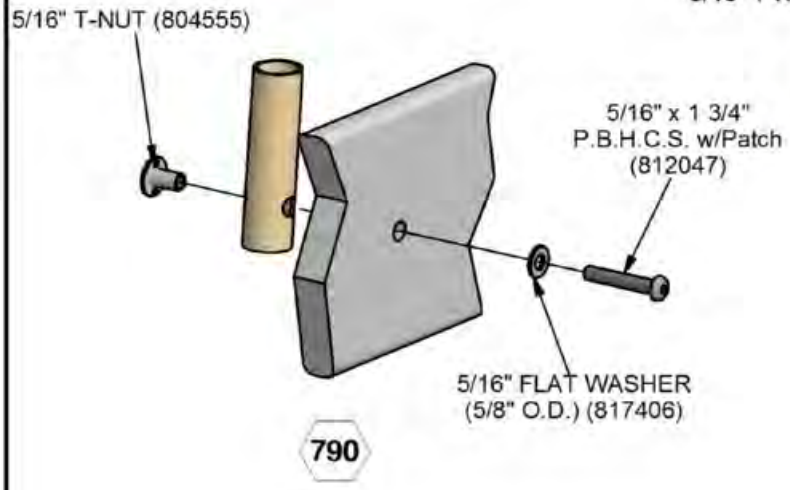

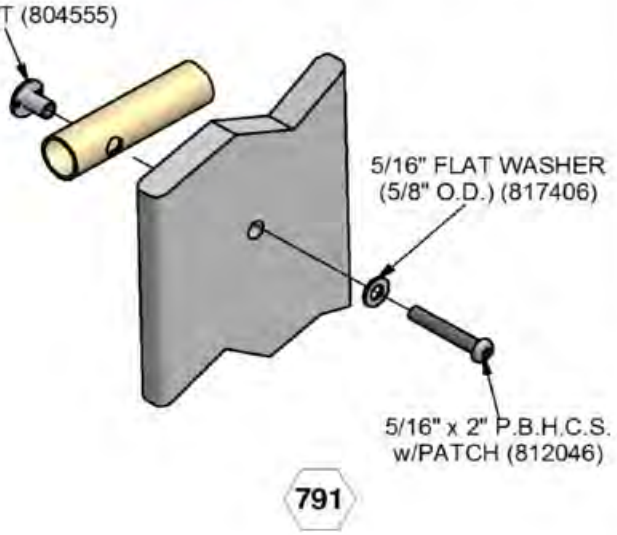

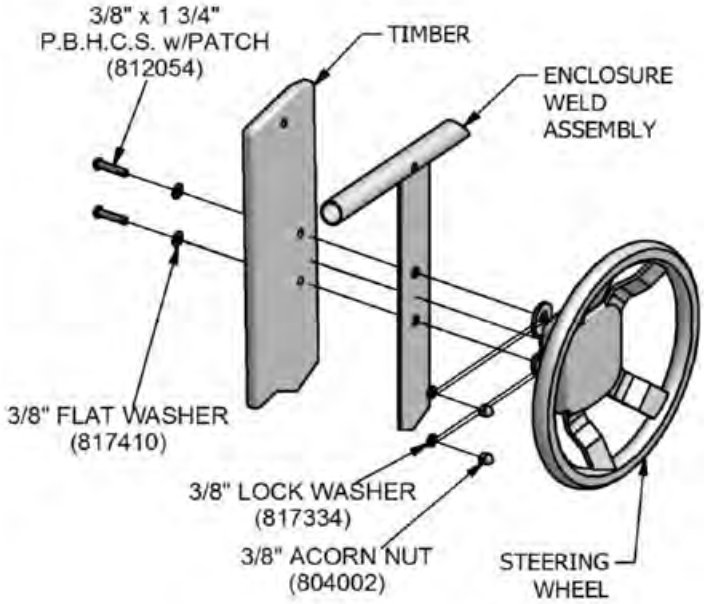

PowerScape

GameTime

A PLAYCORE Company

1-800-235-2440

ISSUED/REVISED: 9/17/18

3963RP

12' SPIRAL SLIDE w/ SLIDE PANEL

= INSTALLATION DETAIL

= PARTS LIST REFERENCE

12' SPIRAL SLIDE w SLIDE PANEL (REVERSE) 3981RP

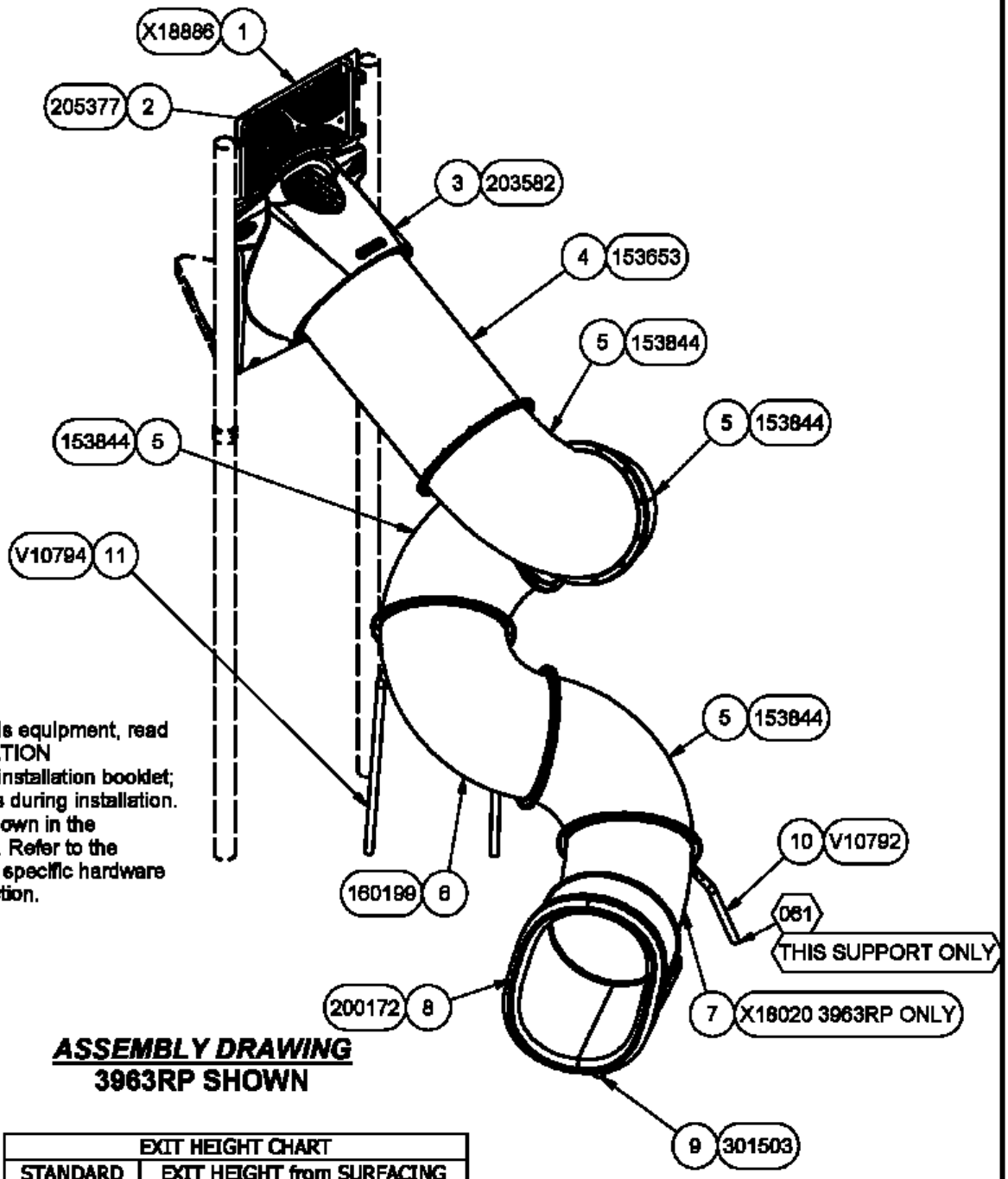

INSTALLATION INSTRUCTIONS

1. Before assembling this equipment, read the enclosed INSTALLATION INSTRUCTIONS in the installation booklet; follow all the instructions during installation.
2. Assemble parts as shown in the ASSEMBLY DRAWING. Refer to the assembly details for the specific hardware required in each connection.

ASSEMBLY DRAWING

3963RP SHOWN

EXIT HEIGHT CHART	
STANDARD	EXIT HEIGHT from SURFACING
ASTM	7" TO 15"
CSA	175mm TO 380mm
EN	350mm OR LESS

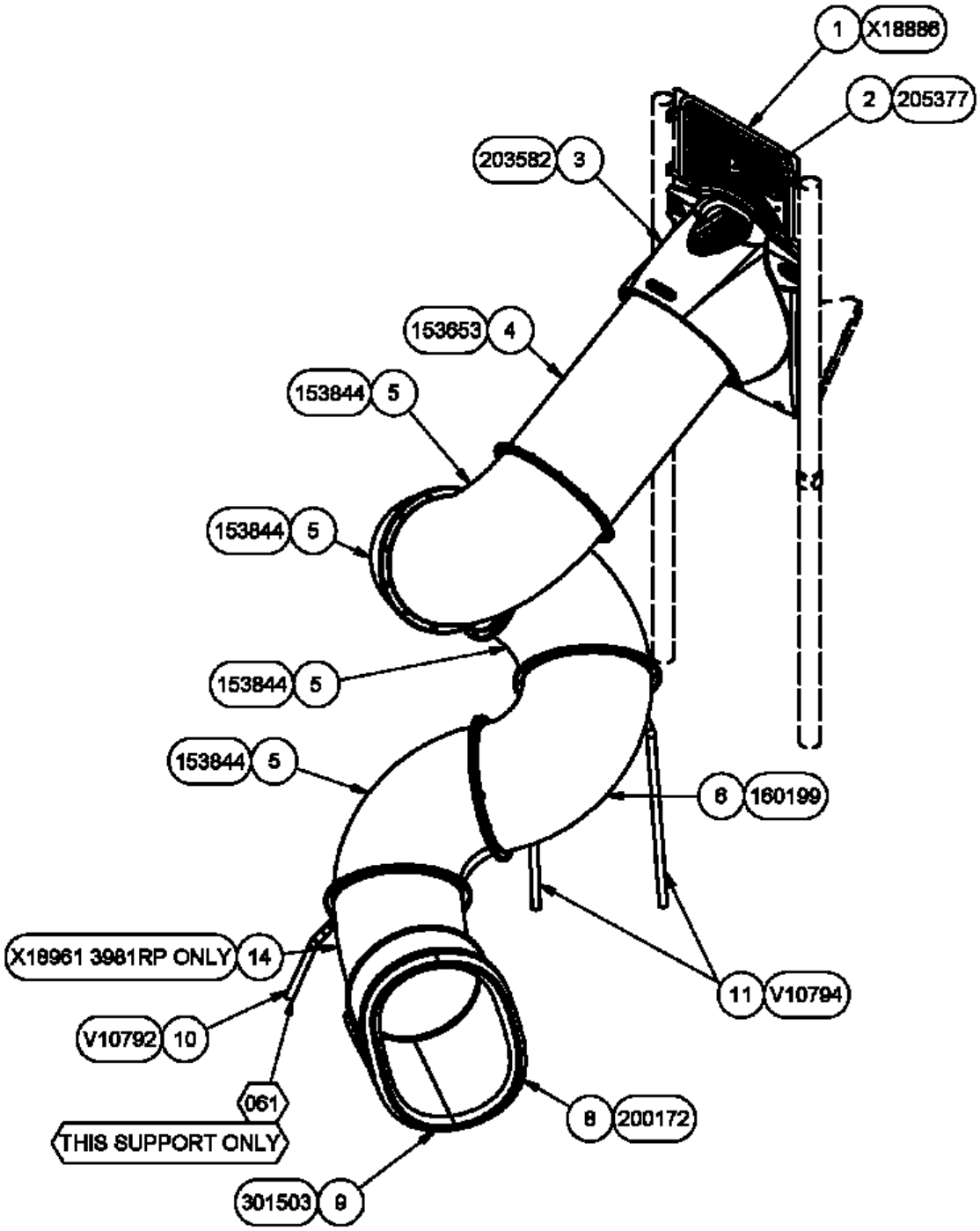

EXIT HEIGHT CHART	
STANDARD	EXIT HEIGHT from SURFACING
ASTM	7" TO 15"
CSA	175mm TO 380mm
EN	350mm OR LESS

ASSEMBLY DRAWING
3981RP SHOWN

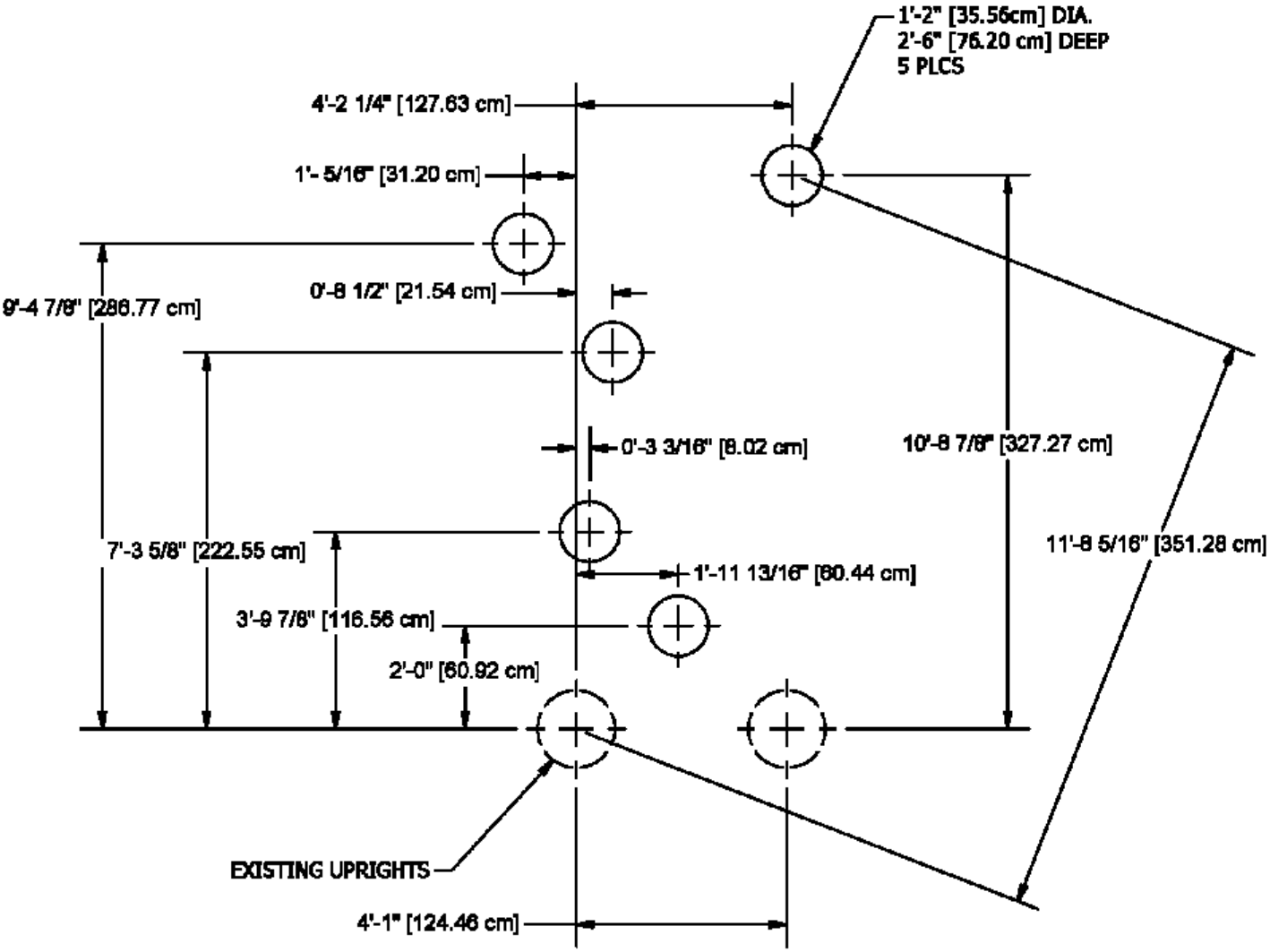

GROUND PLAN
3963RP

NOTE: HOLE DEPTHS INDICATED ON ALL GROUND PLANS ARE MEASURED FROM THE FINISHED SURFACE. SEE DETAIL 032. ALL FOOTING DIMENSIONS ARE BASED ON LEVEL FINISHED SURFACE.

CONCRETE REQUIRED
.030 CUBIC YARDS
[.23 CUBIC METERS]

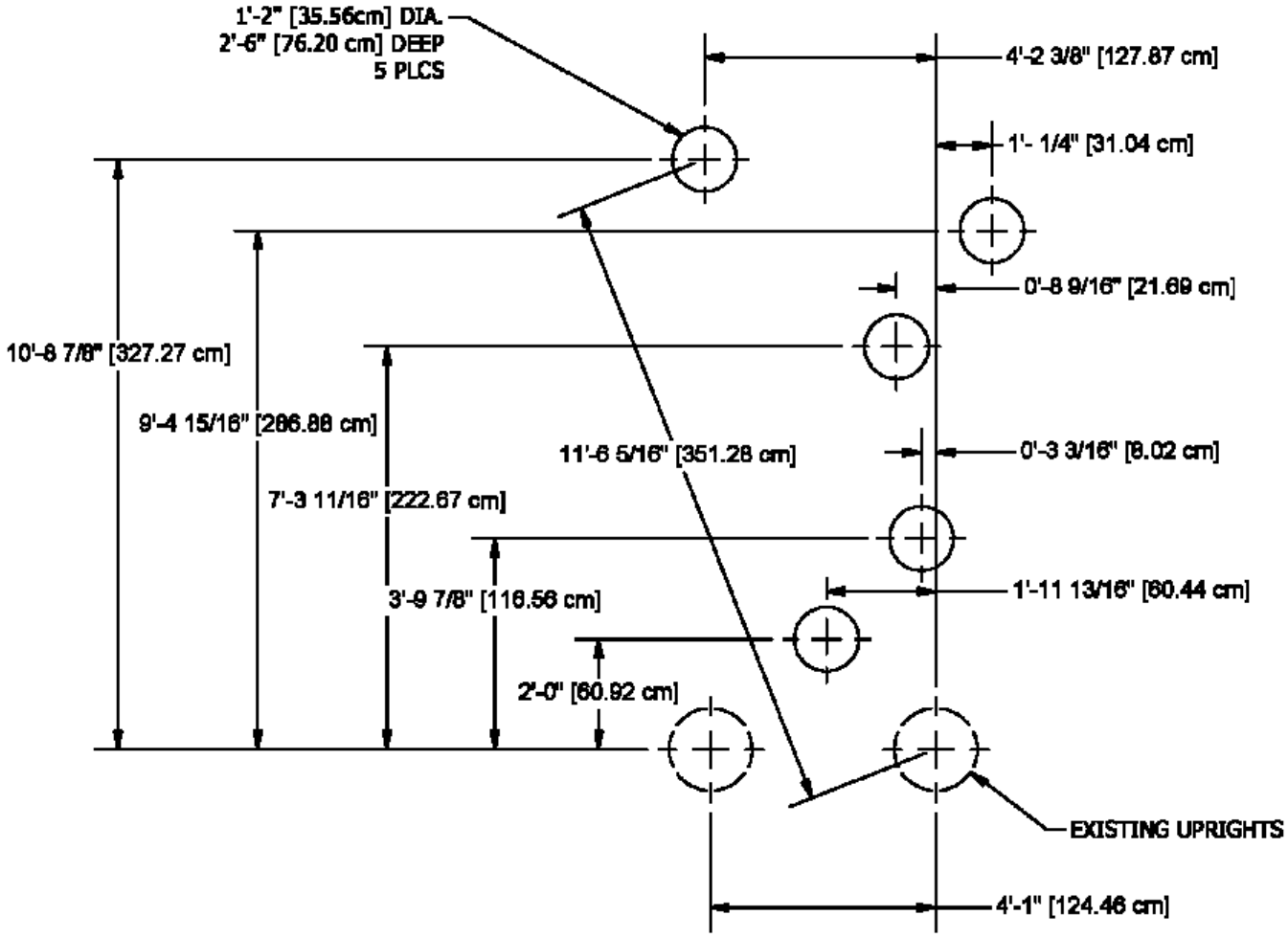

GROUND PLAN
3981RP

NOTE: HOLE DEPTHS INDICATED ON ALL GROUND PLANS ARE MEASURED FROM THE FINISHED SURFACE. SEE DETAIL 032. ALL FOOTING DIMENSIONS ARE BASED ON LEVEL FINISHED SURFACE.

CONCRETE REQUIRED
.030 CUBIC YARDS
[.23 CUBIC METERS]

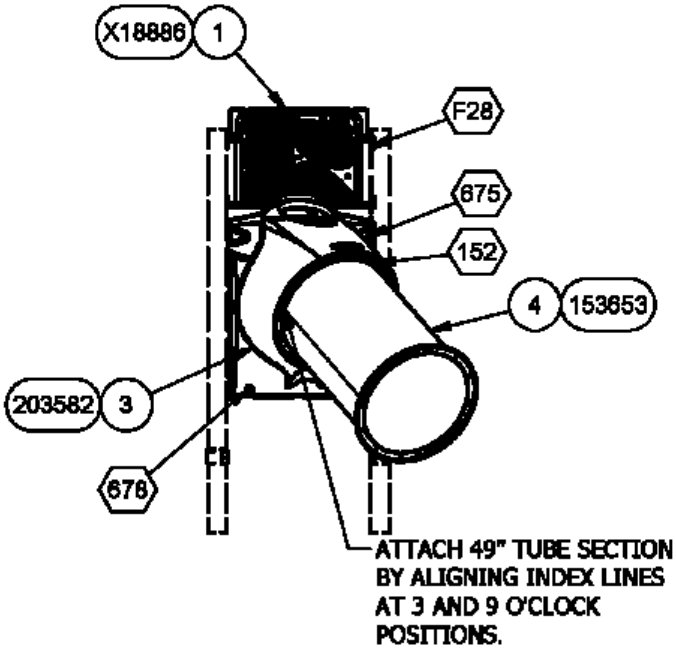

FIRST TUBE SECTION ASSEMBLY

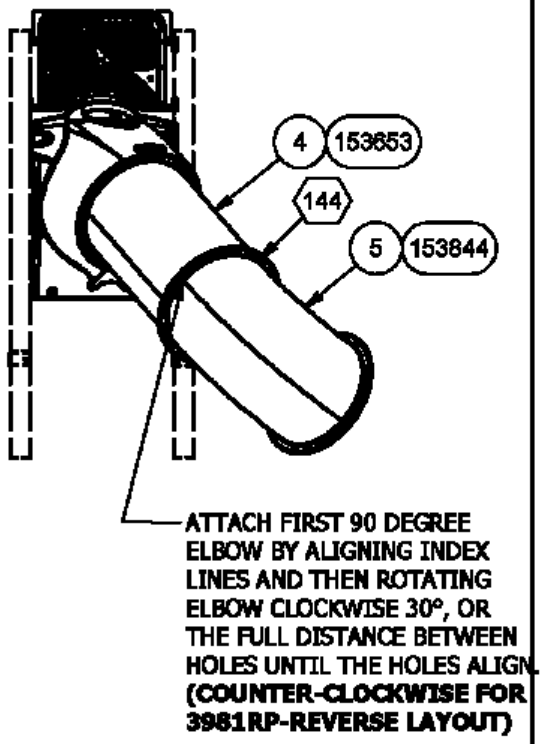

SECOND TUBE SECTION ASSEMBLY

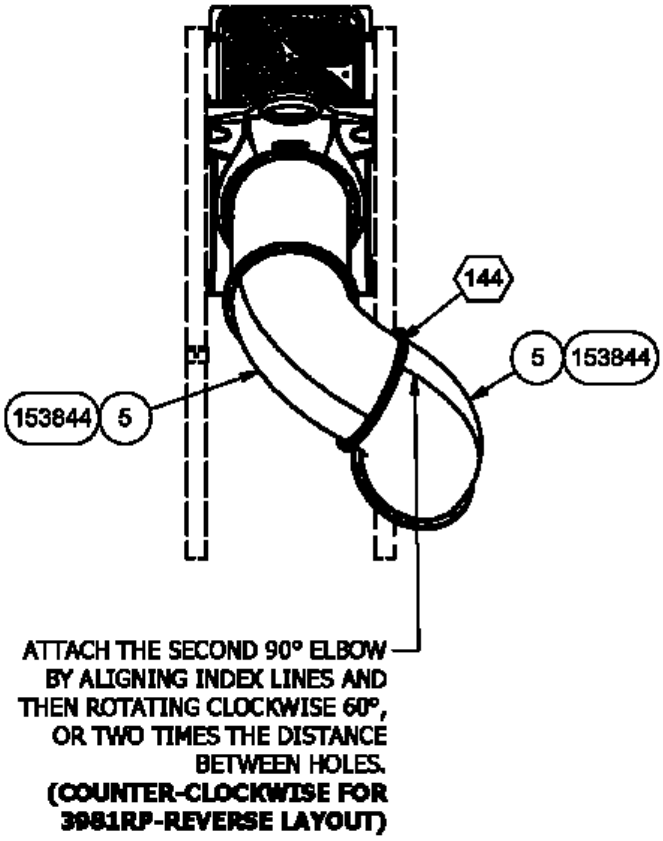

THIRD TUBE SECTION ASSEMBLY

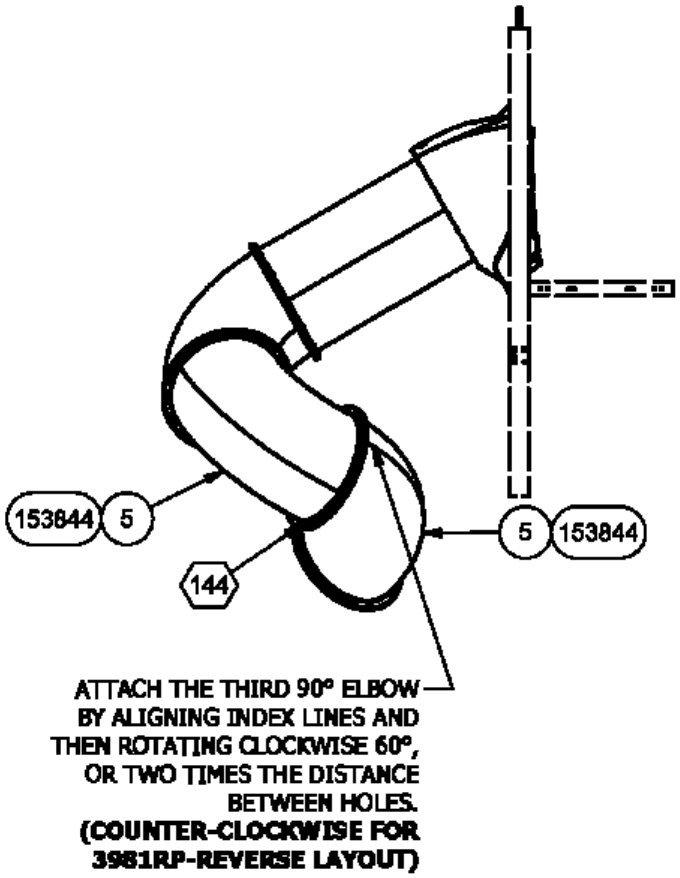

FOURTH TUBE SECTION ASSEMBLY

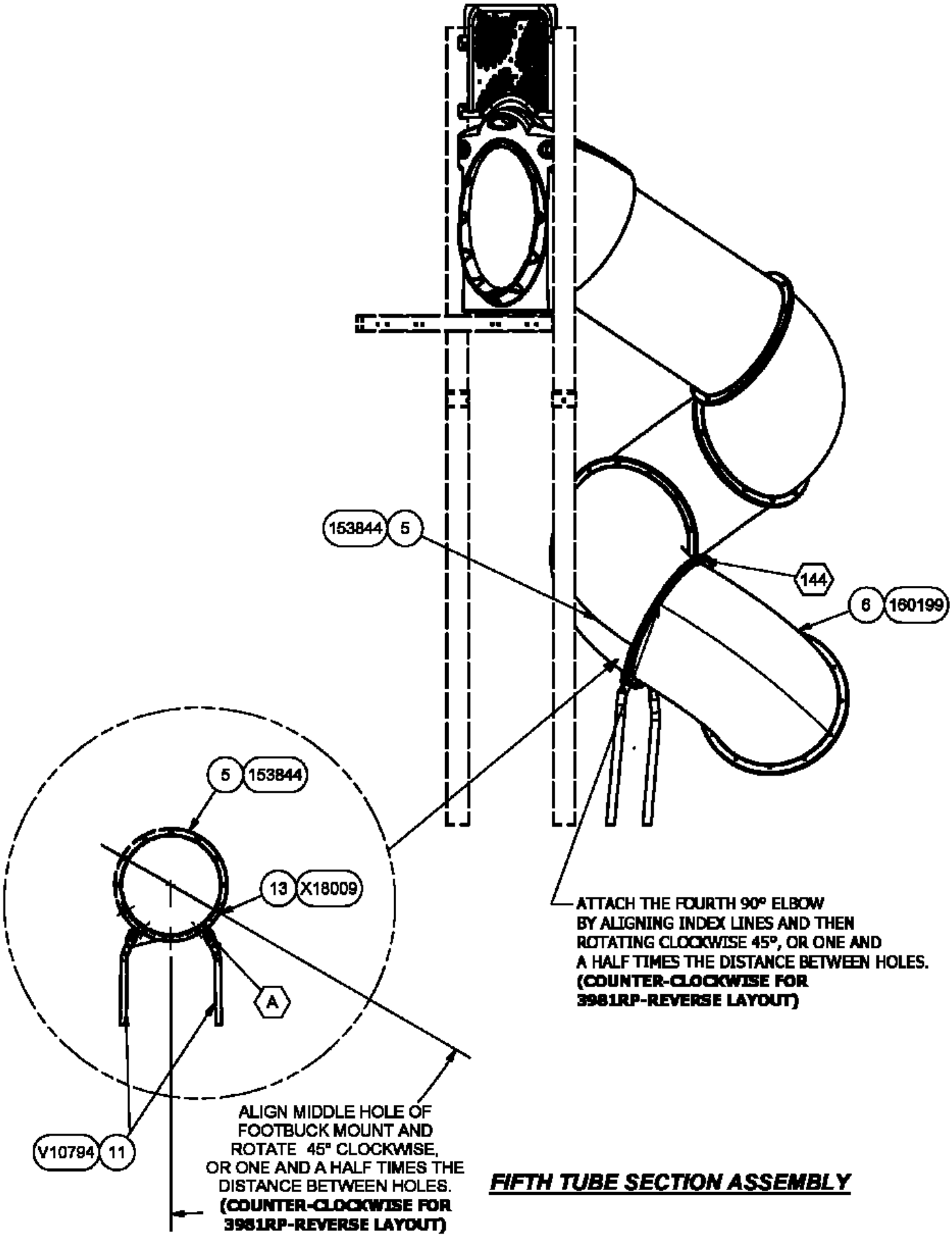

FIFTH TUBE SECTION ASSEMBLY

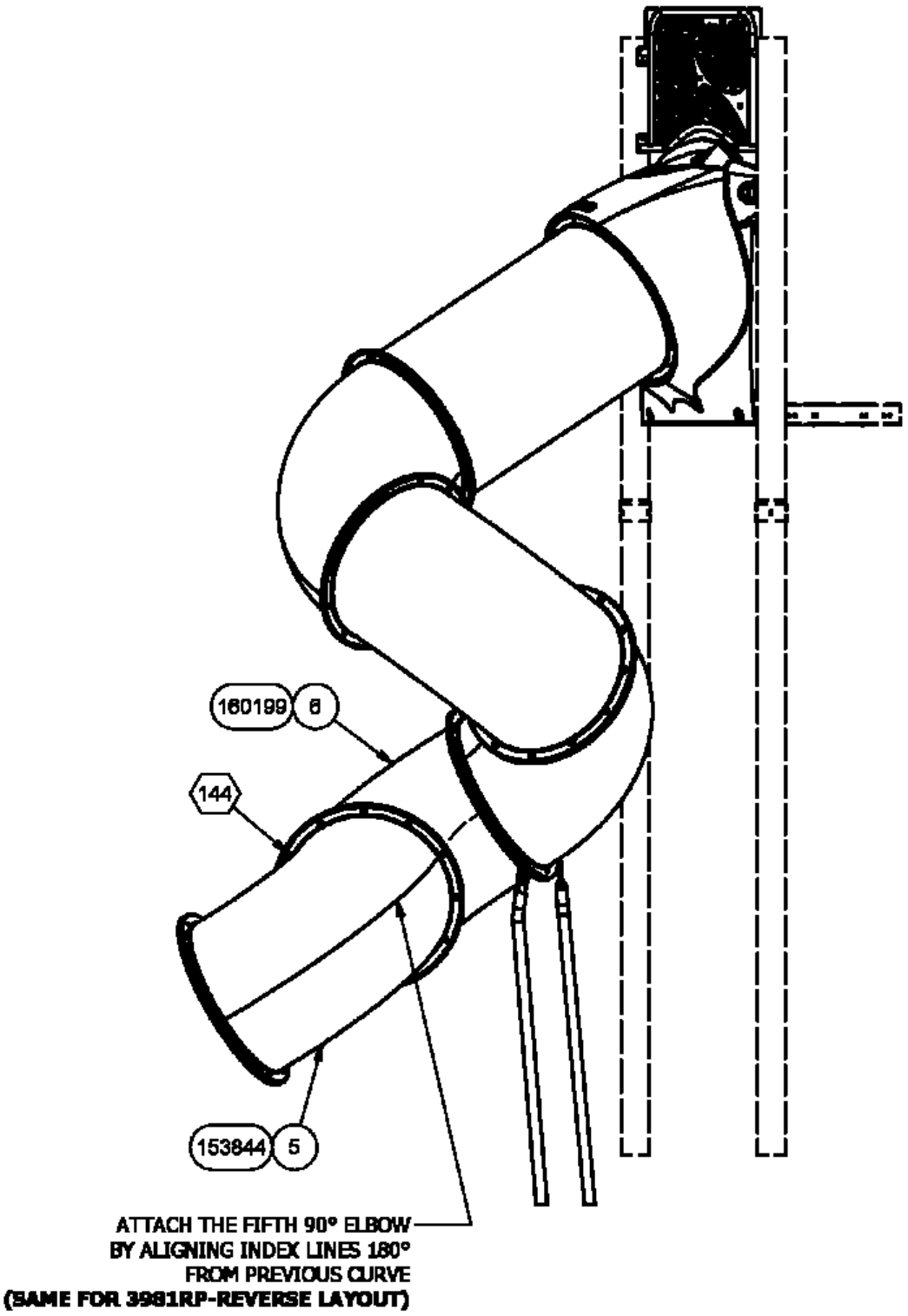

SIXTH TUBE SECTION ASSEMBLY

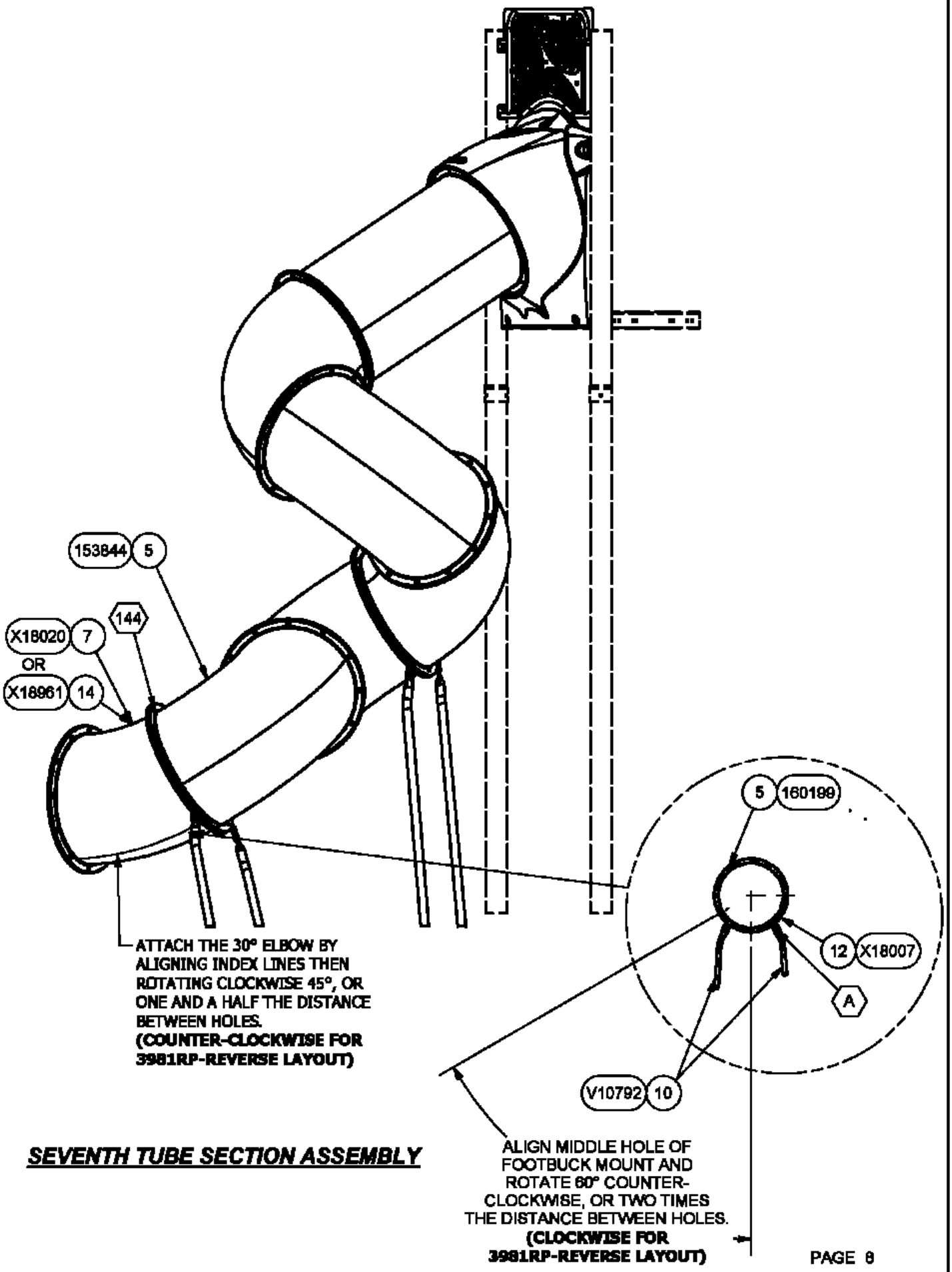

SEVENTH TUBE SECTION ASSEMBLY

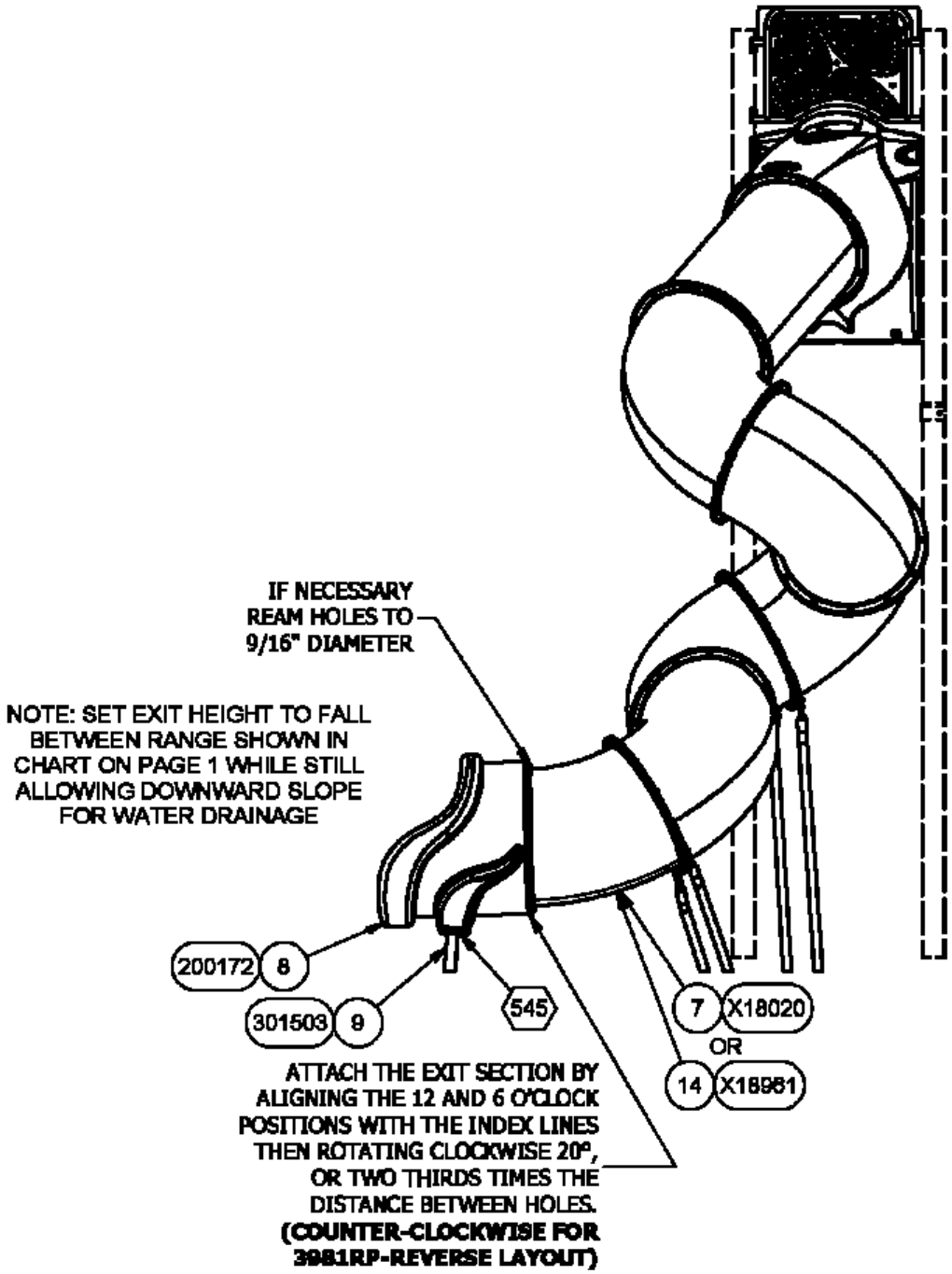

EXIT SECTION ASSEMBLY

Parts List				
REF.	DESCRIPTION	3963RP	3961RP	PART#
1	SLIDE ENCLOSURE WELD ASS'Y	1	1	X18886
2	ARCH BRIDGE TRIM 3	1	1	205377
3	TUBE ENTRANCE	1	1	203582
4	49" TUBE SECTION (Ø30")	1	1	153653
5	90° ELBOW	4	4	153844
6	90° TUBE SECTION w/15° OFFSET	1	1	160199
7	TUBE ELBOW w/10° HOLE OFFSET	1	0	X18020
8	30" EXIT SECTION	1	1	200172
9	FOOTBUCK	1	1	301503
10	SHORT FORMED FOOTBUCK	2	2	V10792
11	LONG FORMED FOOTBUCK	2	2	V10794
12	FOOTBUCK SADDLE 15°	1	1	X18007
13	FOOTBUCK SADDLE 30°	1	1	X18009
14	TUBE ELBOW w/-10° HOLE OFFSET	0	1	X18961
	HARDWARE COMPLETE	1	1	3963HW
	1/4" CHERRY-MATE RIVET	4	4	135499*
	1/4" FLAT WASHER (5/8" O.D.)	4	4	817408*
	5/16" x 3/4" P.B.H.C.S. w/PATCH	70	70	812040*
	5/16" x 1" P.B.H.C.S. w/PATCH	34	34	812042*
	5/16" FLATWASHER (1 1/8" O.D.)	86	86	817403*
	5/16" LOCKWASHER	104	104	817330*
	5/16" T-NUT (SHORT)	80	80	804558*
	3/8" x 1" P.B.H.C.S. w/PATCH	2	2	812050*
	3/8" x 1 1/4" P.B.H.C.S. w/PATCH	4	4	812051*
	3/8" x 2" P.B.H.C.S. w/PATCH	2	2	812055*
	3/8" x 2 1/4" P.B.H.C.S. w/PATCH	2	2	812056*
	3/8" FLAT WASHER (1 1/4" O.D.)	6	6	817424*
	3/8" x 3" HEX HEAD BOLT	1	1	801011*
	3/8" LOCK WASHER	10	10	817334*
	3/8" T-NUT	2	2	804556*
	3/8" HEX NUT	1	1	804053*
	FOOTBUCK EXTENSION	1	1	302145*
	5/16" FLAT WASHER	8	8	817406*
	3/8" FLAT WASHER (1" O.D.)	8	8	817401*

Unless Otherwise Specified, All Units of Measure are Each
** Included in Hardware*

Warning: During Installation, Hardware And Small Parts Are Choking Hazards For Young Children. Store Unused Parts Appropriately Until Assembly Is Completed. Once Assembly Is Completed, Remove Any Unused Parts From The Play Environment And Dispose/Save Them In A Secure Location.

Note: Peen Tee-Nuts and Flatwashers to match radius of pipe after assembly is complete.
Note: Loctite (supplied by others) should be used on any non-patch hardware.

DETAILS -for-
3963RP & 3981RP

IMPORTANT

TO REDUCE THE RISK OF CLOTHING ENTANGLEMENT IN COMPLIANCE WITH ASTM F1487, ANY BOLT END PROTRUDING MORE THAN TWO FULL THREADS BEYOND THE FACE OF THE NUT SHALL BE CUT-OFF FLUSH, FILED SMOOTH AND TREATED TO PREVENT CORROSION.

NOTE: LOCTITE (SUPPLIED BY OTHERS) SHOULD BE USED ON ALL THREADED HARDWARE.

NOTE: AFTER ASSEMBLY IS COMPLETE, PEEN TEE-NUTS AND FLATWASHERS TO MATCH RADIUS OF PIPE.

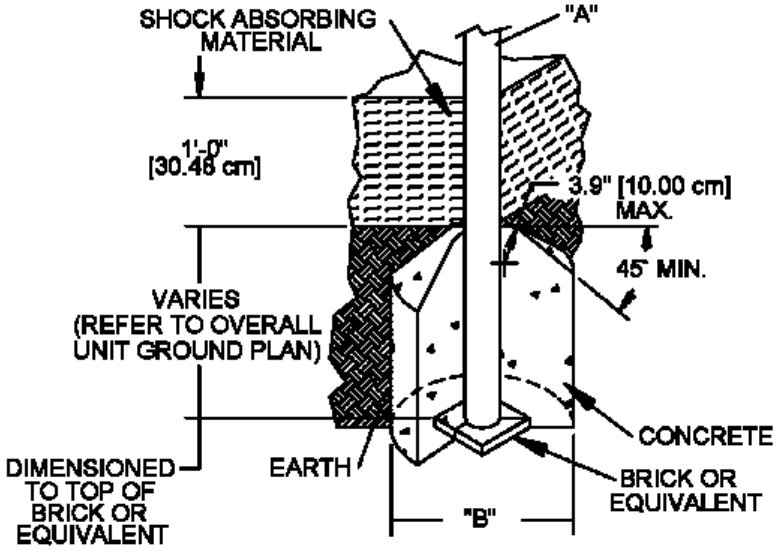

DIA. "A" (PIPE SIZE)	DIA. "B" (FOOTING SIZE)
1 1/16" [2.70 cm]	1'-2" [35.56 cm]
1 5/16" [3.33 cm]	1'-2" [35.56 cm]
1 5/8" [4.13 cm]	1'-2" [35.56 cm]
1 7/8" [4.83 cm]	1'-2" [35.56 cm]
2 3/8" [6.03 cm]	1'-2" [35.56 cm]
3 1/2" [8.89 cm]	1'-6" [45.72 cm]
5" [12.70 cm]	1'-6" [45.72cm]
TRACK RIDE & SWINGS	
5" [12.70 cm]	2'-0" [60.96 cm]
TREE SCAPE	
5" [12.70 cm]	4'-0" [121.92 cm]

NOTES:
- SLOPED FOOTING IS A REQUIREMENT OF EUROPEAN STANDARD EN1176-1 ONLY
- SUGGESTED MINIMUM CONCRETE RATING: 3000 PSI

032

SHOCK ABSORBING PROPERTIES OF SURFACING MATERIALS VARY. IF YOU DETERMINE THAT LESS THAN 1'-0" [30.48cm] OF SURFACING IS REQUIRED, MAKE UP THE DIFFERENCE IN ELEVATION WITH EARTH, BEFORE APPLYING SURFACING.

LEG (PIPE DIA.)	BOLT REQUIRED
1 5/16" [3.3 cm]	3/8" x 2" HEX HEAD (801007)
1 5/8" [4.1 cm]	3/8" x 2 1/2" HEX HEAD (801009)
1 7/8" [4.7 cm]	3/8" x 3" HEX HEAD (801011)
2 3/8" [6.0 cm]	3/8" x 3 1/2" HEX HEAD (801013)
2 7/8" [7.3 cm]	3/8" x 4" HEX HEAD (801015)

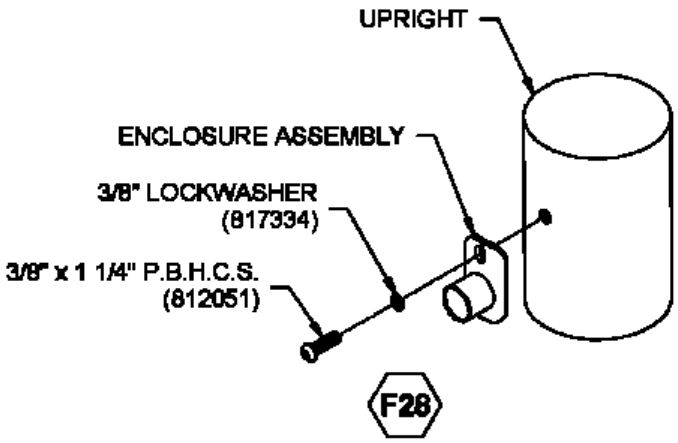

F28

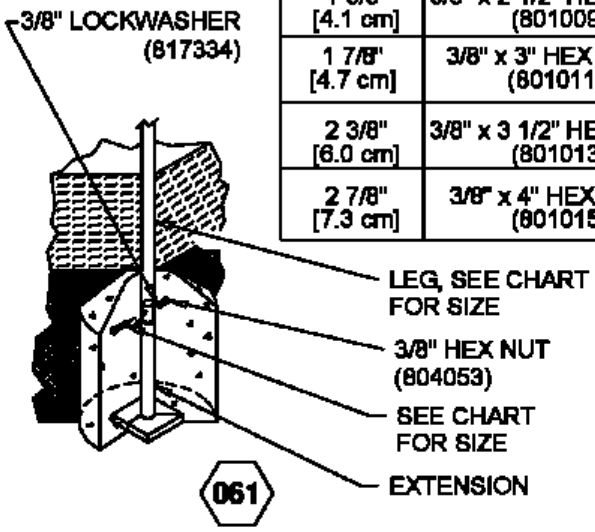

061

DETAILS -for-
3963RP & 3981RP

IMPORTANT

TO REDUCE THE RISK OF CLOTHING ENTANGLEMENT IN COMPLIANCE WITH ASTM F1487, ANY BOLT END PROTRUDING MORE THAN TWO FULL THREADS BEYOND THE FACE OF THE NUT SHALL BE CUT-OFF FLUSH, FILED SMOOTH AND TREATED TO PREVENT CORROSION.

NOTE: LOCTITE (SUPPLIED BY OTHERS) SHOULD BE USED ON ALL THREADED HARDWARE.

NOTE: AFTER ASSEMBLY IS COMPLETE, PEEN TEE-NUTS AND FLATWASHERS TO MATCH RADIUS OF PIPE.

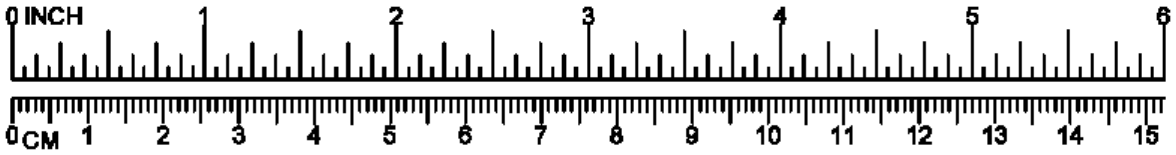

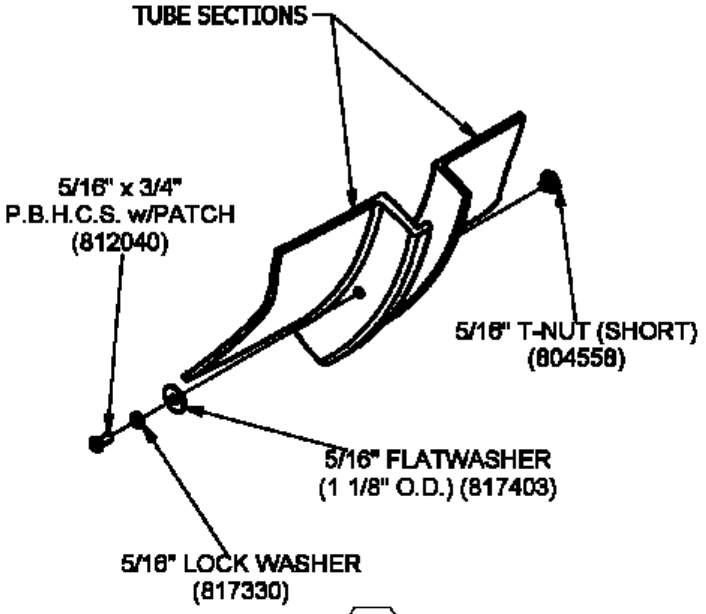

144

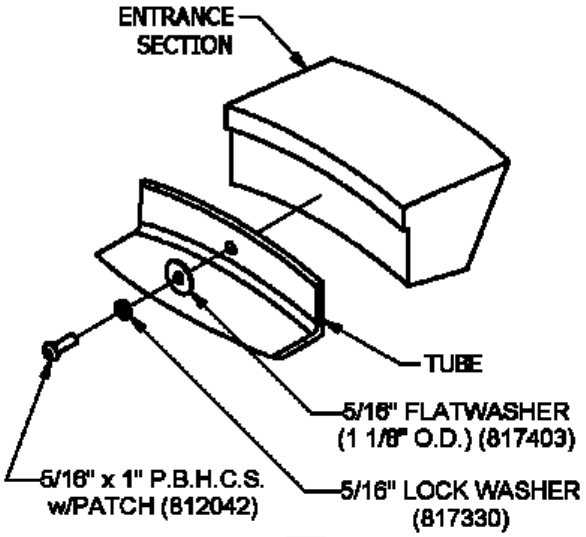

152

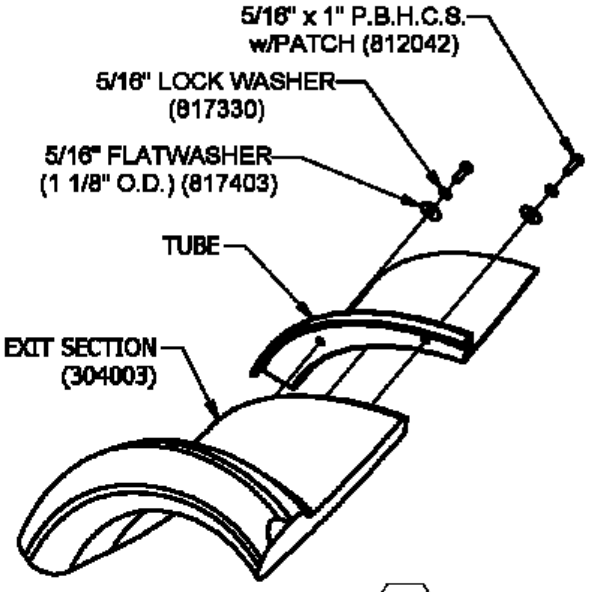

155

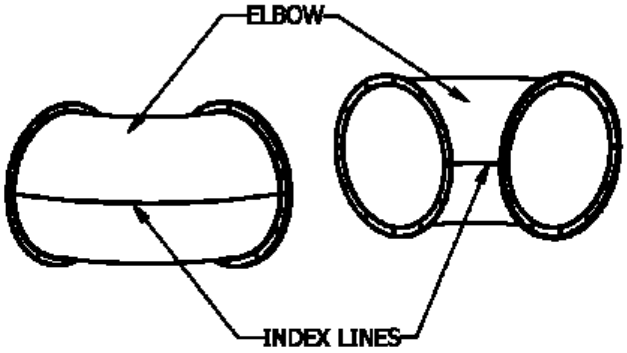

173

DETAILS -for-
3963RP & 3981RP

IMPORTANT

TO REDUCE THE RISK OF CLOTHING ENTANGLEMENT IN COMPLIANCE WITH ASTM F1487, ANY BOLT END PROTRUDING MORE THAN TWO FULL THREADS BEYOND THE FACE OF THE NUT SHALL BE CUT-OFF FLUSH, FILED SMOOTH AND TREATED TO PREVENT CORROSION.

NOTE: LOCTITE (SUPPLIED BY OTHERS) SHOULD BE USED ON ALL THREADED HARDWARE.

NOTE: AFTER ASSEMBLY IS COMPLETE, PEEN TEE-NUTS AND FLATWASHERS TO MATCH RADIUS OF PIPE.

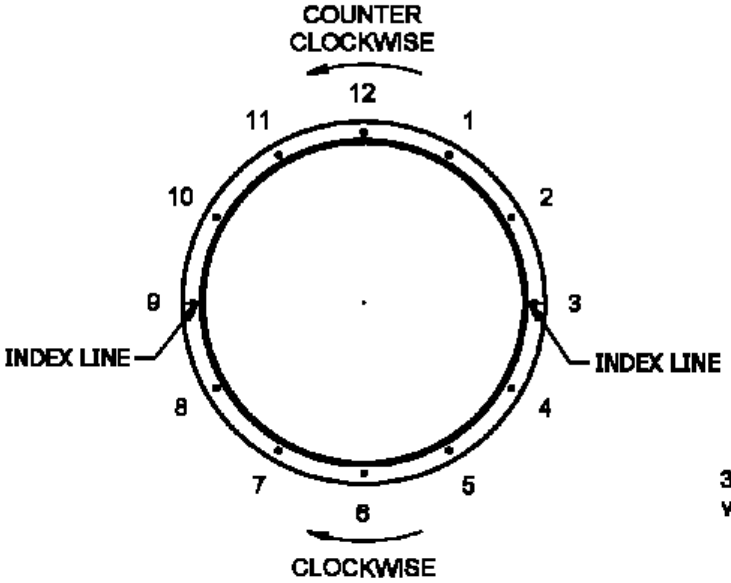

TYPICAL CLOCK REFERENCE FOR TUBE SLIDES

261

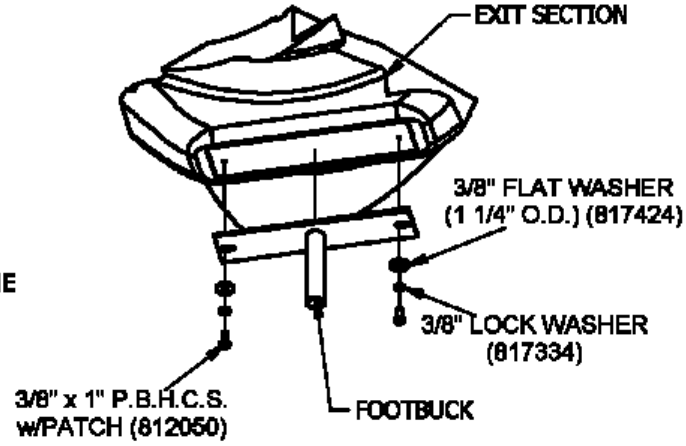

545

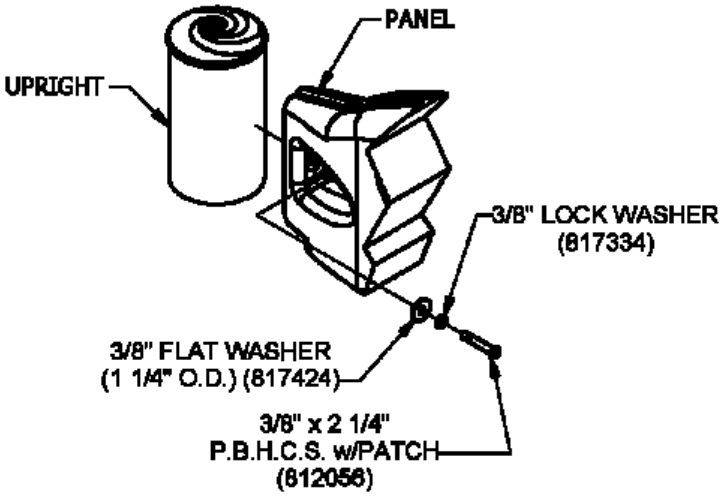

675

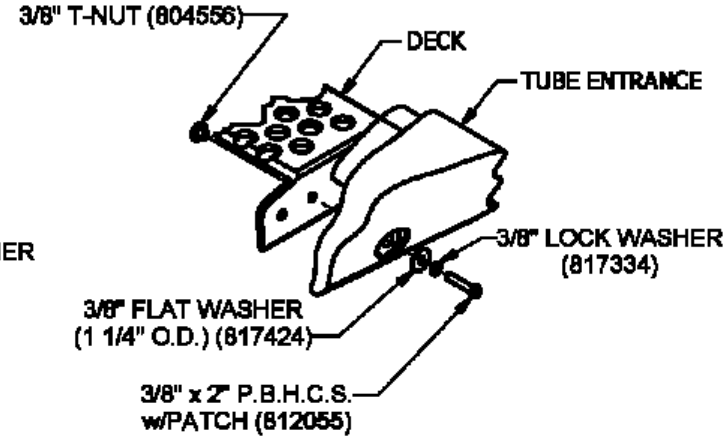

678

DETAILS -for-
3963RP & 3981RP

IMPORTANT

TO REDUCE THE RISK OF CLOTHING ENTANGLEMENT IN COMPLIANCE WITH ASTM F1487, ANY BOLT END PROTRUDING MORE THAN TWO FULL THREADS BEYOND THE FACE OF THE NUT SHALL BE CUT-OFF FLUSH, FILED SMOOTH AND TREATED TO PREVENT CORROSION.

NOTE: LOCTITE (SUPPLIED BY OTHERS) SHOULD BE USED ON ALL THREADED HARDWARE.

NOTE: AFTER ASSEMBLY IS COMPLETE, PEEN TEE-NUTS AND FLATWASHERS TO MATCH RADIUS OF PIPE.

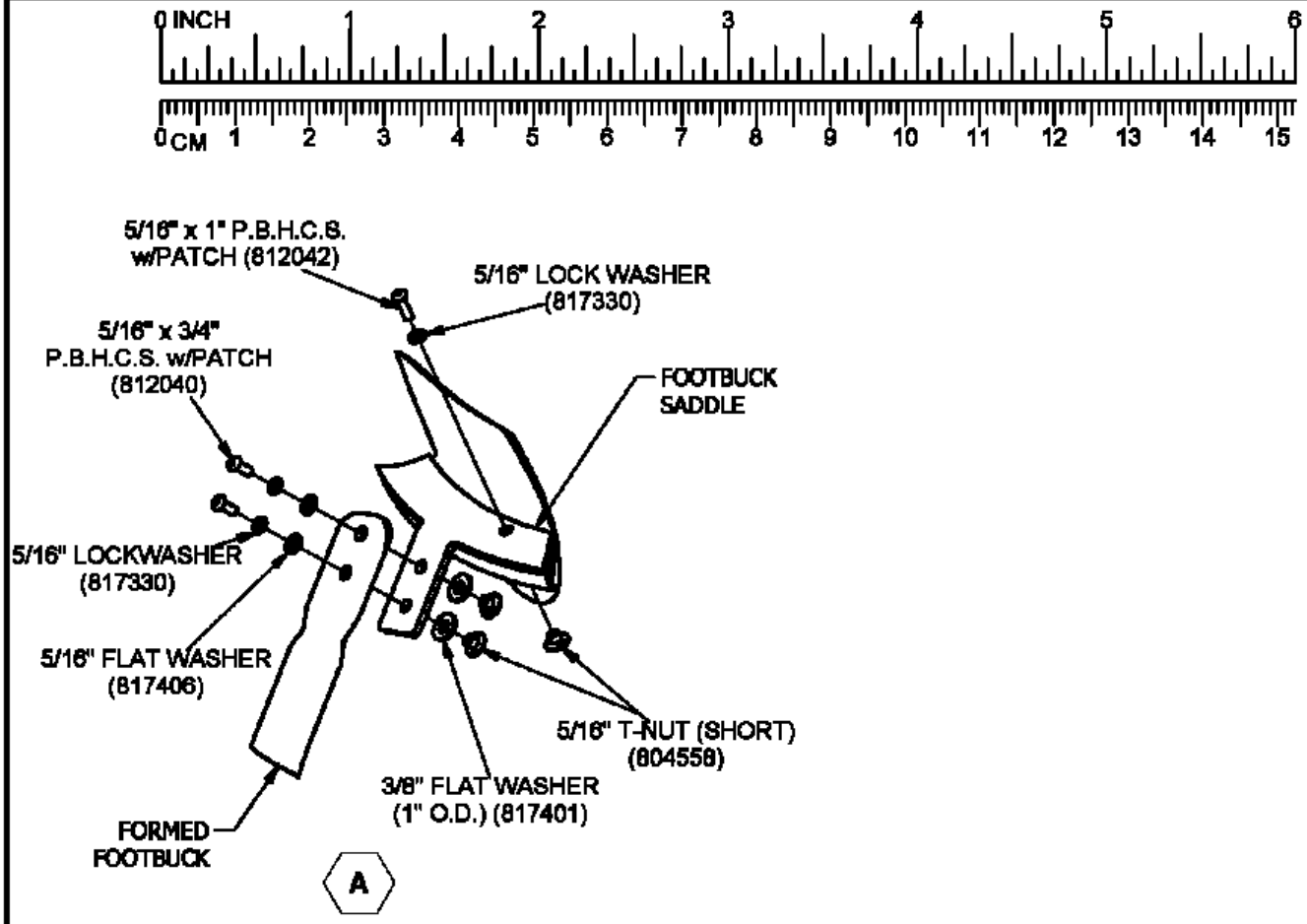

DETAILS -for-
3963RP & 3981RP

IMPORTANT

TO REDUCE THE RISK OF CLOTHING ENTANGLEMENT IN COMPLIANCE WITH ASTM F1487, ANY BOLT END PROTRUDING MORE THAN TWO FULL THREADS BEYOND THE FACE OF THE NUT SHALL BE CUT-OFF FLUSH, FILED SMOOTH AND TREATED TO PREVENT CORROSION.

NOTE: LOCTITE (SUPPLIED BY OTHERS) SHOULD BE USED ON ALL THREADED HARDWARE.

NOTE: AFTER ASSEMBLY IS COMPLETE, PEEN TEE-NUTS AND FLATWASHERS TO MATCH RADIUS OF PIPE.

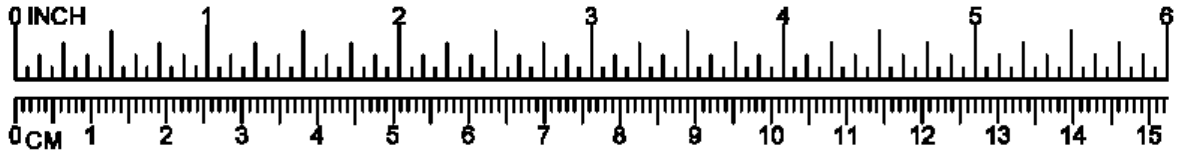

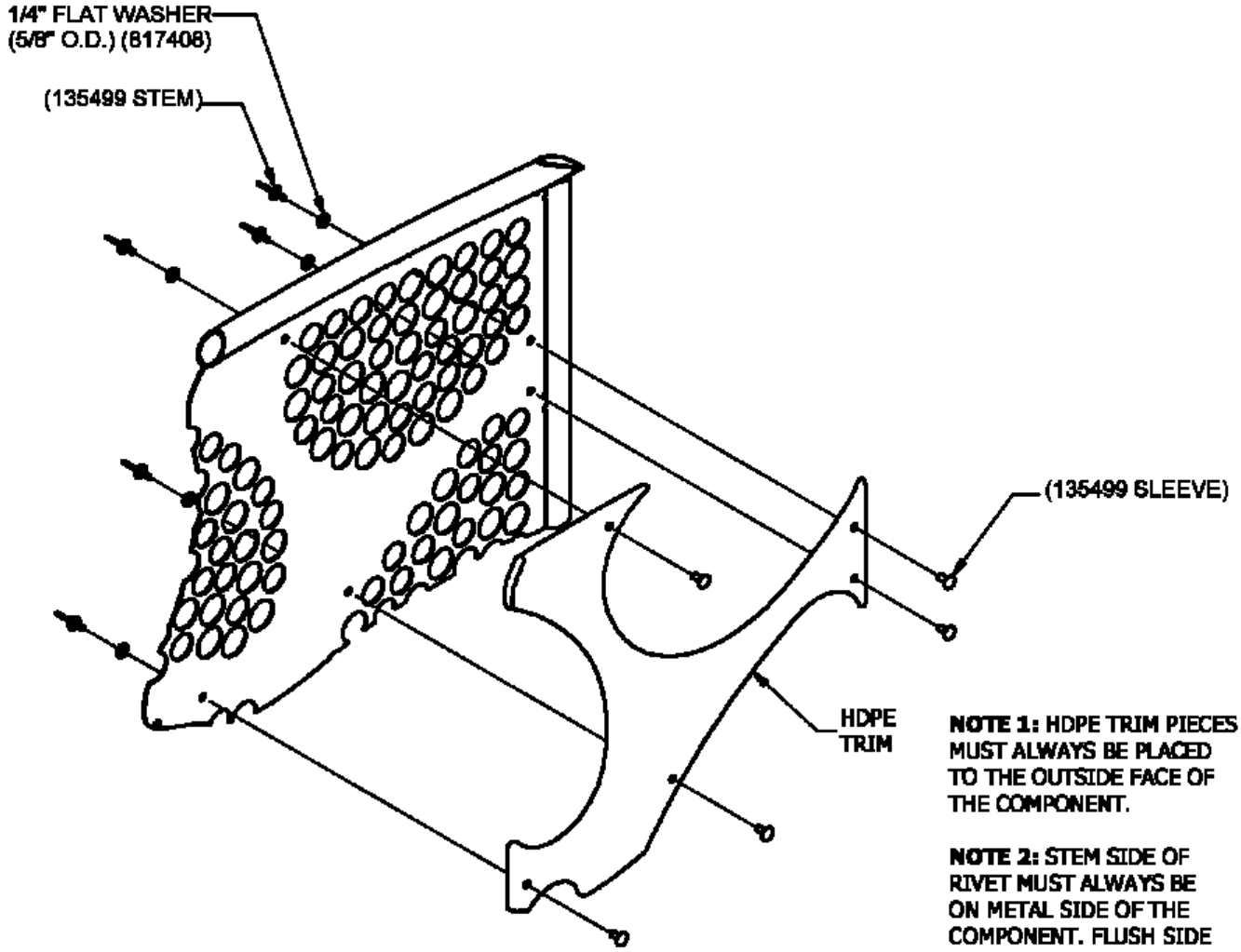

NOTE 1: HDPE TRIM PIECES MUST ALWAYS BE PLACED TO THE OUTSIDE FACE OF THE COMPONENT.

NOTE 2: STEM SIDE OF RIVET MUST ALWAYS BE ON METAL SIDE OF THE COMPONENT. FLUSH SIDE OF RIVET MUST ALWAYS BE ON THE HDPE SIDE OF COMPONENT.

743

PowerScape

GameTime

A PLAYCORE Company

1-800-235-2440

ISSUED/REVISED: 9/17/18

3964RP

PANEL ENCLOSURE

⬡ = INSTALLATION DETAIL

○ = PARTS LIST REFERENCE

INSTALLATION INSTRUCTIONS

1. Before assembling this equipment, read the enclosed INSTALLATION INSTRUCTIONS in the installation booklet; follow all the instructions during installation.
2. Assemble parts as shown in the ASSEMBLY DRAWING. Refer to the assembly details for the specific hardware required in each connection.

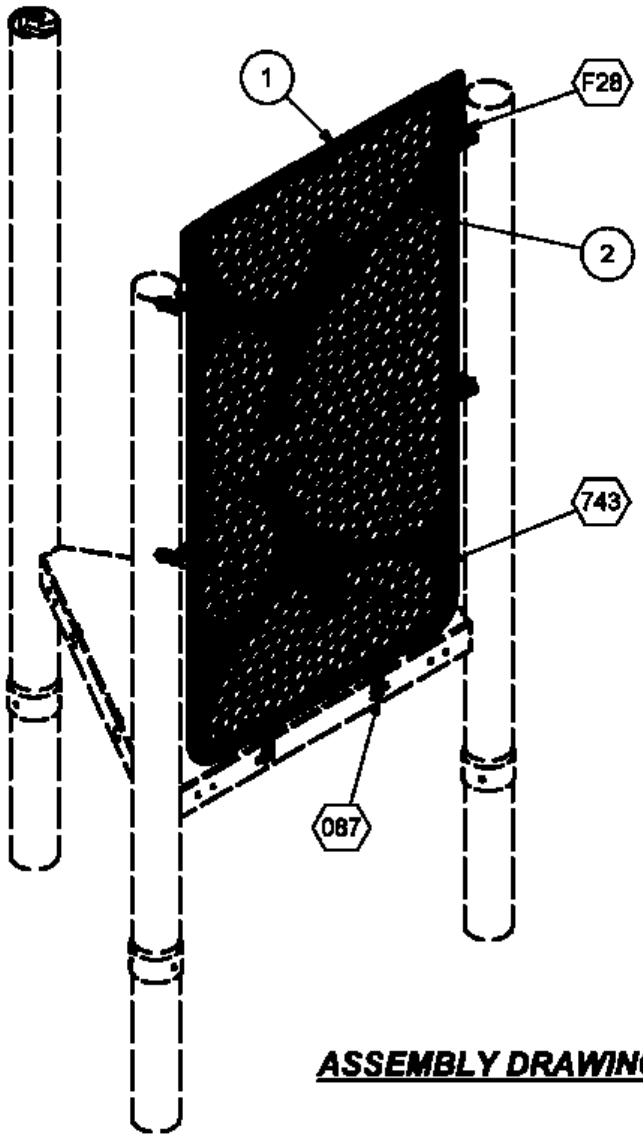

ASSEMBLY DRAWING

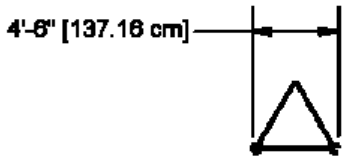

TOP VIEW

Parts List			
REF.	DESCRIPTION	QTY	PART#
1	SMALL PANEL WELD ASS'Y	1	X18890
2	PANEL TRIM LARGE	2	205278
	HARDWARE COMPLETE	1	3964HW
	1/4" CHERRY-MATE RIVET	16	135499*
	1/4" FLAT WASHER (5/8" O.D.)	16	817408*
	3/8" x 3/4" P.B.H.C.S. w/PATCH	2	812052*
	3/8" x 1 1/4" P.B.H.C.S. w/PATCH	4	812051*
	3/8" FLAT WASHER	2	817410*
	3/8" LOCK WASHER	6	817334*
	3/8" T-NUT	2	804556*

Unless Otherwise Specified, All Units of Measure are Each
** Included in Hardware*

Warning: During Installation, Hardware And Small Parts Are Choking Hazards For Young Children. Store Unused Parts Appropriately Until Assembly Is Completed. Once Assembly Is Completed, Remove Any Unused Parts From The Play Environment And Dispose/Save Them In A Secure Location.

Note: Peen Tee-Nuts and Flatwashers to match radius of pipe after assembly is complete.

Note: Loctite (supplied by others) should be used on any non-patch hardware.

DETAILS -for-
3964RP

IMPORTANT

TO REDUCE THE RISK OF CLOTHING ENTANGLEMENT IN COMPLIANCE WITH ASTM F1487, ANY BOLT END PROTRUDING MORE THAN TWO FULL THREADS BEYOND THE FACE OF THE NUT SHALL BE CUT-OFF FLUSH, FILED SMOOTH AND TREATED TO PREVENT CORROSION.

NOTE: LOCTITE (SUPPLIED BY OTHERS) SHOULD BE USED ON ALL THREADED HARDWARE.

NOTE: AFTER ASSEMBLY IS COMPLETE, PEEN TEE-NUTS AND FLATWASHERS TO MATCH RADIUS OF PIPE.

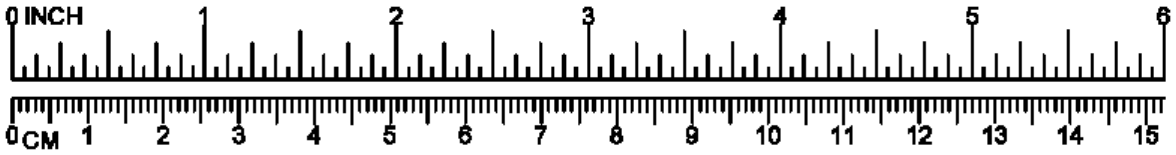

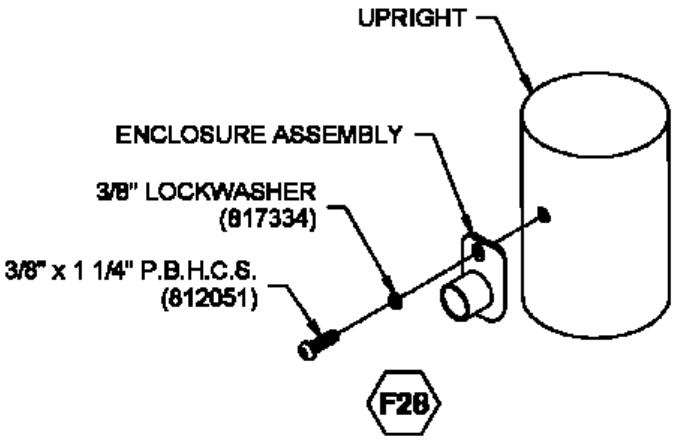

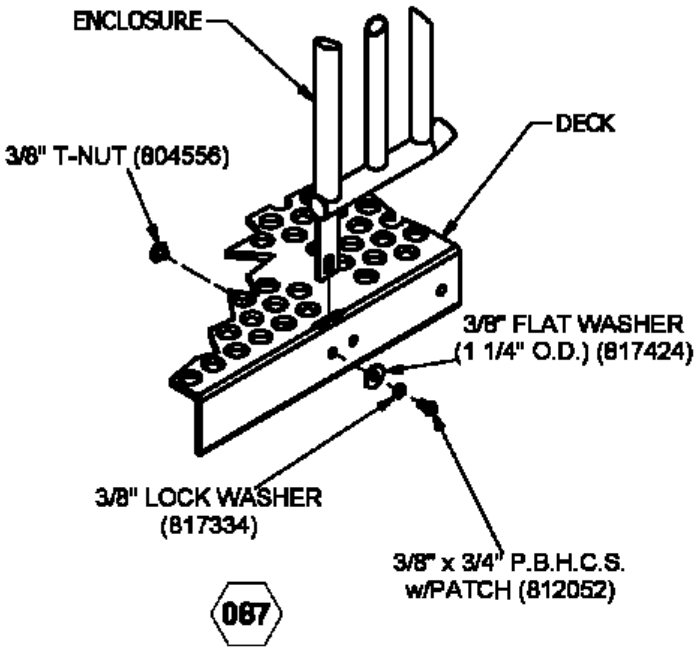

DETAILS -for-
3964RP

IMPORTANT

TO REDUCE THE RISK OF CLOTHING ENTANGLEMENT IN COMPLIANCE WITH ASTM F1487, ANY BOLT END PROTRUDING MORE THAN TWO FULL THREADS BEYOND THE FACE OF THE NUT SHALL BE CUT-OFF FLUSH, FILED SMOOTH AND TREATED TO PREVENT CORROSION.

NOTE: LOCTITE (SUPPLIED BY OTHERS) SHOULD BE USED ON ALL THREADED HARDWARE.

NOTE: AFTER ASSEMBLY IS COMPLETE, PEEN TEE-NUTS AND FLATWASHERS TO MATCH RADIUS OF PIPE.

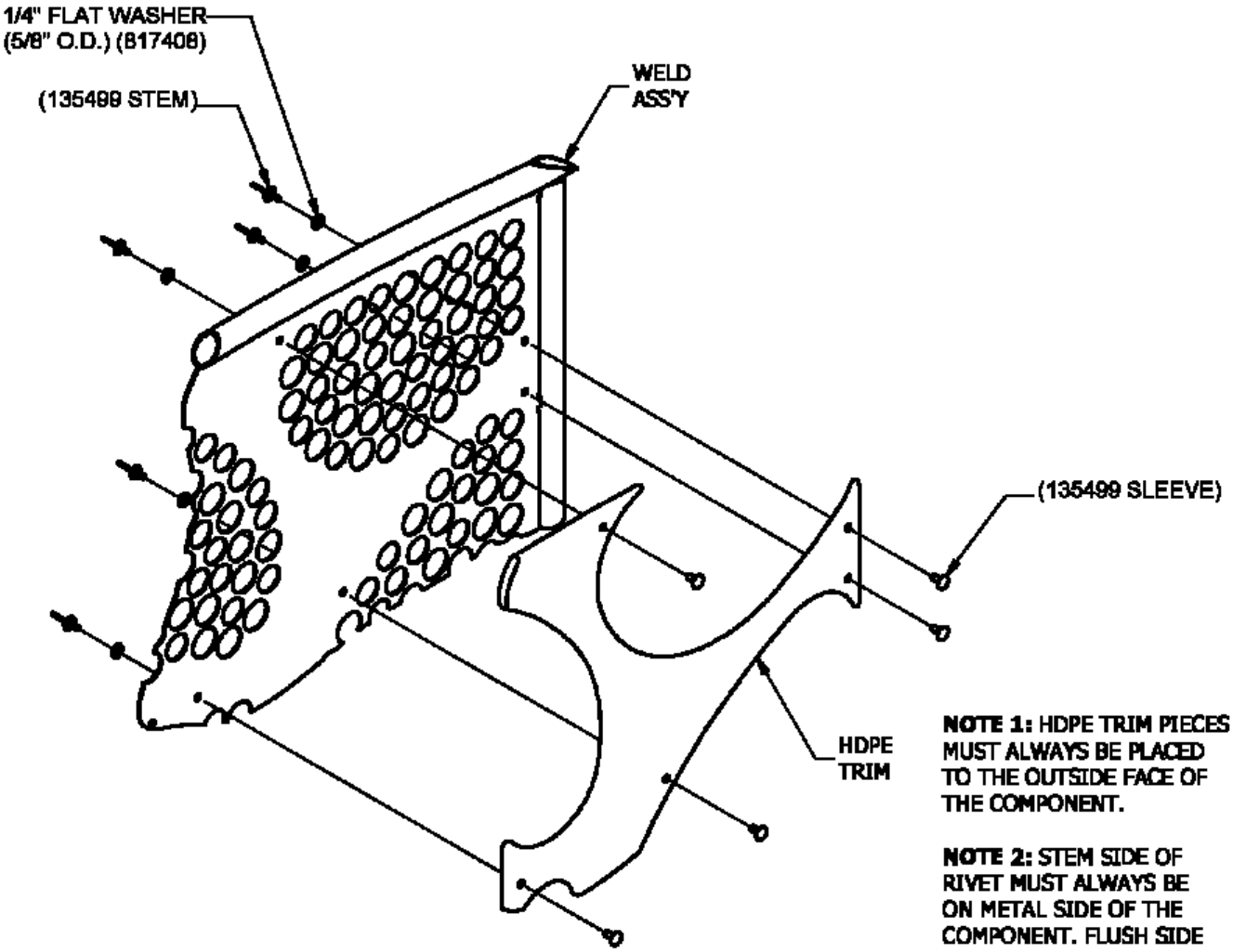

NOTE 1: HDPE TRIM PIECES MUST ALWAYS BE PLACED TO THE OUTSIDE FACE OF THE COMPONENT.

NOTE 2: STEM SIDE OF RIVET MUST ALWAYS BE ON METAL SIDE OF THE COMPONENT. FLUSH SIDE OF RIVET MUST ALWAYS BE ON THE HDPE SIDE OF COMPONENT.

743

PowerScape

GameTime

A PLAYCORE Company

1-800-235-2440

ISSUED/REVISED: 9/17/18

3966RP 4' SPIRAL STEPS w/ FILLER PLATE (REVERSE)

= INSTALLATION DETAIL

= PARTS LIST REFERENCE

4' SPIRAL STEPS w/ FILLER PLATE 3982RP

INSTALLATION INSTRUCTIONS

1. Before assembling this equipment, read the enclosed INSTALLER INSTRUCTIONS in the installation booklet; follow all the instructions during installation.
2. Assemble parts as shown in the ASSEMBLY DRAWING. Refer to the assembly details for the specific hardware required in each connection.

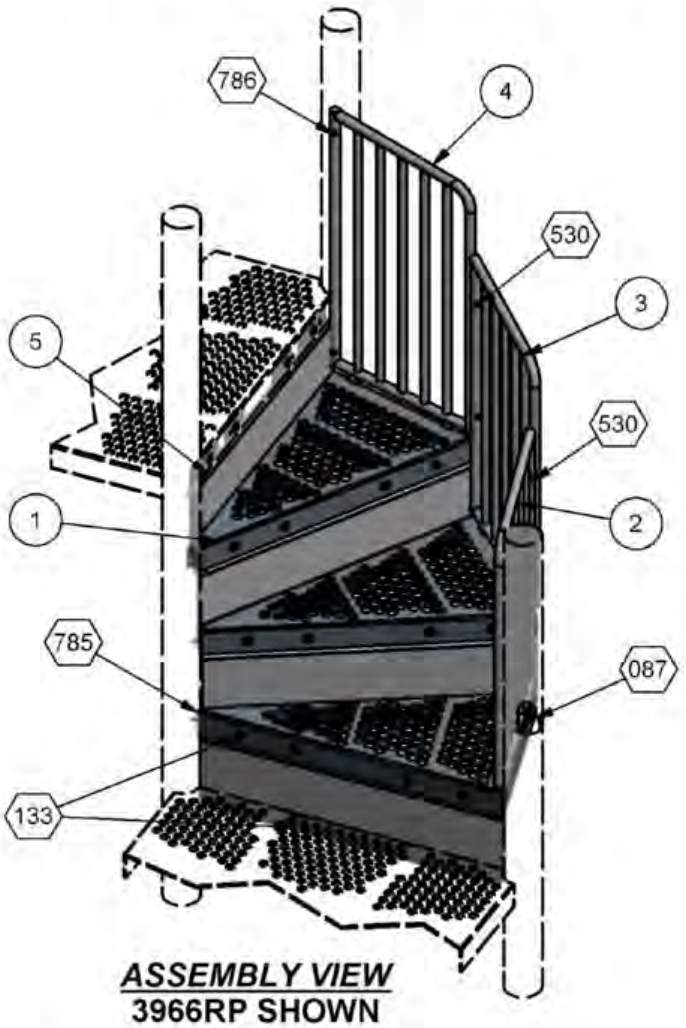

ASSEMBLY VIEW
3966RP SHOWN

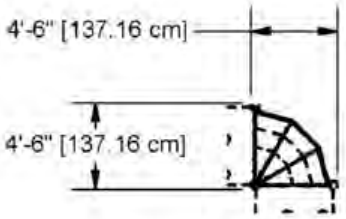

TOP VIEW
3966RP SHOWN

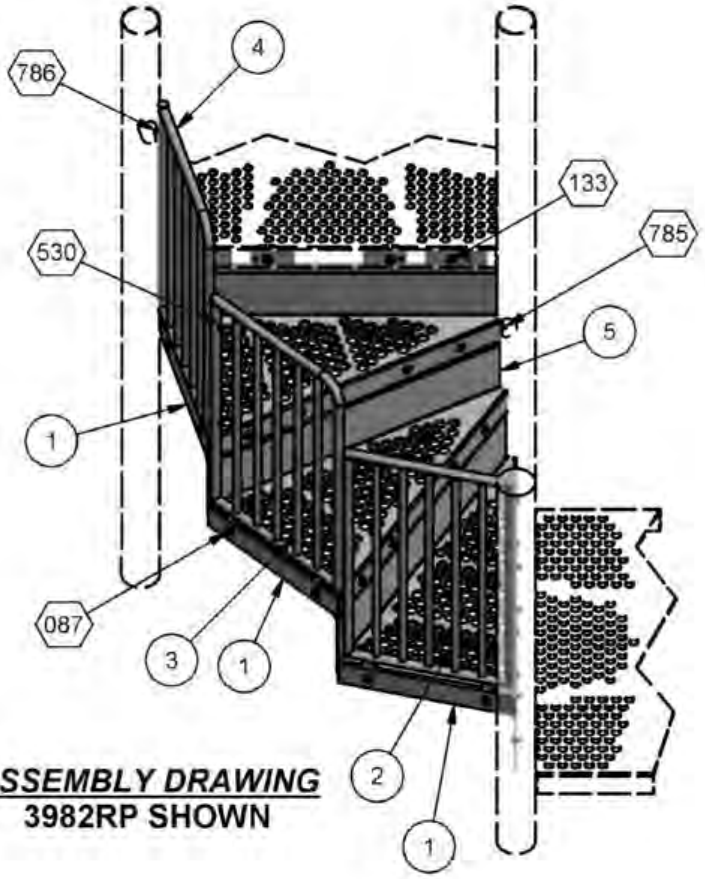

ASSEMBLY DRAWING
3982RP SHOWN

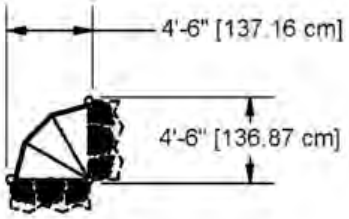

TOP VIEW
3982RP SHOWN

Parts List				
REF.	DESCRIPTION	3966RP	3982RP	PART NUMBER
1	COATED STEP	3	3	200093
2	LOWER BARRIER WELD ASS'Y	1	0	207002
2	LOWER ENCLOSURE WELD ASS'Y	0	1	200075
3	MIDDLE BARRIER WELD ASS'Y	1	0	207005
3	MIDDLE ENCLOSURE WELD ASS'Y	0	1	200082
4	UPPER BARRIER WELD ASS'Y	1	0	206992
4	UPPER ENCLOSURE WELD ASS'Y	0	1	200088
5	KICK PLATE	4	4	139253
	HARDWARE COMPLETE	1	1	3966HW
	3/8" x 3/4" P.B.H.C.S. w/PATCH	6	6	812052*
	3/8" x 1" P.B.H.C.S. w/PATCH	32	32	812050*
	3/8" x 1 1/2" P.B.H.C.S. w/PATCH	3	3	812053*
	3/8" x 2" P.B.H.C.S. w/PATCH	4	4	812055*
	3/8" x 2 1/2" P.B.H.C.S. w/PATCH	4	4	812057*
	3/8" FLAT WASHER	7	7	817410*
	3/8" FLAT WASHER (1 1/4" O.D.)	38	38	817424*
	3/8" LOCK WASHER	49	49	817334*
	3/8" T-NUT	10	10	804556*
	3/8" HEX NUT	32	32	804053*

Unless Otherwise Specified, All Units of Measure are Each
** Included in Hardware*

Warning: During Installation, Hardware And Small Parts Are Choking Hazards For Young Children. Store Unused Parts Appropriately Until Assembly Is Completed. Once Assembly Is Completed, Remove Any Unused Parts From The Play Environment And Dispose/Save Them In A Secure Location.

Note: Peen Tee-Nuts and Flatwashers to match radius of pipe after assembly is complete.

Note: Loctite (supplied by others) should be used on any non-patch hardware.

DETAILS -for-
3966RP & 3982RP

Important

To Reduce the Risk of Clothing Entanglement in Compliance with ASTM F1487, Any Bolt End Protruding More Than Two Full Threads Beyond the Face of the Nut Shall Be Cut-Off Flush, Filed Smooth and Treated to Prevent Corrosion.

Note: Loctite (Supplied by Others) Should be Used on All Threaded Hardware

Note: After Assembly is Complete, Peen Tee-Nuts and Flatwashers to Match Radius of Pipe.

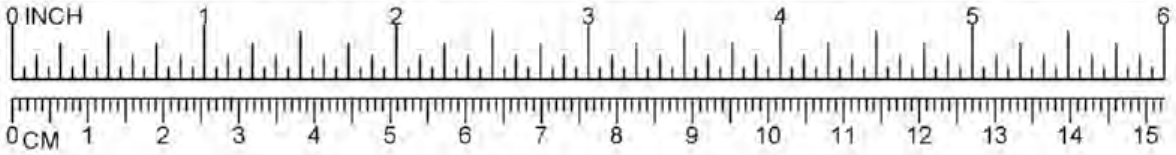

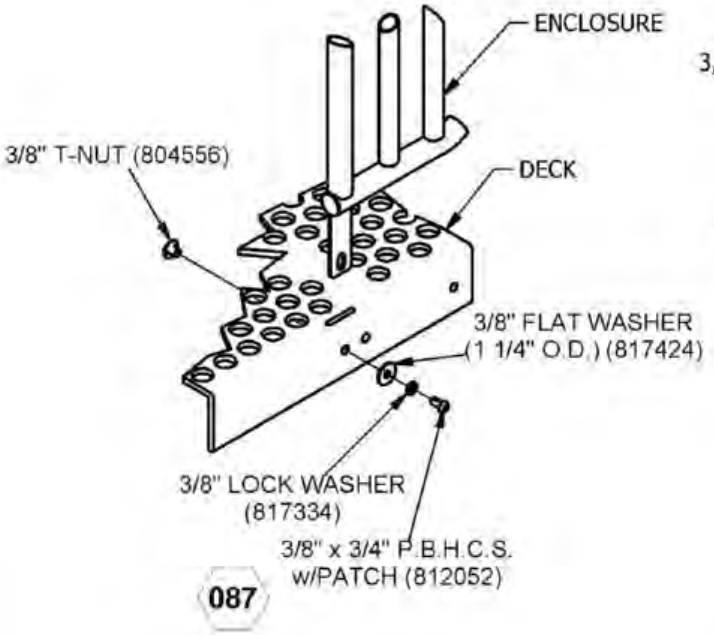

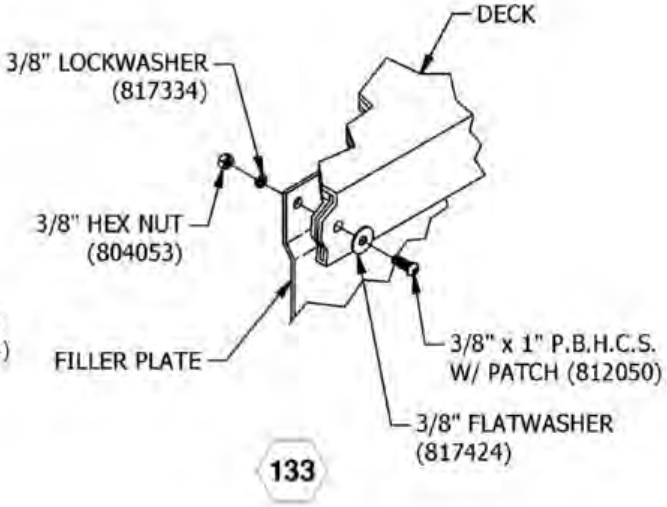

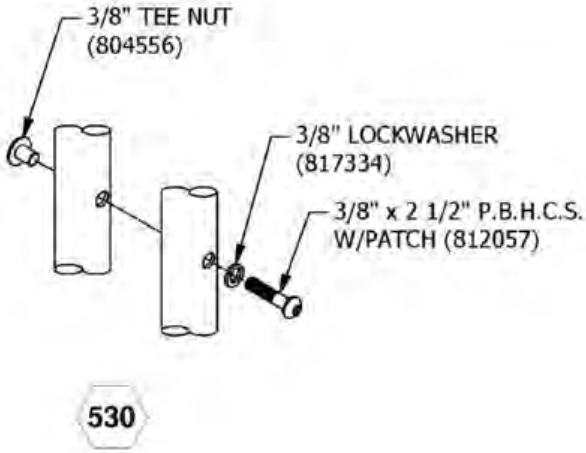

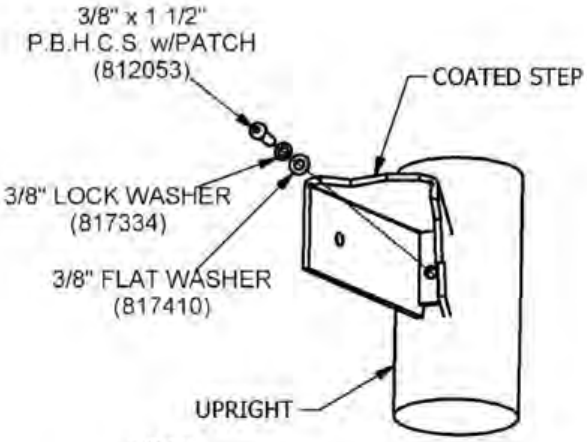

NOTE:
BOLTS SHOULD BE TORQUED FROM 20-25 FT LBS. FOR PROPER INSTALLATION.

NOTE:
AFTER ASSEMBLY IS COMPLETE, PEEN FLATWASHERS TO MATCH RADIUS OF UPRIGHT.

785

DETAILS -for-
3966RP & 3982RP

Important

To Reduce the Risk of Clothing Entanglement in Compliance with ASTM F1487, Any Bolt End Protruding More Than Two Full Threads Beyond the Face of the Nut Shall Be Cut-Off Flush, Filed Smooth and Treated to Prevent Corrosion.

Note: Loctite (Supplied by Others) Should be Used on All Threaded Hardware.

Note: After Assembly is Complete, Peen Tee-Nuts and Flatwashers to Match Radius of Pipe.

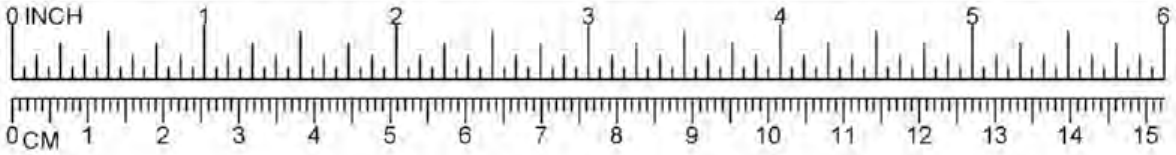

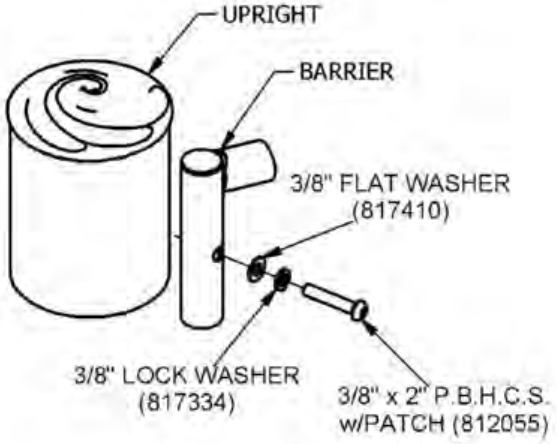

786

PowerScape

GameTime

A PLAYCORE Company

1-800-235-2440

ISSUED/REVISED: 5/7/19

3967RP CITADEL TOWER w/3D PANELS

⬡ = INSTALLATION DETAIL

○ = PARTS LIST REFERENCE

INSTALLATION INSTRUCTIONS

1. Before assembling this equipment, read the enclosed INSTALLATION INSTRUCTIONS in the installation booklet; follow all the instructions during installation.
2. Assemble parts as shown in the ASSEMBLY DRAWING. Refer to the assembly details for the specific hardware required in each connection.

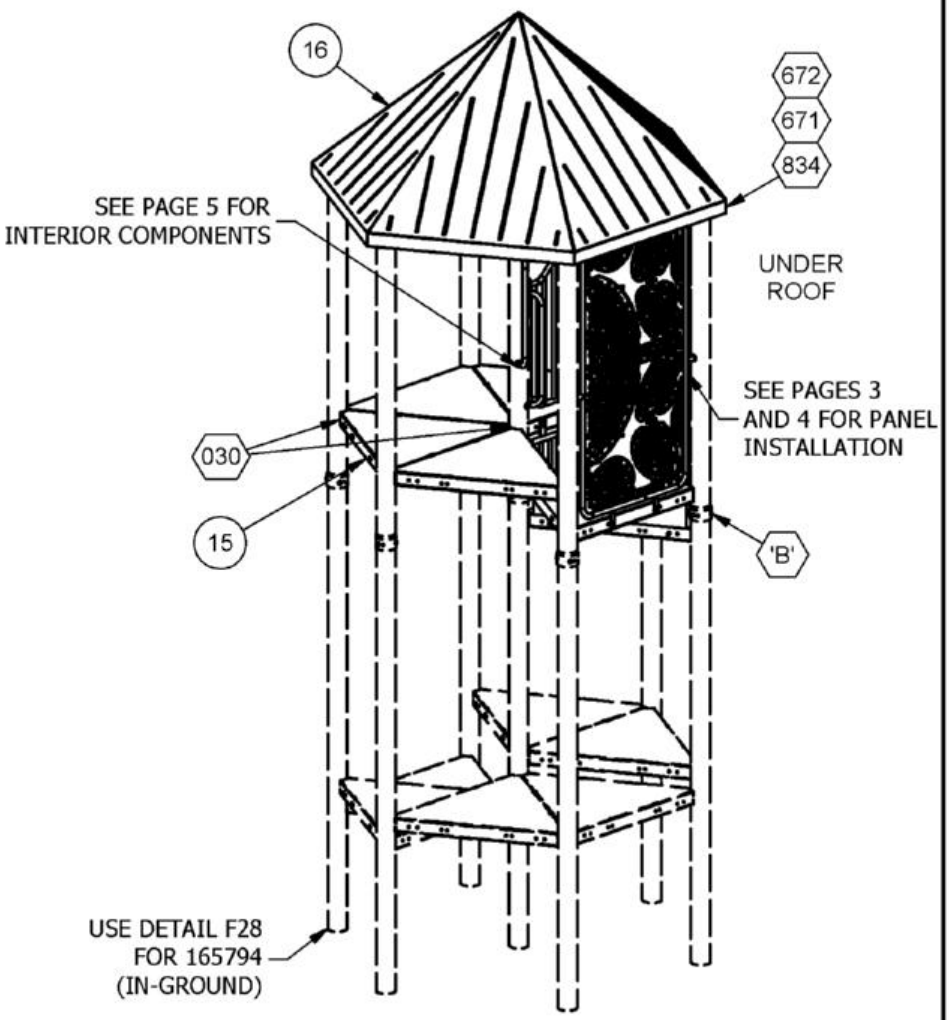

ASSEMBLY DRAWING

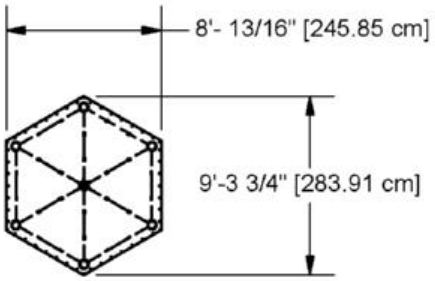

TOP VIEW

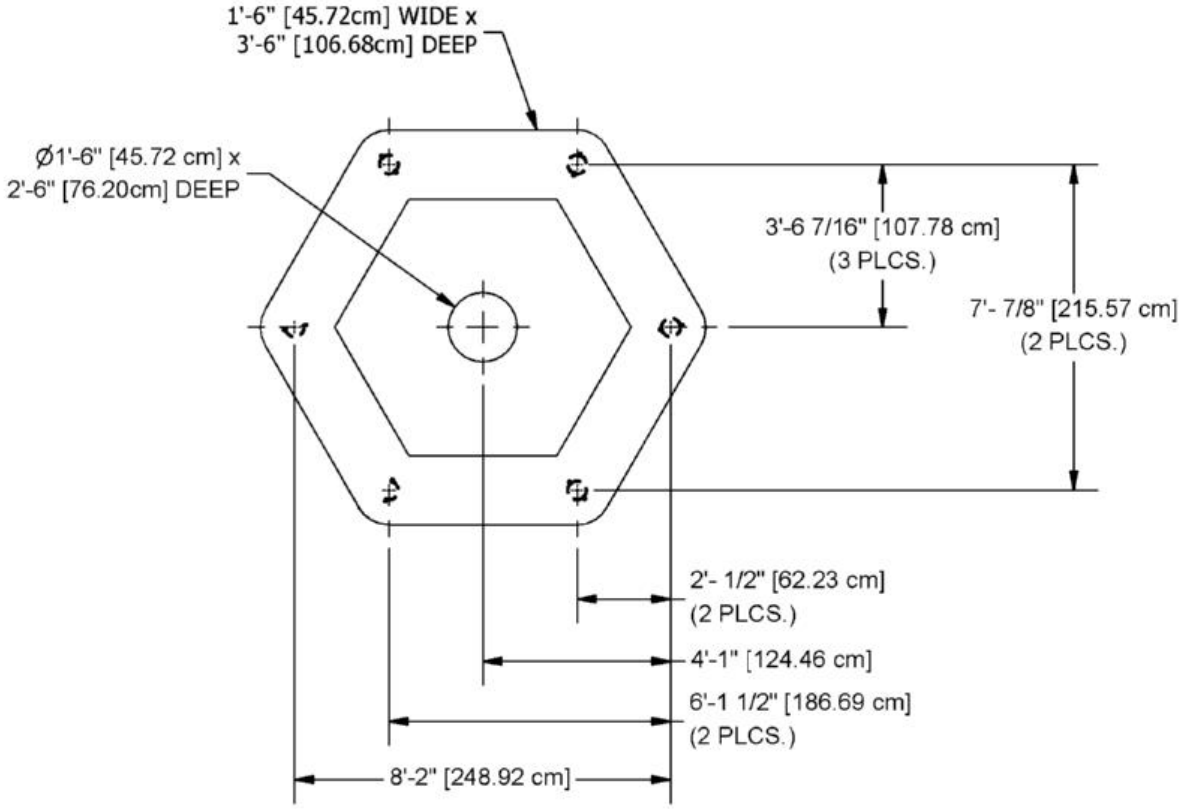

NOTE: HOLE DEPTHS INDICATED ON ALL GROUND PLANS ARE MEASURED FROM THE FINISHED SURFACE. SEE DETAIL 032. ALL FOOTING DIMENSIONS ARE BASED ON LEVEL FINISHED SURFACE.

GROUND PLAN

CONCRETE REQUIRED
2.04 CUBIC YARDS
[1.56 CUBIC METERS]

PowerScape

GameTime

A PLAYCORE Company

1-800-235-2440

ISSUED/REVISED: 9/17/18

3967RP

3D PANELS

= INSTALLATION DETAIL

= PARTS LIST REFERENCE

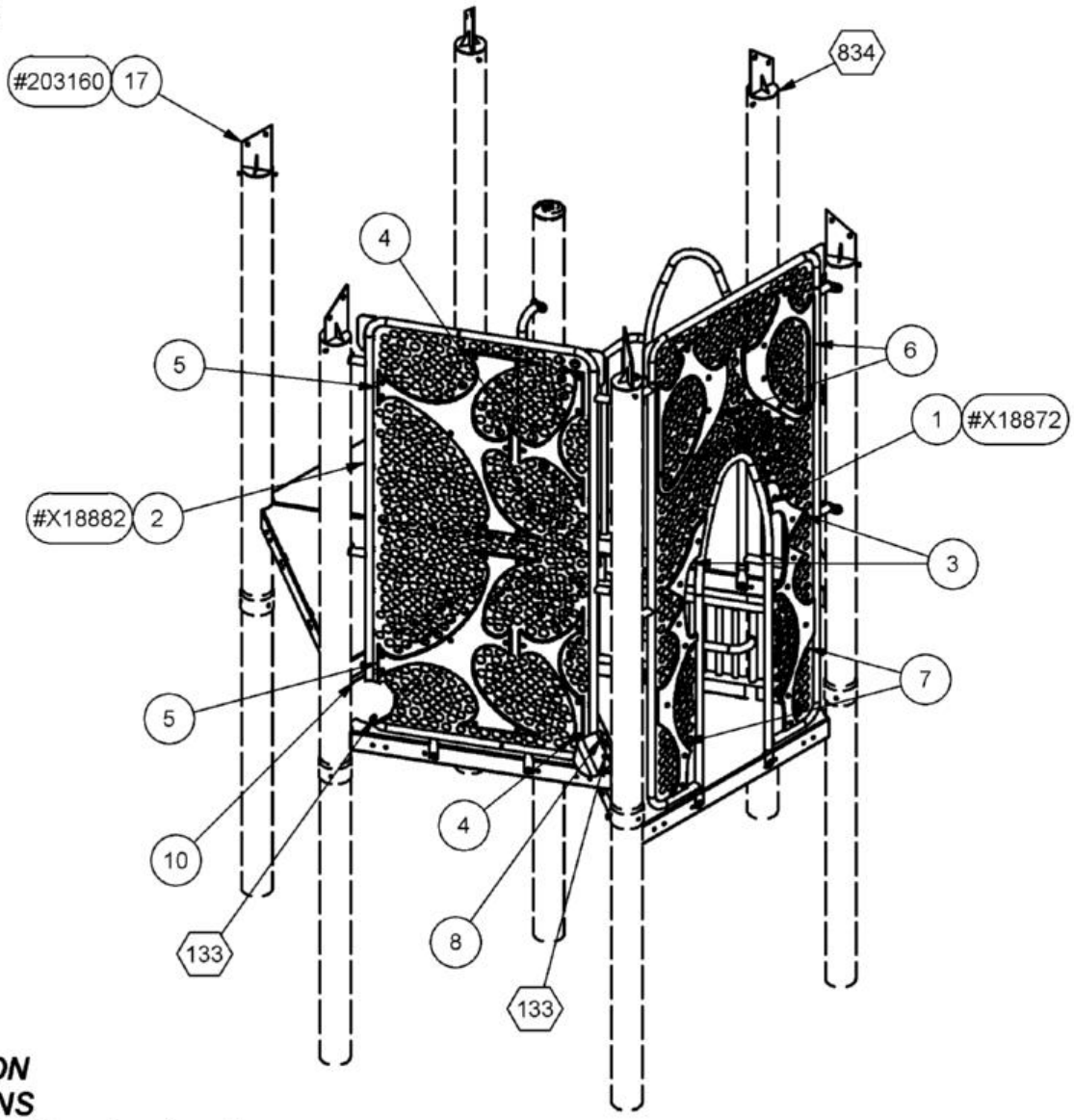

ASSEMBLY DRAWING

INSTALLATION INSTRUCTIONS

1. Before assembling this equipment, read the enclosed INSTALLATION INSTRUCTIONS in the installation booklet; follow all the instructions during installation.
2. Assemble parts as shown in the ASSEMBLY DRAWING. Refer to the assembly details for the specific hardware required in each connection.

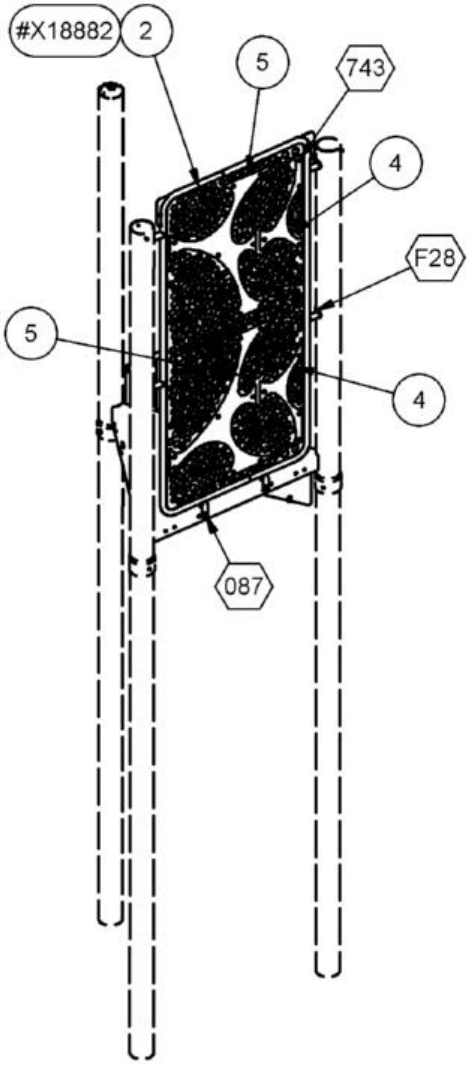

STEP 1

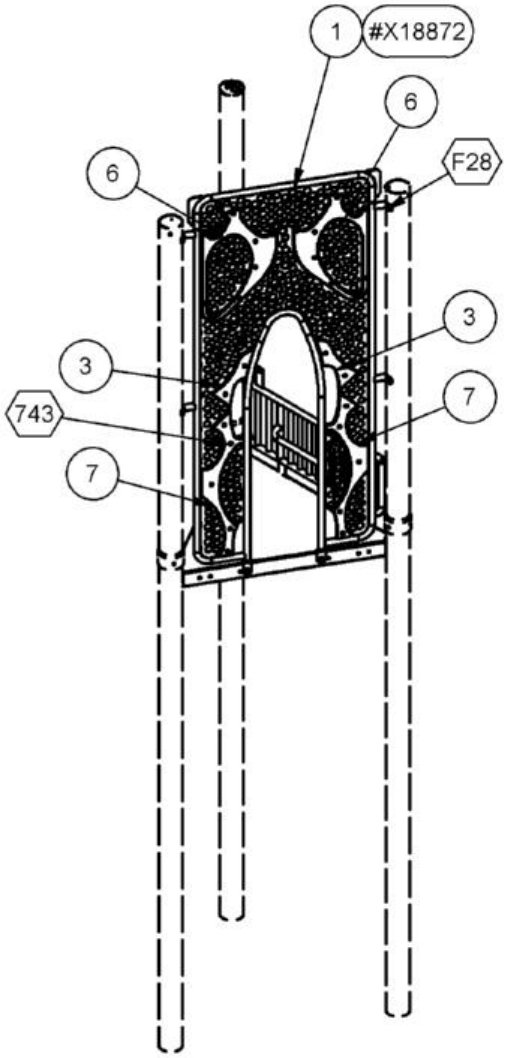

STEP 2

PowerScape

GameTime

A PLAYCORE Company

1-800-235-2440

ISSUED/REVISED: 9/17/18

3967RP ARCHWAY, RUNG & FILLER KICKPLATE & HANDHOLD

⬡ = INSTALLATION DETAIL

◯ = PARTS LIST REFERENCE

INSTALLATION INSTRUCTIONS

1. Before assembling this equipment, read the enclosed INSTALLATION INSTRUCTIONS in the installation booklet; follow all the instructions during installation.
2. Assemble parts as shown in the ASSEMBLY DRAWING. Refer to the assembly details for the specific hardware required in each connection.

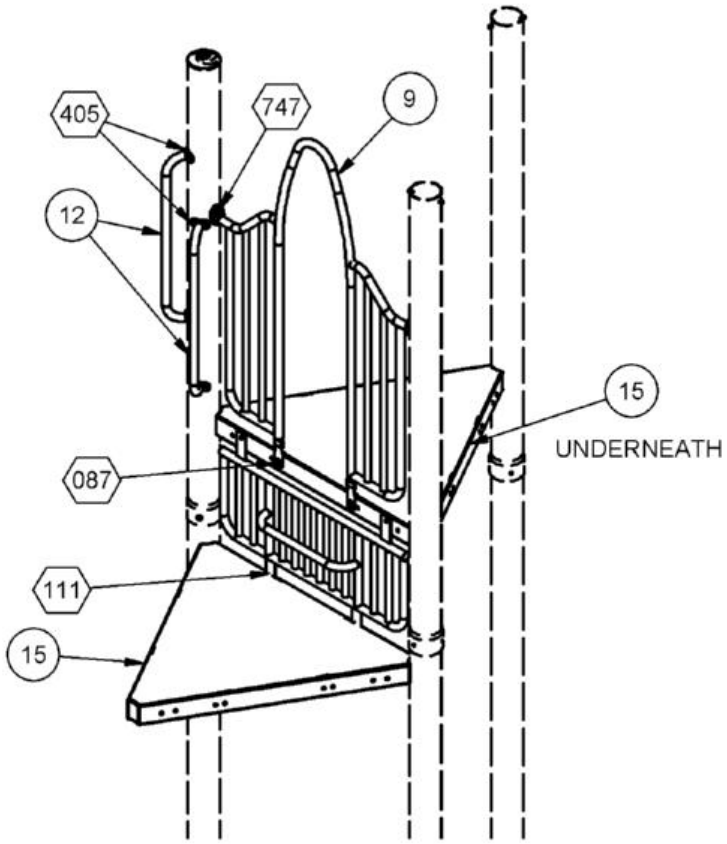

ASSEMBLY DRAWING

Parts List			
REF.	DESCRIPTION	QTY	PART#
1	ARCHWAY PANEL WELD ASS'Y	1	X18872
2	MEDIUM PANEL WELD ASS'Y	1	X18882
3	PANEL TRIM	2	X18895
4	PANEL TRIM SMALL	2	205277
5	PANEL TRIM LARGE	2	205278
6	SHADOW GROVE TRIM SMALL	2	205310
7	ENTRYWAY TRIM	2	205292
8	NARROW KICK PLATE	1	X18005
9	ARCHWAY w/INFILL WELD ASS'Y	1	204183
10	FILLER/KICK PLATE	1	139253
11	CHINNING BAR ASSEMBLY	6	165794
12	HANDHOLD WELD ASSEMBLY	2	177207
13	STEP KICK PLATE WELD ASS'Y	1	205091
15	PUNCHED TRIANGLE DECK	6	163317
16	HEX PANEL WELD ASS'Y	6	203127
17	HEX ROOF UPRIGHT CAP	6	203160
	TRU-LOC	2	A03650
	HARDWARE COMPLETE	1	3967HW
	1/4" CHERRY-MATE RIVET	52	135499*
	1/4" FLAT WASHER (5/8" O.D.)	52	817408*
	3/8" x 3/4" P.B.H.C.S. w/PATCH	46	812052*
	3/8" x 1" P.B.H.C.S. w/PATCH	24	812050*
	3/8" x 1 1/4" P.B.H.C.S. w/PATCH	28	812051*
	3/8" x 1 1/2" P.B.H.C.S. w/PATCH	21	812053*
	3/8" x 1 1/2" P.B.H.C.S.	70	810053*
	3/8" x 2" P.B.H.C.S. w/PATCH	2	812055*
	3/8" FLAT WASHER	119	817410*
	3/8" FLAT WASHER (1 1/4" O.D.)	94	817424*
	3/8" LOCK WASHER	191	817334*
	3/8" HEX NUT	60	804053*
	3/8" T-NUT	10	804556*
	SELF SEALING POP-RIVET	2	140068*
	ALUM. PIN	2	203568*
	1/4-20 x 3/4" SS SELF DRILLING SCREW	12	810072

Unless Otherwise Specified, All Units of Measure are Each
** Included in Hardware*

Warning: During Installation, Hardware And Small Parts Are Choking Hazards For Young Children. Store Unused Parts Appropriately Until Assembly Is Completed. Once Assembly Is Completed, Remove Any Unused Parts From The Play Environment And Dispose/Save Them In A Secure Location.

Note: Peen Tee-Nuts and Flatwashers to match radius of pipe after assembly is complete.

Note: Loctite (supplied by others) should be used on any non-patch hardware.

DETAILS -for-
3967RP

IMPORTANT

TO REDUCE THE RISK OF CLOTHING ENTANGLEMENT IN COMPLIANCE WITH ASTM F1487, ANY BOLT END PROTRUDING MORE THAN TWO FULL THREADS BEYOND THE FACE OF THE NUT SHALL BE CUT-OFF FLUSH, FILED SMOOTH AND TREATED TO PREVENT CORROSION.

NOTE: LOCTITE (SUPPLIED BY OTHERS) SHOULD BE USED ON ALL THREADED HARDWARE.

NOTE: AFTER ASSEMBLY IS COMPLETE, PEEN TEE-NUTS AND FLATWASHERS TO MATCH RADIUS OF PIPE.

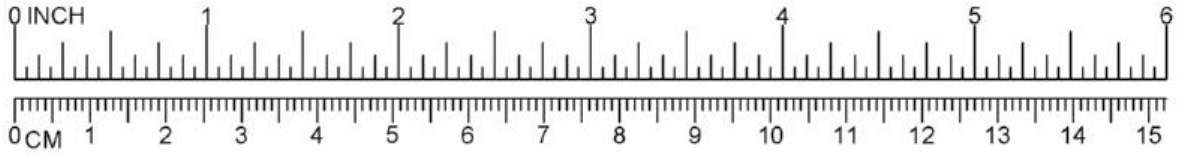

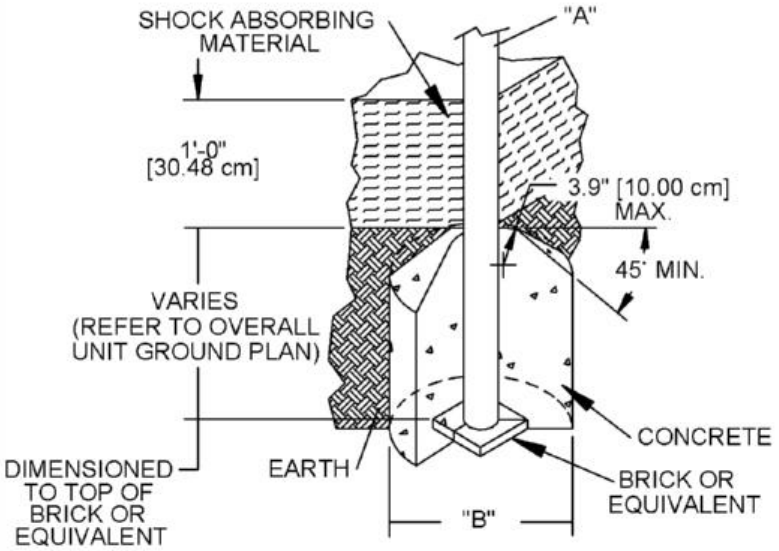

DIA. "A" (PIPE SIZE)	DIA. "B" (FOOTING SIZE)
1 1/16" [2.70 cm]	1'-2" [35.56 cm]
1 5/16" [3.33 cm]	1'-2" [35.56 cm]
1 5/8" [4.13 cm]	1'-2" [35.56 cm]
1 7/8" [4.83 cm]	1'-2" [35.56 cm]
2 3/8" [6.03 cm]	1'-2" [35.56 cm]
3 1/2" [8.89 cm]	1'-6" [45.72 cm]
5" [12.70 cm]	1'-6" [45.72cm]
TRACK RIDE & SWINGS	
5" [12.70 cm]	2'-0" [60.96 cm]
TREE SCAPE	
5" [12.70 cm]	4'-0" [121.92 cm]

NOTES:
- SLOPED FOOTING IS A REQUIREMENT OF EUROPEAN STANDARD EN1176-1 ONLY
- SUGGESTED MINIMUM CONCRETE RATING: 3000 PSI

032

SHOCK ABSORBING PROPERTIES OF SURFACING MATERIALS VARY. IF YOU DETERMINE THAT LESS THAN 1'-0" [30.48cm] OF SURFACING IS REQUIRED, MAKE UP THE DIFFERENCE IN ELEVATION WITH EARTH, BEFORE APPLYING SURFACING.

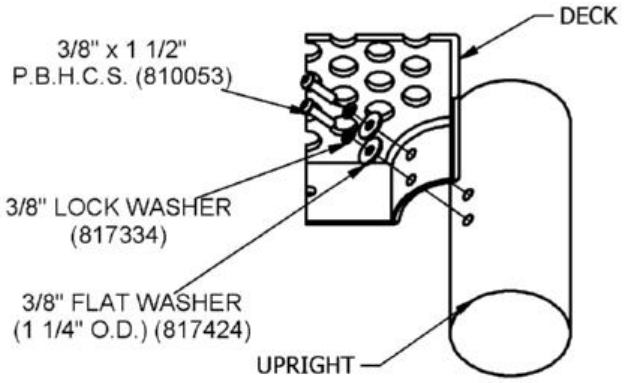

*NOTE:
BOLTS SHOULD BE TORQUED FROM 20-25 FT. LBS. FOR PROPER INSTALLATION.

*NOTE:
AFTER ASSEMBLY IS COMPLETED, PEEN FLATWASHERS TO MATCH RADIUS OF UPRIGHT.

030

DETAILS -for-
3967RP

IMPORTANT

TO REDUCE THE RISK OF CLOTHING ENTANGLEMENT IN COMPLIANCE WITH ASTM F1487, ANY BOLT END PROTRUDING MORE THAN TWO FULL THREADS BEYOND THE FACE OF THE NUT SHALL BE CUT-OFF FLUSH, FILED SMOOTH AND TREATED TO PREVENT CORROSION.

NOTE: LOCTITE (SUPPLIED BY OTHERS) SHOULD BE USED ON ALL THREADED HARDWARE.

NOTE: AFTER ASSEMBLY IS COMPLETE, PEEN TEE-NUTS AND FLATWASHERS TO MATCH RADIUS OF PIPE.

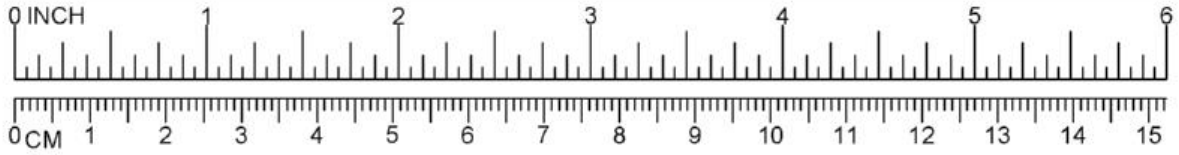

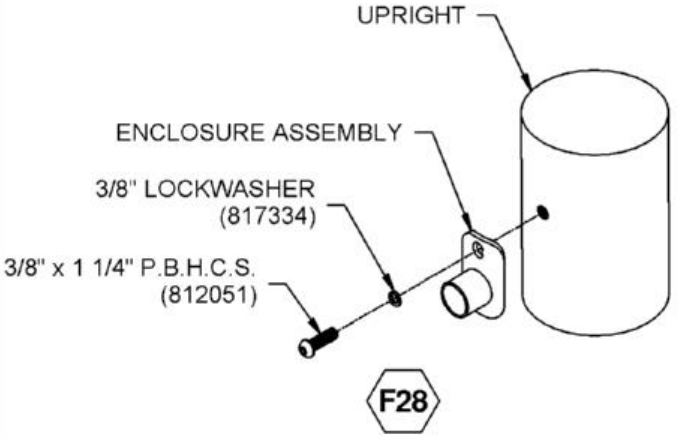

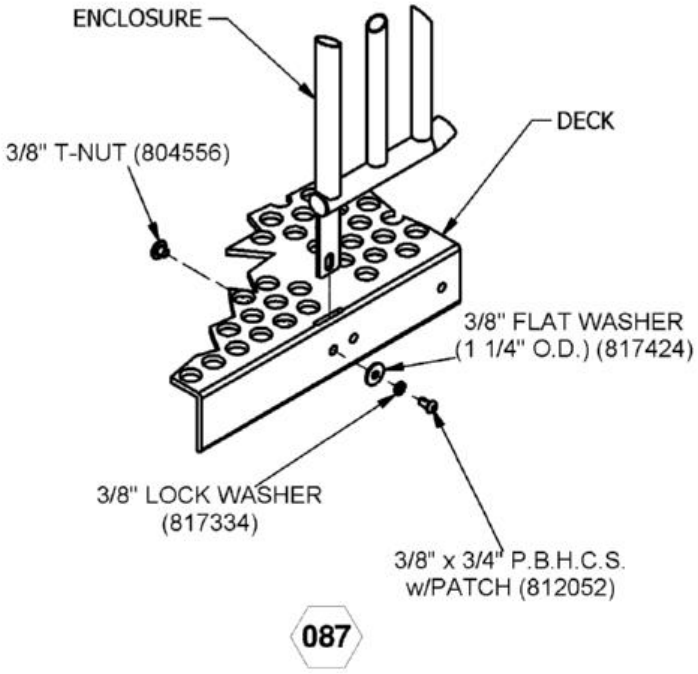

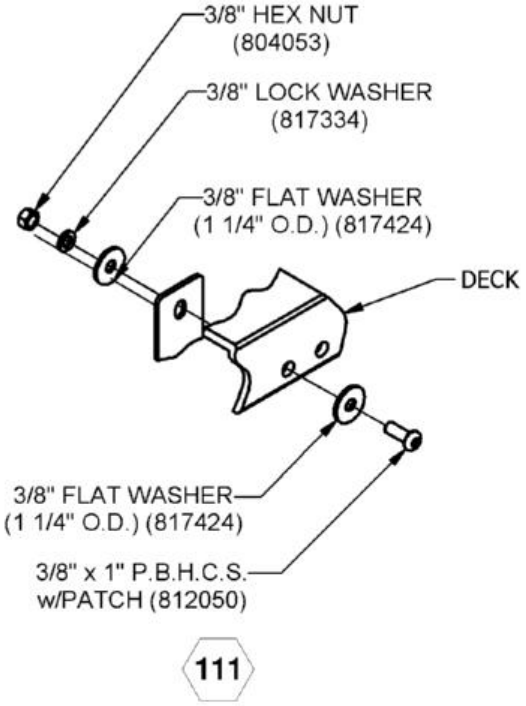

DETAILS -for-
3967RP

IMPORTANT

TO REDUCE THE RISK OF CLOTHING ENTANGLEMENT IN COMPLIANCE WITH ASTM F1487, ANY BOLT END PROTRUDING MORE THAN TWO FULL THREADS BEYOND THE FACE OF THE NUT SHALL BE CUT-OFF FLUSH, FILED SMOOTH AND TREATED TO PREVENT CORROSION.

NOTE: LOCTITE (SUPPLIED BY OTHERS) SHOULD BE USED ON ALL THREADED HARDWARE.

NOTE: AFTER ASSEMBLY IS COMPLETE, PEEN TEE-NUTS AND FLATWASHERS TO MATCH RADIUS OF PIPE.

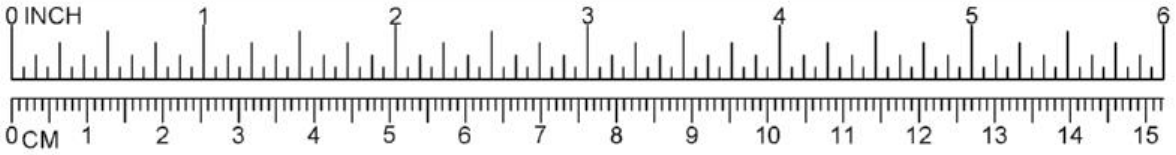

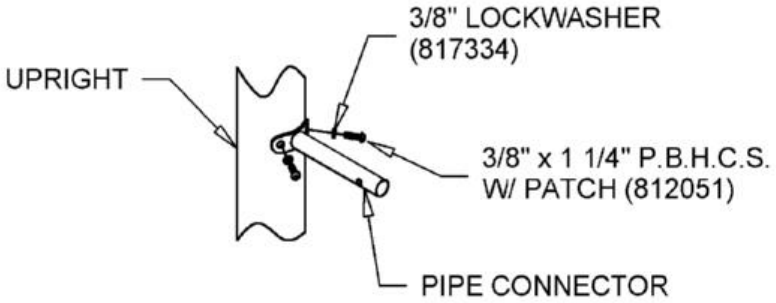

405

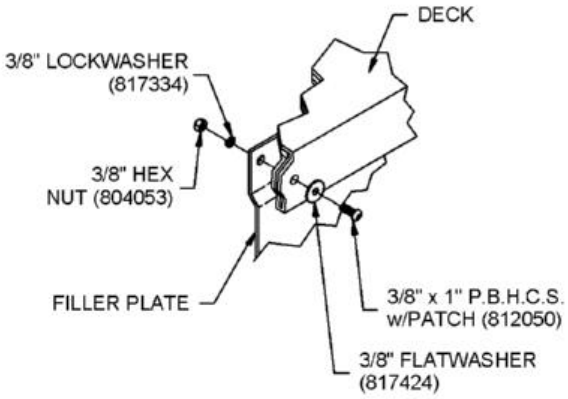

133

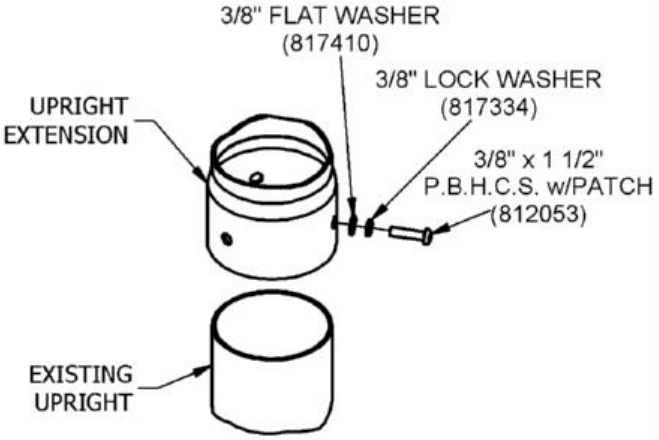

'B'

DETAILS -for-
3967RP

IMPORTANT

TO REDUCE THE RISK OF CLOTHING ENTANGLEMENT IN COMPLIANCE WITH ASTM F1487, ANY BOLT END PROTRUDING MORE THAN TWO FULL THREADS BEYOND THE FACE OF THE NUT SHALL BE CUT-OFF FLUSH, FILED SMOOTH AND TREATED TO PREVENT CORROSION.

NOTE: LOCTITE (SUPPLIED BY OTHERS) SHOULD BE USED ON ALL THREADED HARDWARE.

NOTE: AFTER ASSEMBLY IS COMPLETE, PEEN TEE-NUTS AND FLATWASHERS TO MATCH RADIUS OF PIPE.

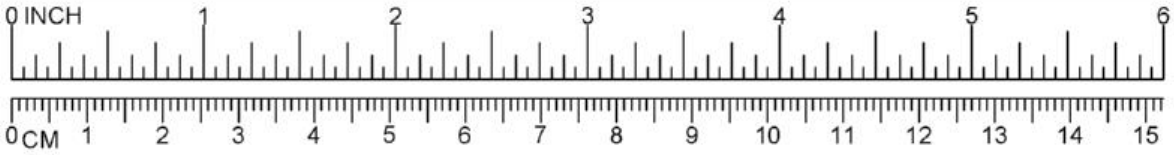

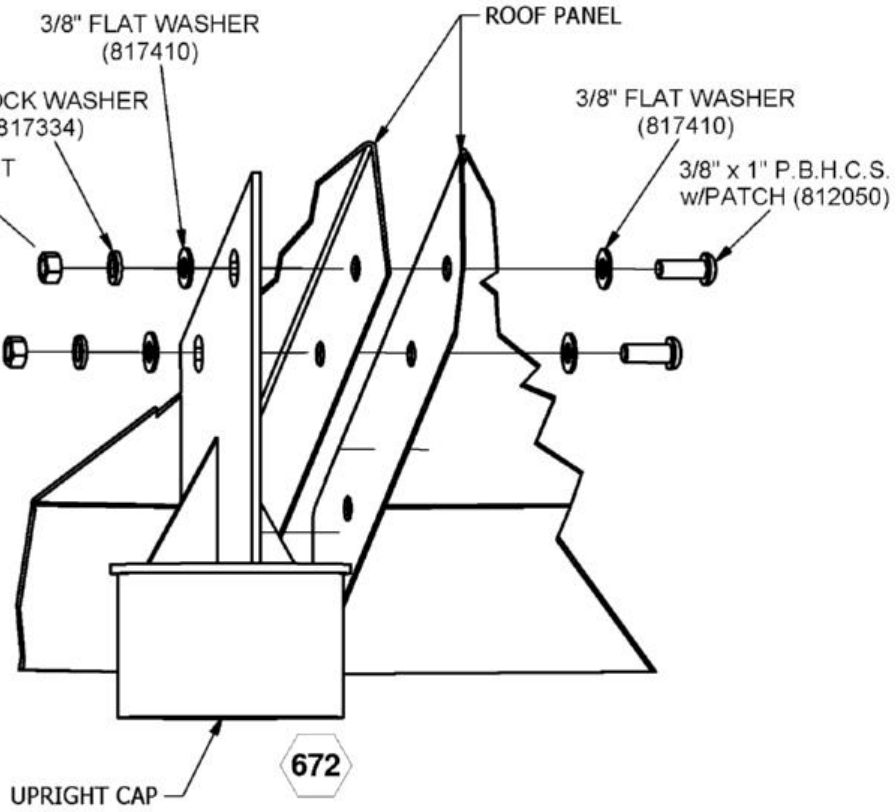

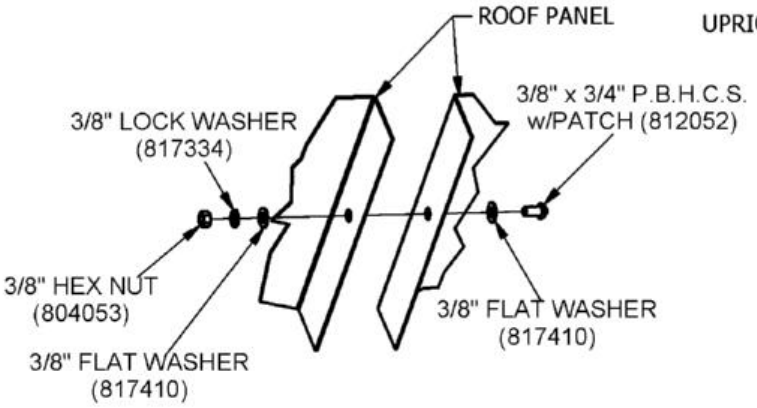

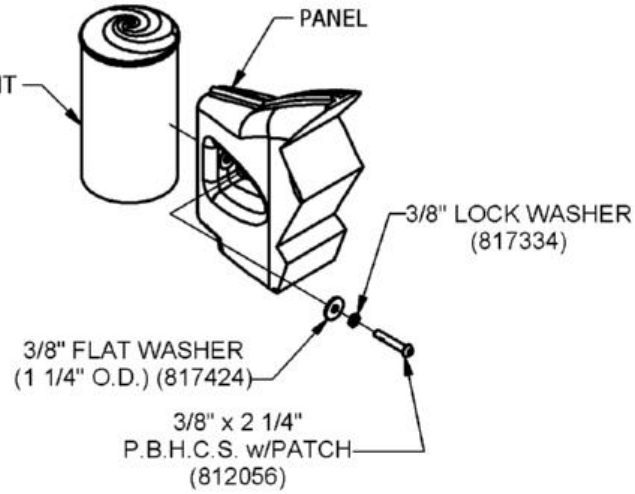

DETAILS -for-
3967RP

IMPORTANT

TO REDUCE THE RISK OF CLOTHING ENTANGLEMENT IN COMPLIANCE WITH ASTM F1487, ANY BOLT END PROTRUDING MORE THAN TWO FULL THREADS BEYOND THE FACE OF THE NUT SHALL BE CUT-OFF FLUSH, FILED SMOOTH AND TREATED TO PREVENT CORROSION.

NOTE: LOCTITE (SUPPLIED BY OTHERS) SHOULD BE USED ON ALL THREADED HARDWARE.

NOTE: AFTER ASSEMBLY IS COMPLETE, PEEN TEE-NUTS AND FLATWASHERS TO MATCH RADIUS OF PIPE.

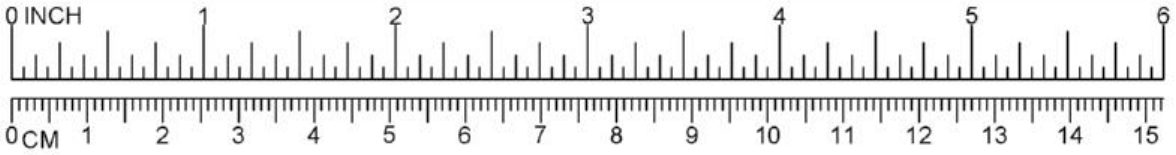

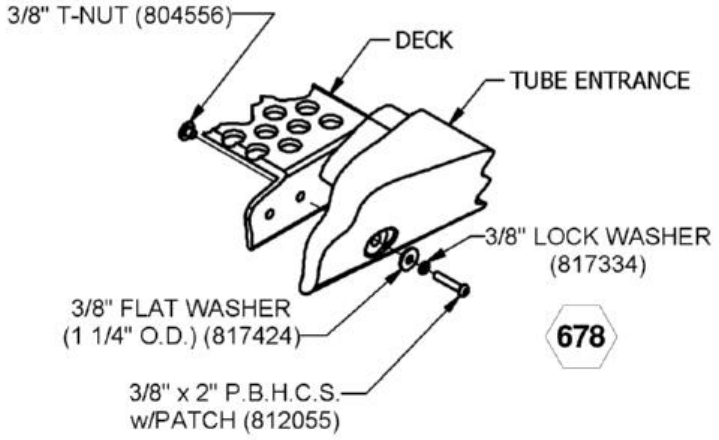

678

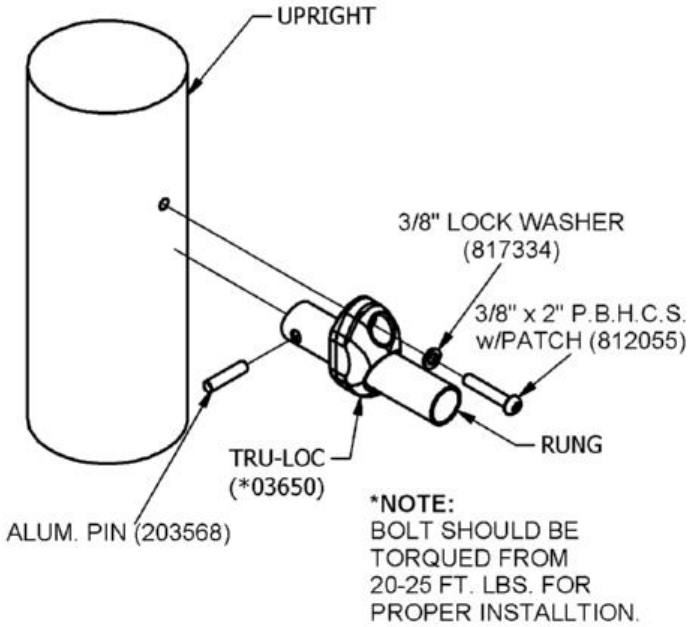

747 (* = A OR Z)

DETAILS -for-
3967RP

IMPORTANT

TO REDUCE THE RISK OF CLOTHING ENTANGLEMENT IN COMPLIANCE WITH ASTM F1487, ANY BOLT END PROTRUDING MORE THAN TWO FULL THREADS BEYOND THE FACE OF THE NUT SHALL BE CUT-OFF FLUSH, FILED SMOOTH AND TREATED TO PREVENT CORROSION.

NOTE: LOCTITE (SUPPLIED BY OTHERS) SHOULD BE USED ON ALL THREADED HARDWARE.

NOTE: AFTER ASSEMBLY IS COMPLETE, PEEN TEE-NUTS AND FLATWASHERS TO MATCH RADIUS OF PIPE.

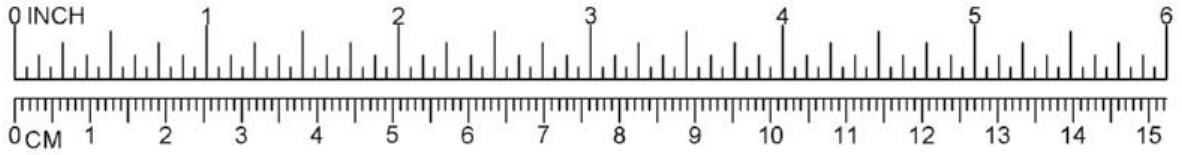

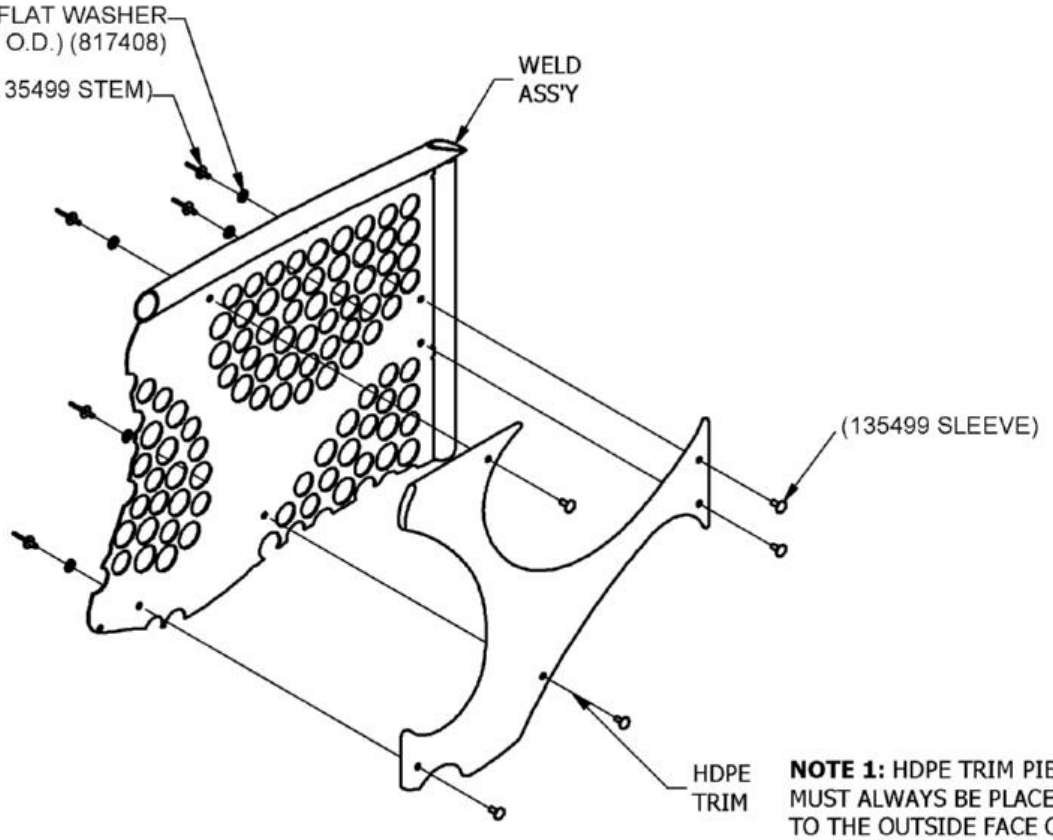

NOTE 1: HDPE TRIM PIECES MUST ALWAYS BE PLACED TO THE OUTSIDE FACE OF THE COMPONENT.

NOTE 2: STEM SIDE OF RIVET MUST ALWAYS BE ON METAL SIDE OF THE COMPONENT. FLUSH SIDE OF RIVET MUST ALWAYS BE ON THE HDPE SIDE OF COMPONENT.

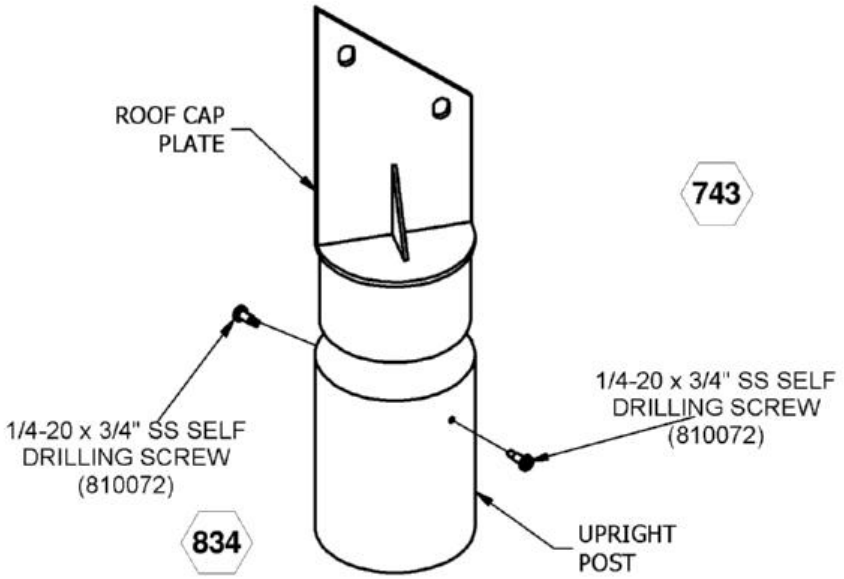

FOOTINGS ORDINATE TABLE			
HOLE	X	Y	DIAG
1	−2’−9 1/2”	−3’−0”	4’−1 1/2”
2	−1’−11 1/2”	−4’−5 1/2”	4’−10 1/2”
3	−1’−5”	3’−2”	3’−6”
4	−0’−6 1/2”	−9’−2 1/2”	9’−3”
5	−0’−3 1/2”	2’−5”	2’−5 1/2”
6	0’−0”	0’−0”	0’−0”
7	0’−0 1/2”	4’−0”	4’−0”
8	0’−3 1/2”	−10’−8”	10’−8”
9	1’−7”	3’−6”	3’−10 1/2”
10	2’−0 1/2”	−3’−6 1/2”	4’−1”
11	3’−3”	−5’−7 1/2”	6’−6”
12	3’−6 1/2”	2’−0 1/2”	4’−1”
13	5’−3 1/2”	−9’−2”	10’−7”
14	5’−4 1/2”	2’−1”	5’−9 1/2”
15	5’−7”	−1’−6”	5’−9 1/2”
16	6’−3”	−15’−4 1/2”	16’−7”
17	6’−6 1/2”	0’−1”	6’−6 1/2”
18	6’−9 1/2”	−3’−7”	7’−8”
19	8’−5”	−9’−0 1/2”	12’−4”
20	8’−10”	−7’−1 1/2”	11’−4”
21	9’−0”	−10’−0 1/2”	13’−6”
22	9’−10”	−16’−7 1/2”	19’−4”
23	9’−10”	5’−10”	11’−5 1/2”
24	10’−10 1/2”	−10’−8”	15’−2 1/2”
25	10’−10 1/2”	−3’−7”	11’−5”
26	11’−1 1/2”	0’−3”	11’−1 1/2”
27	11’−7”	3’−9”	12’−2”
28	12’−10”	−1’−7”	12’−11 1/2”
29	12’−11”	−7’−1 1/2”	14’−9”
30	12’−11”	−12’−8 1/2”	18’−1”
31	13’−7 1/2”	−16’−5”	21’−4”
32	14’−11 1/2”	−10’−8”	18’−4”
33	14’−11 1/2”	−3’−7”	15’−4 1/2”
34	15’−0 1/2”	7’−2”	16’−8”
35	17’−0”	−7’−1 1/2”	18’−5”
36	17’−8 1/2”	−9’−10”	20’−3”
37	19’−11 1/2”	4’−0 1/2”	20’−4 1/2”
38	20’−2”	−9’−3”	22’−2”
39	20’−7”	3’−0”	20’−9 1/2”
40	21’−5”	1’−6 1/2”	21’−5 1/2”
41	22’−0”	0’−6”	22’−0 1/2”
42	22’−10 1/2”	2’−7”	23’−0 1/2”
43	22’−11 1/2”	−11’−4 1/2”	25’−7 1/2”
44	24’−2 1/2”	−16’−1 1/2”	29’−1”
45	25’−4”	2’−5”	25’−5 1/2”
46	25’−8”	−10’−11”	27’−10 1/2”
47	26’−8”	4’−7 1/2”	27’−0 1/2”

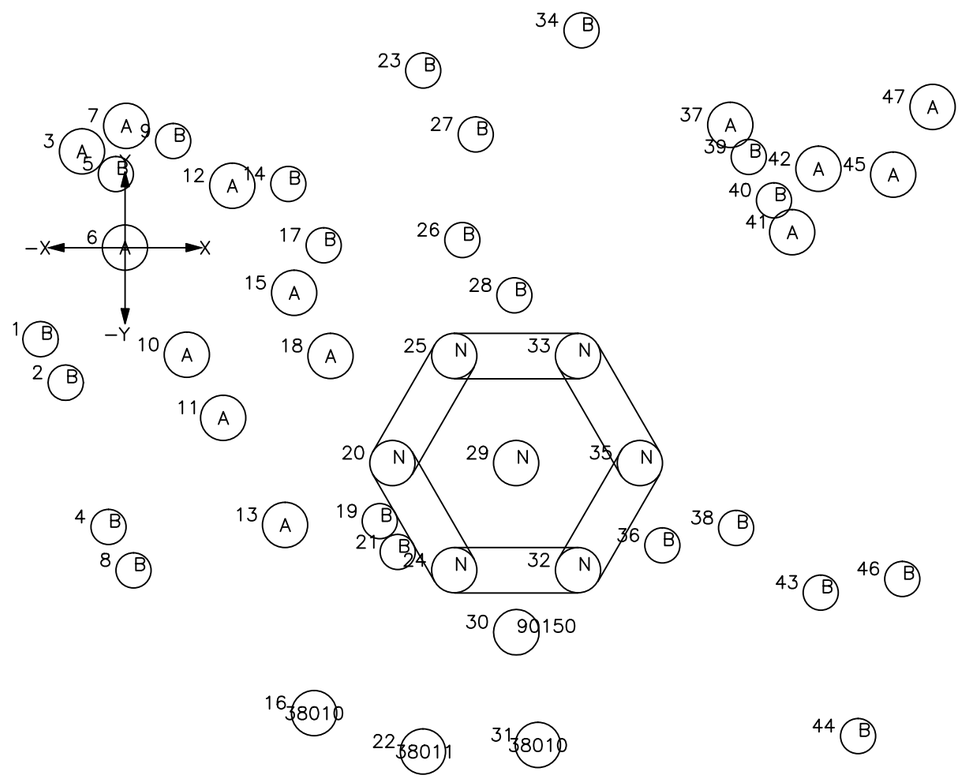

FOOTINGS TABLE			
TYPE	DIAMETER/SIDE	DEPTH*	QTY.
A	1’−6” [45.72cm]	2’−6” [76.20cm]	14
B	1’−2” [35.56cm]	2’−6” [76.20cm]	22
N	1’−6” [45.72cm]	3’−6” [106.68cm]	7
*DEPTH IS MEASURED FROM FINISHED GRADE			

GameTime
A PLAYCORE Company
150 PlayCore Drive SE
Fort Payne, AL 35967
www.gametime.com

ISO 9001 CERTIFIED

ISO 14001 CERTIFIED

9141008

HOFFMAN ESTATES, IL

Representative
CUNNINGHAM RECREATION

Notes:
1. Hole depths indicated on all ground plans are measured from the finished surface. All footing dimensions are based on level finished surface.
2. On non-lettered holes, to ensure concrete requirements please refer to each components installation sheets.

Minimum Area Required:
43'-7" X 39'-4"

Scale: 1" = 5'-0"

This drawing can be scaled only when in an 11" x 17" format

Drawn By:
VW

Date:
05/22/2019

GT Order #:
9141008

05/22/2019 14:34:17 PM

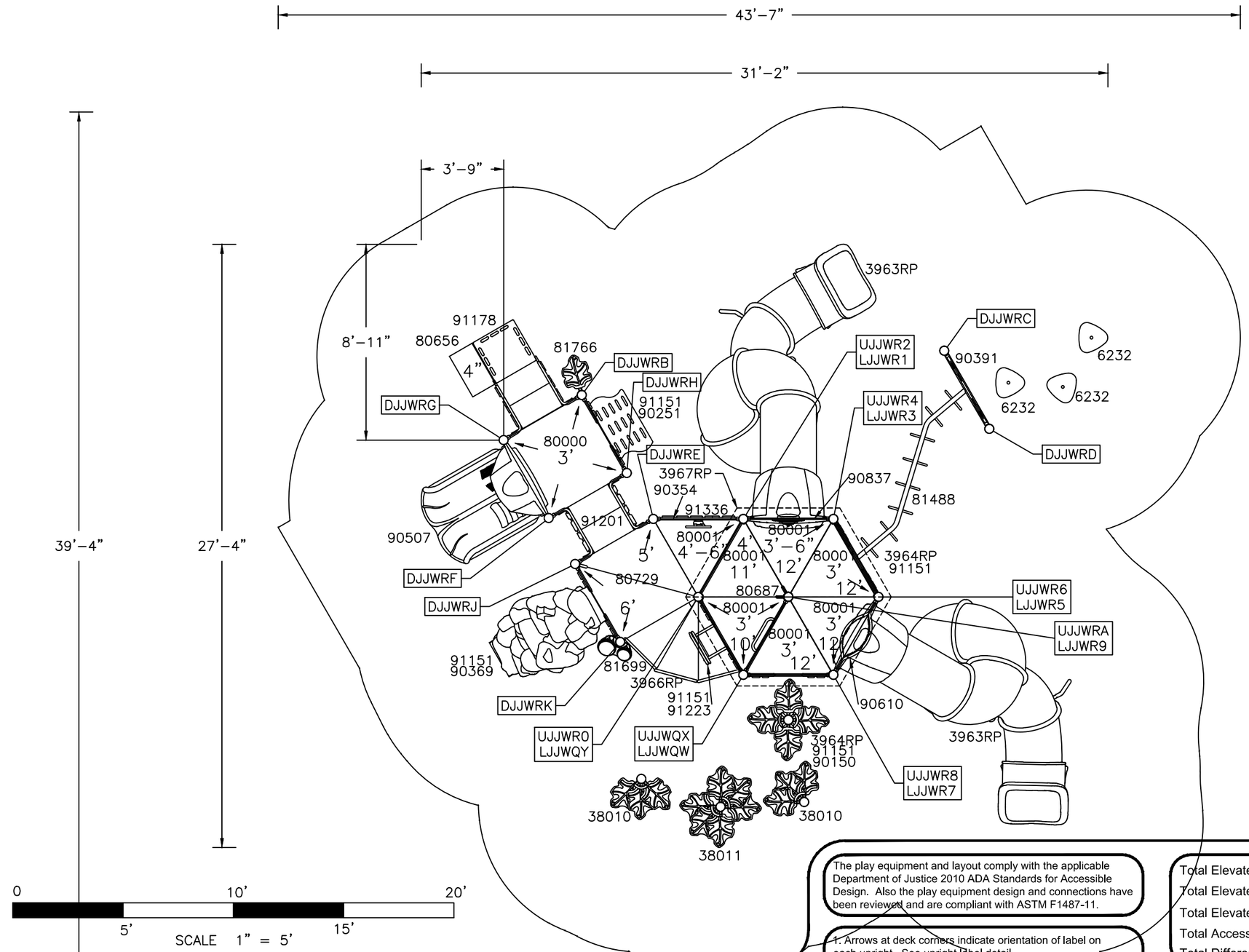

The play equipment and layout comply with the applicable Department of Justice 2010 ADA Standards for Accessible Design. Also the play equipment design and connections have been reviewed and are compliant with ASTM F1487-11.

1. Arrows at deck corners indicate orientation of label on each upright. See upright label detail.
2. Owner/operator shall install and maintain protective surfacing within the use zone (U.S.) or protective surfacing zone (Canada) of all play equipment to comply with ASTM F1292, F1951, F2075, F2223, F2479, and F1487 (U.S.) or CAN/CSA Z614 (Canada).
3. Larger overall dimensions shown represent ASTM use zone and CSA protective surfacing zone. For Canadian installations only, an additional 1.8m long no-encroachment zone is required beyond the protective surfacing zone of slides, track rides and other play equipment causing the user to be propelled forward.

Total Elevated Play Components	11	
Total Elevated Play Components Accessible By Ramp	0	Requ
Total Elevated Components Accessible By Transfer	8	Requ
Total Accessible Ground Level Components Shown	8	Requ
Total Different Types Of Ground Level Components	4	Requ

GameTime
A PLAYCORE Company
150 PlayCore Drive SE
Fort Payne, AL 35967
www.gametime.com

ISO 9001 CERTIFIED

ISO 14001 CERTIFIED

9141008

HOFFMAN ESTATES, IL

Representative
CUNNINGHAM RECREATION

This play equipment is recommended for children ages 5-12

Minimum Area Required:
43'-7" X 39'-4"

Scale: 1" = 5'-0"

This drawing can be scaled only when in an 11" x 17" format

Drawn By:
VW

Date:
05/22/2019

GT Order #:
9141008

05/22/2019 14:34:17 PM

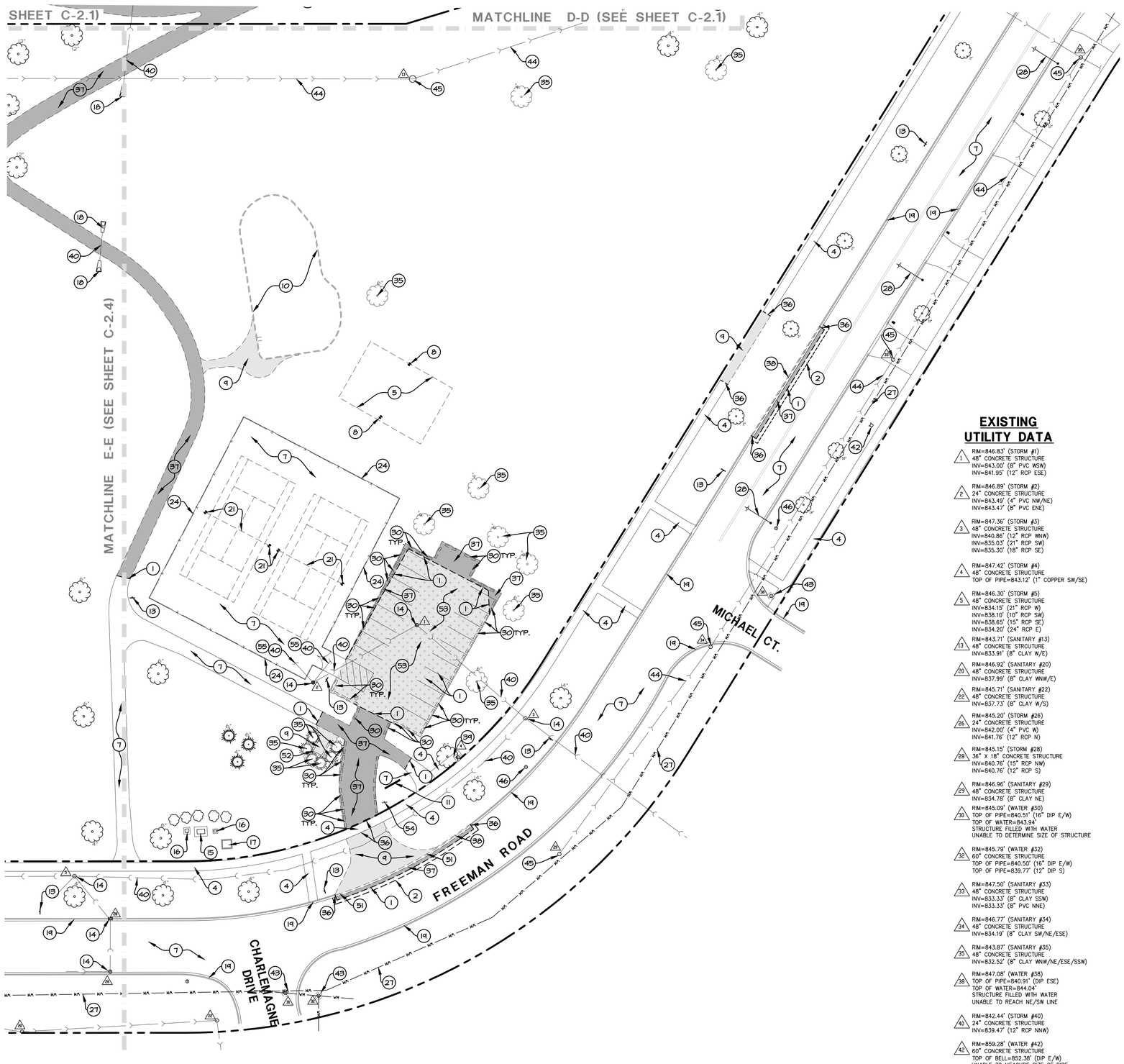

EXISTING UTILITY DATA

1. RIM=846.83' (STORM #1)
48" CONCRETE STRUCTURE
INV=843.00' (8" PVC WSW)
INV=841.95' (12" RCP ESE)

2. RIM=846.89' (STORM #2)
24" CONCRETE STRUCTURE
INV=843.49' (4" PVC NW/NE)
INV=843.47' (8" PVC ENE)

3. RIM=847.36' (STORM #3)
48" CONCRETE STRUCTURE
INV=840.86' (12" RCP WNW)
INV=835.03' (21" RCP SW)
INV=835.30' (18" RCP SE)

4. RIM=847.42' (STORM #4)
48" CONCRETE STRUCTURE
TOP OF PIPE=843.12' (1" COPPER SW/SE)

5. RIM=846.30' (STORM #5)
48" CONCRETE STRUCTURE
INV=834.15' (21" RCP W)
INV=838.10' (10" RCP SW)
INV=838.65' (15" RCP SE)
INV=834.20' (24" RCP E)

13. RIM=843.71' (SANITARY #13)
48" CONCRETE STRCUTURE
INV=833.91' (8" CLAY W/E)

20. RIM=846.92' (SANITARY #20)
48" CONCRETE STRUCTURE
INV=837.99' (8" CLAY WNW/E)

22. RIM=845.71' (SANITARY #22)
48" CONCRETE STRUCTURE
INV=837.73' (8" CLAY W/S)

26. RIM=845.20' (STORM #26)
24" CONCRETE STRUCTURE
INV=842.00' (4" PVC W)
INV=841.76' (12" RCP N)

28. RIM=845.15' (STORM #28)
36" X 18" CONCRETE STRUCTURE
INV=840.76' (15" RCP NW)
INV=840.76' (12" RCP S)

29. RIM=846.96' (SANITARY #29)
48" CONCRETE STRUCTURE
INV=834.78' (8" CLAY NE)

30. RIM=845.09' (WATER #30)
TOP OF PIPE=840.51' (16" DIP E/W)
TOP OF WATER=843.94'
STRUCTURE FILLED WITH WATER
UNABLE TO DETERMINE SIZE OF STRUCTURE

32. RIM=845.79' (WATER #32)
60" CONCRETE STRUCTURE
TOP OF PIPE=840.50' (16" DIP E/W)
TOP OF PIPE=839.77' (12" DIP S)

33. RIM=847.50' (SANITARY #33)
48" CONCRETE STRUCTURE
INV=833.33' (8" CLAY SSW)
INV=833.33' (8" PVC NNE)

34. RIM=846.77' (SANITARY #34)
48" CONCRETE STRUCTURE
INV=834.19' (8" CLAY SW/NE/ESE)

35. RIM=843.87' (SANITARY #35)
48" CONCRETE STRUCTURE
INV=832.52' (8" CLAY WNW/NE/ESE/SSW)

38. RIM=847.08' (WATER #38)
TOP OF PIPE=840.91' (DIP ESE)
TOP OF WATER=844.04'
STRUCTURE FILLED WITH WATER
UNABLE TO REACH NE/SW LINE

40. RIM=842.44' (STORM #40)
24" CONCRETE STRUCTURE
INV=839.47' (12" RCP NNW)

42. RIM=859.28' (WATER #42)
60" CONCRETE STRUCTURE
TOP OF BELL=852.38' (DIP E/W)
UNABLE TO MEASURE SIZE OF PIPE

PROJECT NOTES:

1. NEW FULL DEPTH SAWCUT OF EXISTING ASPHALT PAVEMENT TO PROVIDE CLEAN CONSTRUCTION BREAK.
2. NEW 2' BUTT JOINT.
3. EXISTING PAVEMENT STRIPING TO REMAIN.
4. EXISTING CONCRETE SIDEWALK TO REMAIN.
5. EXISTING SAND VOLLEYBALL COURT TO BE REMOVED FULL DEPTH.
6. EXISTING CONCRETE PAVEMENT TO REMAIN.
7. EXISTING ASPHALT PAVEMENT TO REMAIN.
8. EXISTING VOLLEYBALL COURT POST AND NET TO BE REMOVED.
9. EXISTING CONCRETE TO BE REMOVED FULL DEPTH TO MEET THE BOTTOM OF THE PROPOSED PAVEMENT CROSS SECTIONS (PROPOSED SUBGRADE ELEVATION). SEE THE SITE DEVELOPMENT PLAN FOR THE PROPOSED PAVEMENT CROSS SECTIONS AND THE SITE GRADING PLAN FOR THE PROPOSED FINISHED GRADES. ADD #1
10. ~~EXISTING PLAYGROUND EQUIPMENT, FOUNDATIONS, MULCH, EDGING, ETC. TO BE REMOVED.~~
11. EXISTING I.D. SIGN TO BE REMOVED AND SALVAGED.
12. EXISTING CONCRETE WALL TO REMAIN.
13. EXISTING SIGN TO REMAIN.
14. EXISTING STORM STRUCTURE TO REMAIN.
15. EXISTING GENERATOR TO REMAIN.
16. EXISTING ELECTRIC METER TO REMAIN.
17. EXISTING TRANSFORMER TO REMAIN.
18. EXISTING FLARED END SECTION TO REMAIN.
19. EXISTING CURB AND GUTTER TO REMAIN.
20. EXISTING DEPRESSED CURB AND GUTTER TO REMAIN.
21. EXISTING TENNIS COURT POST AND NET TO REMAIN.
22. NEW FULL DEPTH SAWCUT OF EXISTING CONCRETE TO PROVIDE CLEAN CONSTRUCTION BREAK AT NEAREST JOINT.
23. EXISTING BENCH ON CONCRETE PAD TO REMAIN.
24. EXISTING FENCE TO REMAIN. PROTECT DURING CONSTRUCTION.
25. EXISTING ASPHALT TRAIL TO REMAIN.
26. EXISTING BASKETBALL COURT TO REMAIN.
27. EXISTING WATERMAIN PER VILLAGE RECORDS TO REMAIN.
28. EXISTING STREET LIGHT TO REMAIN.
29. EXISTING PLAYGROUND TO REMAIN.
30. EXISTING WHEELSTOPS TO BE REMOVED AND SALVAGED.
31. EXISTING BUILDING TO REMAIN.
32. EXISTING TRASH CAN ON CONCRETE PAD TO REMAIN.
33. EXISTING BRIDGE TO REMAIN.
34. EXISTING BLOCK WALL TO REMAIN.
35. EXISTING TREE TO BE REMOVED.
36. NEW FULL DEPTH SAWCUT OF EXISTING CONCRETE TO PROVIDE CLEAN CONSTRUCTION BREAK.
37. EXISTING ASPHALT PAVEMENT TO BE REMOVED FULL DEPTH TO MEET THE BOTTOM OF THE PROPOSED PAVEMENT CROSS SECTIONS (PROPOSED SUBGRADE ELEVATION). SEE THE SITE DEVELOPMENT PLAN FOR THE PROPOSED PAVEMENT CROSS SECTIONS AND THE SITE GRADING PLAN FOR THE PROPOSED FINISHED GRADES.
38. EXISTING CURB AND GUTTER TO BE REMOVED.
39. EXISTING DRINKING FOUNTAIN TO REMAIN.
40. EXISTING STORM SEWER TO REMAIN.
41. EXISTING WHEELSTOPS TO REMAIN.
42. EXISTING FIRE HYDRANT TO REMAIN.
43. EXISTING VALVE VAULT TO REMAIN.
44. EXISTING SANITARY SEWER TO REMAIN.
45. EXISTING SANITARY STRUCTURE TO REMAIN.
46. EXISTING TELCO PEDISTAL TO REMAIN.
47. EXISTING FLARED END SECTION TO BE REMOVED AND SALVAGED.
48. EXISTING OUTLET CONTROL STRUCTURE AND OVERFLOW WEIR TO REMAIN.
49. EXISTING WOOD DOCK TO REMAIN.
50. EXISTING ADA PARKING STALL TO BE REMOVED AND SALVAGED.
51. EXISTING DEPRESSED CURB AND GUTTER TO BE REMOVED.
52. EXISTING WOOD FENCE TO BE REMOVED.
53. EXISTING ASPHALT PAVEMENT TO BE MILLED TO A DEPTH OF 1.75".
54. EXISTING SIGN TO BE REMOVED.
55. CONTRACTOR SHALL TRACE UTILITY ROUTING PRIOR TO CONSTRUCTION. NOTIFY ENGINEER IMMEDIATELY IF CONFLICTS EXIST.

HATCH LEGEND

- EXISTING CONCRETE PAVEMENT TO BE REMOVED FULL DEPTH
- EXISTING ASPHALT PAVEMENT TO BE REMOVED FULL DEPTH
- EXISTING ASPHALT PAVEMENT TO BE MILLED TO A DEPTH OF 1.75"

DEMOLITION LEGEND

- EXISTING MANHOLE
- EXISTING WATER STRUCTURE
- EXISTING B-BOX
- EXISTING STREET LIGHT
- EXISTING FIRE HYDRANT
- EXISTING UTILITY POLE
- EXISTING SIGN
- EXISTING FLARED END SECTION
- EXISTING TREE
- EXISTING SANITARY SEWER
- EXISTING STORM SEWER
- EXISTING WATER MAIN
- EXISTING TELCO PEDESTAL
- EXISTING FIRE HYDRANT
- EXISTING VALVE WITH VAULT
- WETLAND BOUNDARY
- NORMAL WATER LEVEL

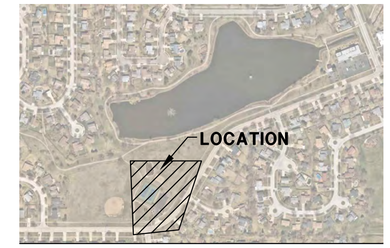

KEYMAP

SCALE: N.T.S.

NORTH

SITE DEMOLITION NOTES:

A. CONTRACTOR SHALL PERFORM ALL DEMOLITION WORK IN ACCORDANCE WITH ALL APPLICABLE FEDERAL, STATE, AND LOCAL REQUIREMENTS.
B. THE CONTRACTOR SHALL OBTAIN ALL NECESSARY DEMOLITION PERMITS AND COORDINATE ALL DEMOLITION WITH THE MUNICIPALITY AND OWNERS REPRESENTATIVE TO ENSURE PROTECTION AND MAINTENANCE OF SANITARY AND WATER UTILITIES AS NECESSARY AND TO PROVIDE STORM WATER CONVEYANCE UNTIL NEW FACILITIES ARE CONSTRUCTED, TESTED, AND PLACED IN OPERATION.
C. CONTRACTOR SHALL DEVELOP AND IMPLEMENT A DAILY PROGRAM OF DUST CONTROL PROCEDURES PRIOR TO DEMOLITION OF ANY STRUCTURES. MODIFICATION OF DUST CONTROL PROCEDURES SHALL BE PERFORMED BY THE CONTRACTOR TO THE SATISFACTION OF THE MUNICIPALITY AND COMPLY WITH THE NPDES II REQUIREMENTS OF THE ILLINOIS ENVIRONMENTAL PROTECTION AGENCY AND THE INDIVIDUAL STORM WATER POLLUTION PREVENTION PLAN FOR THIS PROJECT.
D. ALL EXISTING TREES, BRUSH AND MISCELLANEOUS VEGETATION TO BE REMOVED OR DEMOLISHED SHALL BE REMOVED FROM THE SITE AND LEGALLY DISPOSED OF BY THE CONTRACTOR.
E. VOIDS LEFT BY ANY ITEM REMOVED UNDER ANY PROPOSED BUILDING, PAVEMENT, OR WALK OR WITHIN 24" THEREOF SHALL BE BACKFILLED WITH ENGINEERED FILL ACCORDING TO THE GEOTECHNICAL REPORT.
F. ALL EXISTING BUILDINGS, FOUNDATIONS, CONCRETE OR ASPHALT PAVEMENT OR WALKS, CURB AND GUTTER AND MISCELLANEOUS STRUCTURES (INCLUDING, BUT NOT LIMITED TO FENCES, POLES, YARD LIGHTS, ELECTRICAL PANELS, AND MISCELLANEOUS DEBRIS) INDICATED TO BE DEMOLISHED SHALL BE REMOVED OR DEMOLISHED AND REMOVED FROM THE SITE AND DISPOSED OF LEGALLY BY THE CONTRACTOR.
G. CONTACT GAS COMPANY PRIOR TO DEMOLITION. LOCATION OF EXISTING GAS SERVICES ARE UNKNOWN.
H. ALL EXISTING TREES SHALL REMAIN UNLESS OTHERWISE NOTED.
I. ALL EXISTING UTILITIES SHALL REMAIN UNLESS OTHERWISE NOTED.
J. CONTRACTOR SHALL HIRE A PRIVATE UTILITY LOCATOR TO LOCATE UTILITIES PRIOR TO CONSTRUCTION AND SHALL CONTACT THE SITE ENGINEER IF A CONFLICT EXISTS.
K. CONTRACTOR SHALL PROVIDE REMOVAL AND REPLACEMENT AND SHORING AS NECESSARY TO MEET OSHA AND LOCAL CODE, AS WELL AS MANUFACTURER'S REQUIREMENTS.
L. ALL FOUNDATIONS FOR ALL FENCES, SIGNS, ETC. NOTED FOR REMOVAL SHALL BE REMOVED AND LEGALLY DISPOSED OF OFFSITE.
M. PROOF-ROLLING SHALL BE PERFORMED FOR ALL SUBGRADE PRIOR TO CONSTRUCTION OF NEW PAVEMENT. ALL SUBGRADE PROOF-ROLLING SHALL BE WITNESSED AND APPROVED BY A MATERIALS TESTING AGENCY TO BE HIRED BY THE OWNER. CONTRACTOR TO COORDINATE ALL PROOF-ROLLING WITH THE MATERIALS TESTING AGENCY. CONTACT THE ENGINEER AND MATERIAL TESTING AGENCY SO THAT THEY MAY WITNESS THE PROOF ROLL. PROOF ROLL SHALL BE PROVIDED FOR ALL PAVEMENT AREAS SPECIFIED FOR FULL DEPTH REMOVAL AND REPLACEMENT.
N. EXISTING CONDITIONS AND TOPOGRAPHY SHOWN REPRESENTS SITE CONDITIONS PER THE PLAT OF SURVEY LAST DATED 6-16-2004, PREPARED BY ENGINEERING RESOURCE ASSOCIATES INC. CONTRACTOR SHALL FIELD VERIFY EXISTING ELEVATIONS AND CONDITIONS (INCLUDING BUT NOT LIMITED TO VERIFICATION OF CONTROL AND ALL UTILITIES WHETHER DEPICTED OR NOT) PRIOR TO CONSTRUCTION AND NOTIFY ENGINEER OF ANY DISCREPANCIES.
N.A. ADDITIONAL EXISTING TOPOGRAPHY AND UTILITY DATA SHOWN REPRESENTS SITE CONDITIONS MEASURED BY NT LAND SURVEYING INC. ON 7-24-14.
O. SEE SHEETS 1-4 "PLAT OF SURVEY" FOR ALL EXISTING LOCATED UTILITY DATA.
P. CLEAR SITE AS NECESSARY TO CONSTRUCT PROPOSED IMPROVEMENTS.
Q. ALL ITEMS MARK "EXISTING OR EXISTING TO REMAIN" TO BE PROTECTED FROM DAMAGE FOR THE DURATION OF CONSTRUCTION.
R. CONTRACTOR TO PROVIDE SOIL TESTING SERVICES FOR COMPLETION OF THE ILLINOIS ENVIRONMENTAL PROTECTION AGENCY'S LPC-662 AND/OR LPC-663 FORMS AS PART OF THEIR CONTRACT.
S. ALL EXISTING UTILITIES TO BE ABANDONED IN PLACE SHALL BE CAPPED WITH 2' LONG (MIN.) NON-SHRINK CONCRETE MORTAR PLUGS AT BOTH ENDS.

NORTH

1" = 30'

00 15 30 60 120

AQUATIC \ CIVIL \ MECHANICAL \ ELECTRICAL \ PLUMBING \ TELECOMMUNICATION \ STRUCTURAL \ ACCESSIBILITY CONSULTING \ DESIGN & PROGRAM MANAGEMENT \ LAND SURVEY

WT GROUP
Engineering with Precision, Pace and Passion.
2675 Pratum Avenue | Hoffman Estates, IL 60192
T: 224.293.0303 F: 224.293.0444
wtengineering.com
IL License No: 184.007570-0015 Expires: 04.30.2021

© COPYRIGHT 2019 THE W-T GROUP, LLC

WT Group
Engineering • Design • Consulting

SOUTH RIDGE COMMUNITY PARK
ENHANCEMENT PLAN 2019
1450 FREEMAN ROAD
HOFFMAN ESTATES, IL 60192

heparks
making life fun

ISSUE

TO	DATE
MWRD	9/17/19
MWRD	10/22/19
VILLAGE	11/25/19
MWRD	1/2/20
SWCD	1/17/20
FOR BID	1/23/20
ADD #1	2/03/20

CHECK: CMS

DRAWN: PS

1911354C

C-2.0
SITE DEMOLITION PLAN

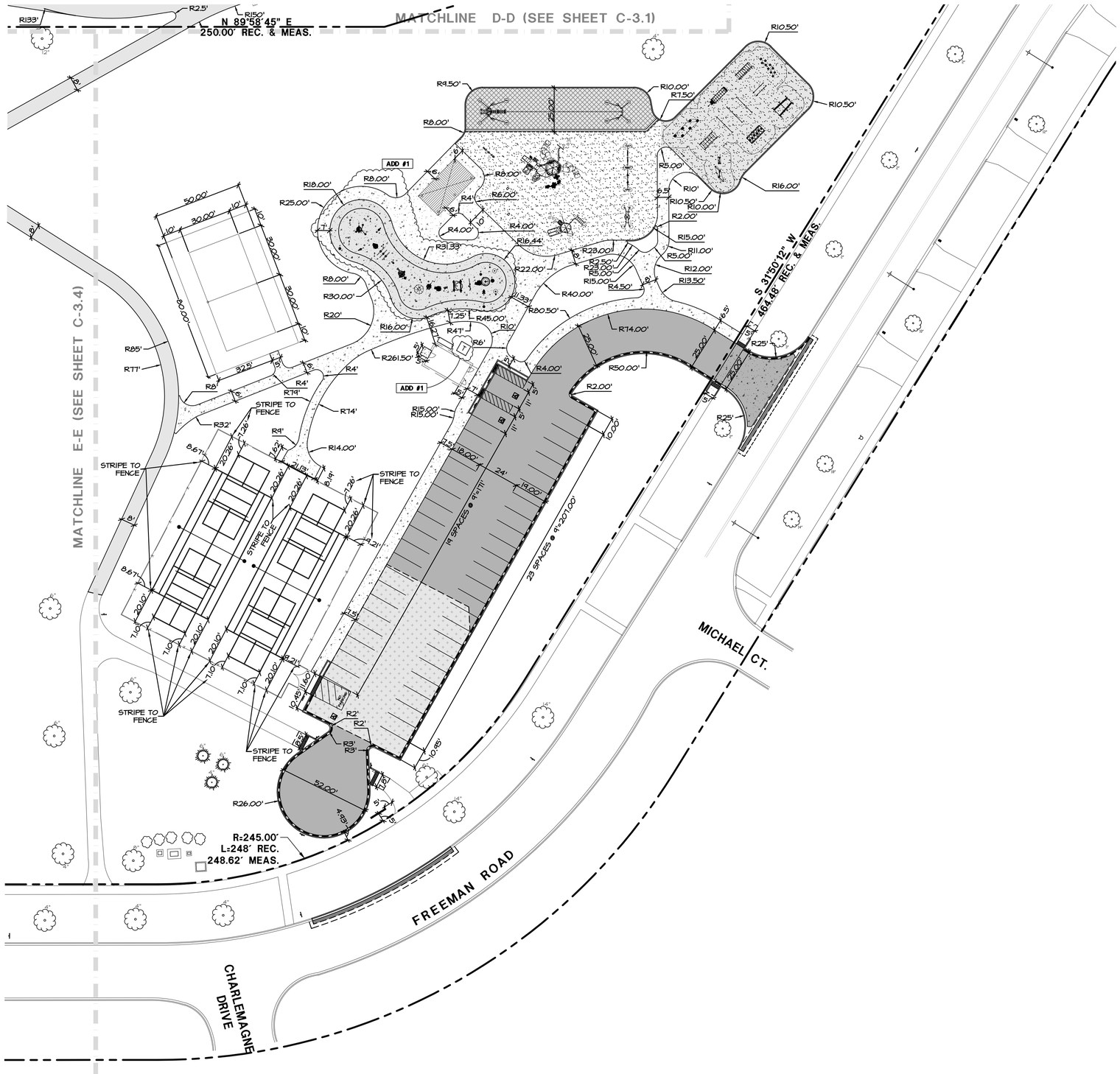

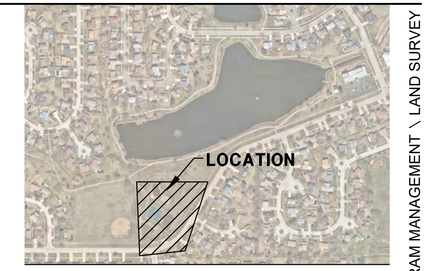

KEYMAP

SCALE: N.T.S.

NORTH

HATCH LEGEND

- NEW ASPHALT TRAIL
  2" HMA SURFACE COURSE
  8" CA-6 BASE COURSE
- NEW ROADWAY PAVEMENT TO MATCH EXISTING CROSS SECTION
- NEW 5" CONCRETE SIDEWALK
  5" PORTLAND CEMENT CONCRETE
  4" CA-6 BASE COURSE
- NEW 6" CONCRETE PAVEMENT
  6" PORTLAND CEMENT CONCRETE
  4" CA-6 BASE COURSE
- NEW SYNTHETIC TURF PLAYGROUND
- NEW ASPHALT PAVEMENT
  1-3/4" HMA SURFACE COURSE
  2-1/4" HMA BINDER COURSE
  10" CA-6 BASE COURSE
- NEW 1-3/4" ASPHALT MILL & OVERLAY
  SEE DETAIL
- NEW ENGINEERED WOOD FIBER
- NEW SYNTHETIC TURF FITNESS AREA
- NEW CONCRETE SPLASH PAD

SITE GEOMETRIC NOTES:

A. EXISTING CONDITIONS AND TOPOGRAPHY SHOWN REPRESENTS SITE CONDITIONS PER THE PLAT OF SURVEY LAST DATED 6-16-2004 PREPARED BY ENGINEERING RESOURCE ASSOCIATES INC. CONTRACTOR SHALL FIELD VERIFY EXISTING ELEVATIONS AND CONDITIONS (INCLUDING BUT NOT LIMITED TO VERIFICATION OF CONTROL AND ALL UTILITIES WHETHER DEPICTED OR NOT) PRIOR TO CONSTRUCTION AND NOTIFY ENGINEER OF ANY DISCREPANCIES.

A.A. ADDITIONAL EXISTING TOPOGRAPHY AND UTILITY DATA SHOWN REPRESENTS SITE CONDITIONS MEASURED BY WT LAND AND SURVEYING INC. ON 7-24-19.

B. ALL DIMENSIONS SHOWN ARE MEASURED FROM EDGE OF PAVEMENT TO EDGE OF PAVEMENT OR FACE OF CURB UNLESS OTHERWISE NOTED.

C. CONTRACTOR SHALL NOTIFY THE ENGINEER OF ANY DISCREPANCIES WITH THE ARCHITECTURAL PLANS.

D. SEE THE ARCHITECTURAL PLANS FOR THE DESIGN OF ALL BUILDING ENTRIES.

E. CONSTRUCTION SURVEY AND STAKEOUT SHALL BE THE RESPONSIBILITY OF THE CONTRACTOR.

F. CONTRACTOR SHALL HIRE A PRIVATE UTILITY LOCATOR TO LOCATE UTILITIES PRIOR TO CONSTRUCTION AND SHALL CONTACT THE SITE ENGINEER IF A CONFLICT EXISTS.

G. CONTRACTOR SHALL CONTACT J.U.L.I.E. (811 OR 1-800-842-0123) AND PRIVATE LOCATING SERVICE TO LOCATE ALL UNDERGROUND UTILITY LINES PRIOR TO STARTING ANY DEMOLITION AND/OR EXCAVATION. EXACT LOCATIONS OF ANY EXISTING ELECTRIC, GAS, TELEPHONE, ETC. LINES ARE UNKNOWN.

H. ASPHALT PAVEMENT MARKINGS SHALL BE MADE WITH HIGH QUALITY PAINT CONFORMING TO ARTICLE 1095.02 OF THE IDOT STANDARD SPECIFICATIONS.

I. SEE SHEET C-4.7 FOR TENNIS COURT AND PICKLEBALL COURT STRIPING PLAN.

CALL JULIE TOLL FREE
1(800)892-0123
OPERATES 24 HOURS A DAY 365 DAYS A YEAR

WARNING
CALL BEFORE YOU DIG

CALL
1(800)892-0123
48 HOURS BEFORE YOU DIG

CONTRACTOR MUST LOCATE PRIVATE UTILITIES IN AREA OF CONSTRUCTION PRIOR TO PROCEEDING WITH WORK.

NORTH

1" = 30'

00 15 30 60 120

AQUATIC \ CIVIL \ MECHANICAL \ ELECTRICAL \ PLUMBING \ TELECOMMUNICATION \ STRUCTURAL \ ACCESSIBILITY CONSULTING \ DESIGN & PROGRAM MANAGEMENT \ LAND SURVEY

WT GROUP
Engineering with Precision, Pace and Passion.
2675 Pratum Avenue | Hoffman Estates, IL 60192
T: 224.293.0300 F: 224.293.0444
wtengineering.com
IL License No: 184.007570-0015 Expires: 04.30.2021
© COPYRIGHT 2019 THE W-T GROUP, LLC

WT Group
Engineering • Design • Consulting

SOUTH RIDGE COMMUNITY PARK
ENHANCEMENT PLAN 2019
1450 FREEMAN ROAD
HOFFMAN ESTATES, IL 60192

heparks
making life fun.

ISSUE

TO	DATE
MWRD	9/17/19
MWRD	10/22/19
VILLAGE	11/25/19
MWRD	1/2/20
SWCD	1/17/20
FOR BID	1/23/20
ADD #1	2/03/20

CHECK: CMS
DRAWN: PS
1911354C

C-3.0
SITE GEOMETRIC PLAN

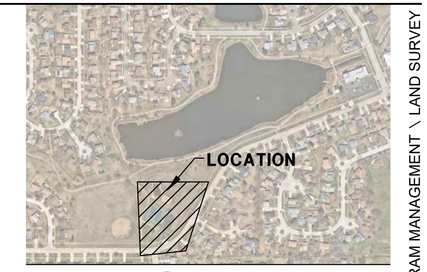

KEYMAP

SCALE: N.T.S.

NORTH

SITE DEVELOPMENT NOTES:

A. EXISTING CONDITIONS AND TOPOGRAPHY SHOWN REPRESENTS SITE CONDITIONS PER THE PLAT OF SURVEY LAST DATED 6-16-2004 PREPARED BY ENGINEERING RESOURCE ASSOCIATES INC. CONTRACTOR SHALL FIELD VERIFY EXISTING ELEVATIONS AND CONDITIONS (INCLUDING BUT NOT LIMITED TO VERIFICATION OF CONTROL AND ALL UTILITIES WHETHER DEPICTED OR NOT) PRIOR TO CONSTRUCTION AND NOTIFY ENGINEER OF ANY DISCREPANCIES.

A.A. ADDITIONAL EXISTING TOPOGRAPHY AND UTILITY DATA SHOWN REPRESENTS SITE CONDITIONS MEASURED BY WT LAND SURVEYING INC. ON 7-24-19.

B. CONTRACTOR SHALL NOTIFY THE ENGINEER OF ANY DISCREPANCIES WITH THE ARCHITECTURAL PLANS.

C. SEE THE ARCHITECTURAL PLANS FOR THE DESIGN OF ALL BUILDING ENTRIES.

D. CONTRACTOR SHALL COORDINATE ALL LANDSCAPING IMPROVEMENTS WITH LANDSCAPE PLANS.

E. CONSTRUCTION SURVEY AND STAKEOUT SHALL BE THE RESPONSIBILITY OF THE CONTRACTOR.

F. ALL EXISTING TREES SHOWN ARE TO REMAIN UNLESS OTHERWISE NOTED.

G. CONTRACTOR SHALL RESTORE ALL DISTURBED AREAS OUTSIDE OF CONSTRUCTION LIMITS TO ORIGINAL CONDITION OR BETTER.

H. ASPHALT PAVEMENT MARKINGS SHALL BE MADE WITH HIGH QUALITY PAINT CONFORMING TO ARTICLE 1095.02 OF THE IDOT STANDARD SPECIFICATIONS.

I. CONTRACTOR SHALL RESTORE ALL DISTURBED GREEN SPACES WITH 6" OF TOPSOIL, SEED, AND EROSION CONTROL BLANKET.

J. CONTRACTOR SHALL REPAIR AT HIS EXPENSE ANY DAMAGE TO EXISTING ASPHALT , CONCRETE, CURBS, SIDEWALKS, ETC. RESULTING FROM CONSTRUCTION TRAFFIC AND/OR OPERATIONS. REPAIRS SHALL BE MADE TO THE SATISFACTION OF THE OWNER AND/OR ENGINEER.

K. CONTRACTOR SHALL RE-STRIPE ALL STRIPING DISTURBED WITHIN THE EXISTING ROADWAYS/PARKING LOT TO MATCH EXISTING.

L. CONTRACTOR SHALL HIRE A PRIVATE UTILITY LOCATOR TO LOCATE UTILITIES PRIOR TO CONSTRUCTION AND SHALL CONTACT THE SITE ENGINEER IF A CONFLICT EXISTS.

M. ALL ITEMS MARKED "EXISTING" TO BE PROTECTED FROM DAMAGE FOR THE DURATION OF CONSTRUCTION.

N. ALL EXISTING SUBGRADE TO BE SCARIFIED (DISKED) TO A DEPTH OF 12" AND RE-COMPACTED, AND THEN TESTED USING A DYNAMIC CONE PENETROMETER. SEE GEOTECHNICAL REPORT FOR ADDITIONAL REQUIREMENTS.

PROJECT NOTES:

1. NEW FULL DEPTH SAWCUT OF EXISTING ASPHALT PAVEMENT TO PROVIDE CLEAN CONSTRUCTION BREAK.
2. NEW 2' BUTT JOINT.
3. NEW ASPHALT PAVEMENT.
4. SEALCOAT EXISTING ASPHALT PAVEMENT.
5. EXISTING BLOCK WALL TO REMAIN.
6. EXISTING CONCRETE PAVEMENT TO REMAIN.
7. EXISTING ASPHALT PAVEMENT TO REMAIN.
8. EXISTING BRIDGE TO REMAIN.
9. EXISTING TRASH CAN ON CONCRETE PAD TO REMAIN.
10. EXISTING BUILDING TO REMAIN.
11. INSTALL SALVAGED I.D. SIGN.
12. EXISTING PLAYGROUND TO REMAIN.
13. EXISTING SIGN TO REMAIN.
14. EXISTING STREET LIGHT TO REMAIN.
15. EXISTING WHEEL STOP TO REMAIN.
16. NEW ACCESSIBLE PARKING STRIPING AND SYMBOL.
17. EXISTING FENCE TO REMAIN. PROTECT DURING CONSTRUCTION.
18. NEW VOLLEYBALL COURT POST AND NET.
19. EXISTING CURB AND GUTTER TO REMAIN.
20. EXISTING DEPRESSED CURB AND GUTTER TO REMAIN.
21. EXISTING TENNIS COURT POST AND NET TO REMAIN.
22. NEW ASPHALT TRAIL.
23. EXISTING BENCH ON CONCRETE PAD TO REMAIN.
24. NEW TENNIS COURT AND PICKLE BALL COURT STRIPING. SEE SHEET C-4.1 FOR LAYOUT.
25. NEW FULL DEPTH SAWCUT OF EXISTING CONCRETE/CURB TO PROVIDE CLEAN CONSTRUCTION BREAK.
26. NEW 5" CONCRETE SIDEWALK.
27. NEW 6" CONCRETE PAVEMENT.
28. NEW PAVEMENT STRIPING.
29. NEW SAND VOLLEYBALL COURT.
30. NEW PLAYGROUND EQUIPMENT TO BE PROVIDED BY THE OWNER AND INSTALLED BY THE CONTRACTOR. CONTACT PLAYGROUND MANUFACTURER FOR PLANS AND INSTALLATION INSTRUCTIONS, PREPARED BY GAMETIME (1-800-235-2440). PLAYGROUND SHALL BE INSTALLED PER MANUFACTURER SPECIFICATIONS.
31. NEW BATHROOM FACILITY. CONTRACTOR SHALL INSTALL FOUNDATIONS AND STUB PROPOSED UTILITIES INSIDE BUILDING. BUILDING FRAME AND INTERIOR FIXTURES TO BE BUILT BY OWNER. (SEE ARCHITECTURAL AND MEP PLANS FOR DETAILS).
32. EXISTING PAVEMENT STRIPING TO REMAIN.
33. NEW RETAINING WALL.
34. EXISTING GENERATOR TO REMAIN.
35. EXISTING ELECTRIC METER TO REMAIN.
36. EXISTING TRANSFORMER TO REMAIN.
37. NEW DEPRESSED CURB AND GUTTER.
38. NEW B6.12 CURB AND GUTTER WITH REVERSE GUTTER PITCH.
39. NEW ADA PARKING SIGN.
40. NEW PLAYGROUND CURB.
41. NEW B6.12 CURB AND GUTTER.
42. NEW ROADWAY PAVEMENT TO MATCH EXISTING CROSS SECTION.
43. NEW 6" BARRIER CURB.
44. EXISTING TENNIS COURT PAVEMENT TO REMAIN. REPAIR CRACKS WITHIN THE ASPHALT COURT AND RECOAT COURT PER THE PROJECT SPECIFICATIONS.
45. NEW 16' X 30' HIP END STRUCTURE PROVIDED BY OWNER AND INSTALLED BY THE CONTRACTOR. SEE SHELTER DRAWINGS FOR DETAILS. ADD #1
46. NEW MONOLITHIC CURB AND 5" CONCRETE SIDEWALK.
47. NEW 2' WIDE ADA DETECTABLE WARNING PLATE.
48. NEW PLANTER BOX. (SEE DETAIL ON SHEET C-4.5).
49. NEW ACCESSIBLE CURB RAMP WITH 2' WIDE ADA DETECTABLE WARNING PLATE TO EXTEND THE FULL WIDTH OF THE CURB RAMP.
50. NEW SYNTHETIC TURF PLAYGROUND. SYNTHETIC TURF, PAD AND INFILL TO BE SUPPLIED BY CONTRACTOR AND INSTALLED BY CONTRACTOR . ADD #1
51. NEW MONOLITHIC PLAYGROUND CURB AND 5" CONCRETE SIDEWALK.
52. NEW DOCK. (BY OWNER)
53. EXISTING DOCK TO REMAIN.
54. EXISTING CONCRETE WALL TO REMAIN.
55. EXISTING OUTLET CONTROL STRUCTURE AND OVERFLOW WEIR TO REMAIN.
56. INSTALL SALVAGED WHEEL STOP.
57. INSTALL SALVAGED ADA PARKING SIGN ON NEW POST.
58. NEW "PATH NOT ADA COMPLIANT" SIGN. (BY OWNER)
59. NEW 1.75" MILL AND ASPHALT OVERLAY. SEE DETAIL.
60. NEW 2' DETECTABLE WARNING STRIP.
61. NEW R7-100 "NO PARKING" SIGN.
62. NEW PLAYGROUND TRANSITION CURB.
63. NEW WOOD MULCH PLAYGROUND AREA.
64. NEW FITNESS EQUIPMENT TO BE PROVIDED BY THE OWNER AND INSTALLED BY THE CONTRACTOR. SEE FITNESS COURSE PLANS, PREPARED BY BCI BURKE COMPANY, FOR EQUIPMENT LAYOUT AND INSTALLATION SPECIFICATIONS. ALL EQUIPMENT SHALL BE INSTALLED PER MANUFACTURERS SPECIFICATIONS.
65. NEW SPLASH PAD EQUIPMENT TO BE PROVIDED BY THE OWNER AND INSTALLED BY THE CONTRACTOR. SEE SPLASH PAD PLANS, PREPARED BY VORTEX AQUATIC STRUCTURES INTERNATIONAL, FOR EQUIPMENT LAYOUT AND INSTALLATION SPECIFICATIONS. SEE MEP PLANS FOR WATER AND SEWER PIPING WITHIN THE BUILDING AND PAD (SEE DETAIL).
66. NEW CONCRETE SPLASH PAD. PROVIDE EXPANSION JOINTS BETWEEN WALKS. CONTRACTOR SHALL PROVIDE EXPANSION JOINT LAYOUT FOR ENGINEER REVIEW.
67. NEW SYNTHETIC TURF FITNESS AREA. PERFECT TURF MAT, PAD, AND RUBBER INFILL TO BE PROVIDED BY OWNER.
68. NEW WINTERIZING PIT FOR WINTER SHUT DOWN. WALLS OF THE PIT SHALL BE 5" THICK CONCRETE. PROVIDE WATER TIGHT ACCESS GATE. BOTTOM OF THE PIT SHALL BE SET TO PROVIDE SUFFICIENT SLOPE FOR PIPING. ADD #1
69. EXPANSION JOINT WITH WATER STOP.
70. NEW TRANSFORMER. (SEE MEP PLANS FOR DETAILS).

HATCH LEGEND

- NEW ASPHALT TRAIL — 2" HMA SURFACE COURSE, 8" CA-6 BASE COURSE
- NEW ROADWAY PAVEMENT TO MATCH EXISTING CROSS SECTION
- NEW 5" CONCRETE SIDEWALK — 5" PORTLAND CEMENT CONCRETE, 4" CA-6 BASE COURSE
- NEW 6" CONCRETE PAVEMENT — 6" PORTLAND CEMENT CONCRETE, 4" CA-6 BASE COURSE
- NEW SYNTHETIC TURF PLAYGROUND
- NEW ASPHALT PAVEMENT — 1-3/4" HMA SURFACE COURSE, 2-1/4" HMA BINDER COURSE, 10" CA-6 BASE COURSE
- NEW 1-3/4" ASPHALT MILL & OVERLAY — SEE DETAIL
- NEW ENGINEERED WOOD FIBER
- NEW SYNTHETIC TURF FITNESS AREA
- NEW CONCRETE SPLASH PAD

NORTH

1" = 30'

00 15 30 60 120

AQUATIC \ CIVIL \ MECHANICAL \ ELECTRICAL \ PLUMBING \ TELECOMMUNICATION \ STRUCTURAL \ ACCESSIBILITY CONSULTING \ DESIGN & PROGRAM MANAGEMENT \ LAND SURVEY

WT GROUP
Engineering with Precision, Pace and Passion.
2675 Pratum Avenue | Hoffman Estates, IL 60192
T: 224.293.0501 F: 224.293.0544
wtengineering.com
IL License No: 184.007570-0015 Expires: 04.30.2021
© COPYRIGHT 2019 THE W-T GROUP, LLC

WT Group
Engineering • Design • Consulting

SOUTH RIDGE COMMUNITY PARK
ENHANCEMENT PLAN 2019
1450 FREEMAN ROAD
HOFFMAN ESTATES, IL 60192

heparks making life fun

ISSUE

TO	DATE
MWRD	9/17/19
MWRD	10/22/19
VILLAGE	11/25/19
MWRD	1/2/20
SWCD	1/17/20
FOR BID	1/23/20
ADD #1	2/03/20

CHECK: CMS
DRAWN: PS
1911354C

C-4.0
SITE DEVELOPMENT PLAN

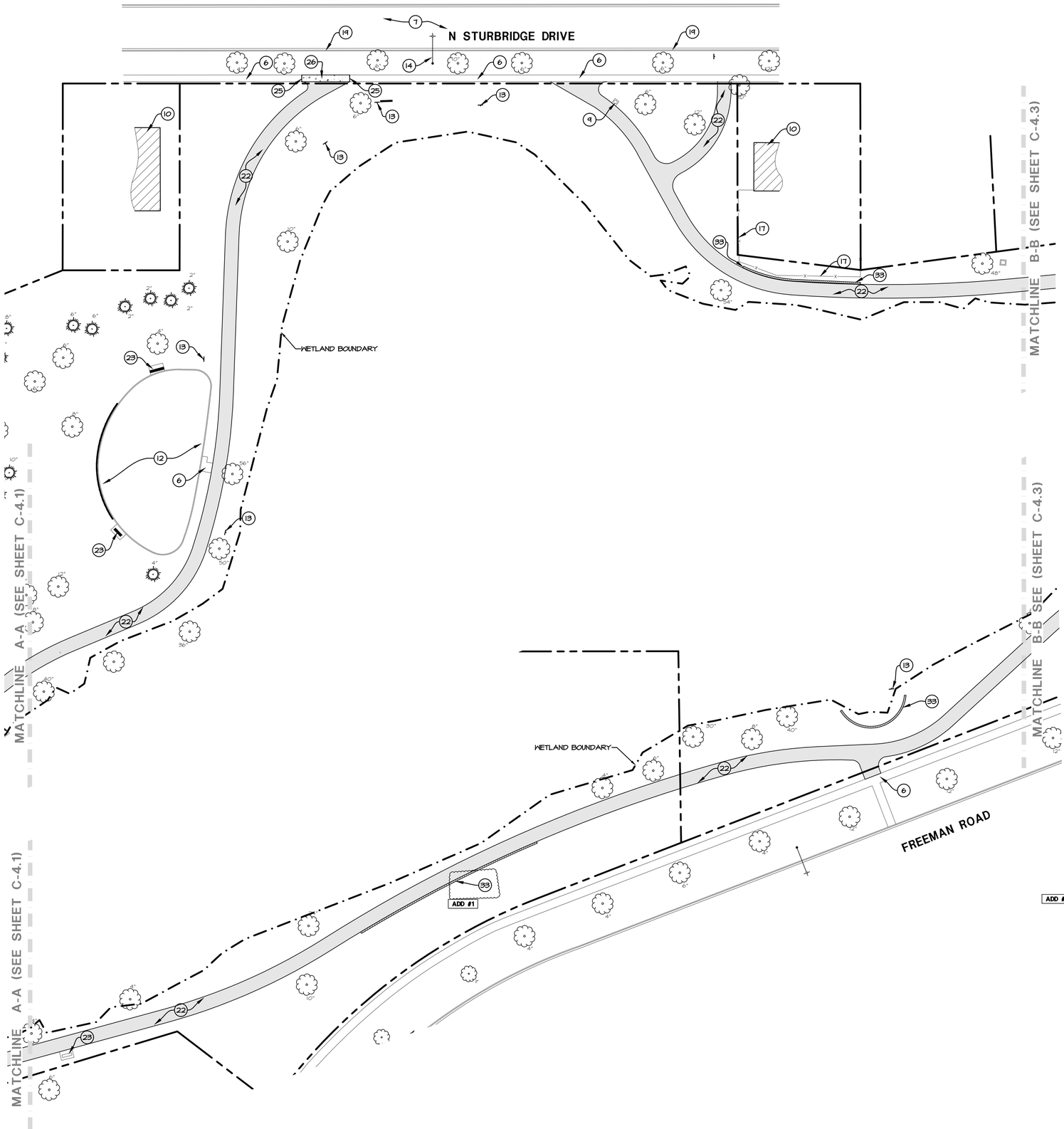

KEYMAP

SCALE: N.T.S.

NORTH

HATCH LEGEND

- NEW ASPHALT TRAIL
  2" HMA SURFACE COURSE
  8" CA-6 BASE COURSE
- NEW ROADWAY PAVEMENT TO MATCH EXISTING CROSS SECTION
- NEW 5" CONCRETE SIDEWALK
  5" PORTLAND CEMENT CONCRETE
  4" CA-6 BASE COURSE
- NEW 6" CONCRETE PAVEMENT
  6" PORTLAND CEMENT CONCRETE
  4" CA-6 BASE COURSE
- NEW SYNTHETIC TURF PLAYGROUND
- NEW ASPHALT PAVEMENT
  1-3/4" HMA SURFACE COURSE
  2-1/4" HMA BINDER COURSE
  10" CA-6 BASE COURSE
- NEW 1-3/4" ASPHALT MILL & OVERLAY
  SEE DETAIL
- NEW ENGINEERED WOOD FIBER
- NEW SYNTHETIC TURF FITNESS AREA
- NEW CONCRETE SPLASH PAD

PROJECT NOTES:

1. NEW FULL DEPTH SAWCUT OF EXISTING ASPHALT PAVEMENT TO PROVIDE CLEAN CONSTRUCTION BREAK.
2. NEW 2' BUTT JOINT.
3. NEW ASPHALT PAVEMENT.
4. SEALCOAT EXISTING ASPHALT PAVEMENT.
5. EXISTING BLOCK WALL TO REMAIN.
6. EXISTING CONCRETE PAVEMENT TO REMAIN.
7. EXISTING ASPHALT PAVEMENT TO REMAIN.
8. EXISTING BRIDGE TO REMAIN.
9. EXISTING TRASH CAN ON CONCRETE PAD TO REMAIN.
10. EXISTING BUILDING TO REMAIN.
11. INSTALL SALVAGED I.D. SIGN.
12. EXISTING PLAYGROUND TO REMAIN.
13. EXISTING SIGN TO REMAIN.
14. EXISTING STREET LIGHT TO REMAIN.
15. EXISTING WHEEL STOP TO REMAIN.
16. NEW ACCESSIBLE PARKING STRIPING AND SYMBOL.
17. EXISTING FENCE TO REMAIN. PROTECT DURING CONSTRUCTION.
18. NEW VOLLEYBALL COURT POST AND NET.
19. EXISTING CURB AND GUTTER TO REMAIN.
20. EXISTING DEPRESSED CURB AND GUTTER TO REMAIN.
21. EXISTING TENNIS COURT POST AND NET TO REMAIN.
22. NEW ASPHALT TRAIL.
23. EXISTING BENCH ON CONCRETE PAD TO REMAIN.
24. NEW TENNIS COURT AND PICKLE BALL COURT STRIPING. SEE SHEET C-4.7 FOR LAYOUT.
25. NEW FULL DEPTH SAWCUT OF EXISTING CONCRETE/CURB TO PROVIDE CLEAN CONSTRUCTION BREAK.
26. NEW 5" CONCRETE SIDEWALK.
27. NEW 6" CONCRETE PAVEMENT.
28. NEW PAVEMENT STRIPING.
29. NEW SAND VOLLEYBALL COURT.
30. NEW PLAYGROUND EQUIPMENT TO BE PROVIDED BY THE OWNER AND INSTALLED BY THE CONTRACTOR. CONTACT PLAYGROUND MANUFACTURER FOR PLANS AND INSTALLATION INSTRUCTIONS, PREPARED BY GAMETIME (1-800-235-2440). PLAYGROUND SHALL BE INSTALLED PER MANUFACTURER SPECIFICATIONS.
31. NEW BATHROOM FACILITY. CONTRACTOR SHALL INSTALL FOUNDATIONS AND STUB PROPOSED UTILITIES INSIDE BUILDING. BUILDING FRAME AND INTERIOR FIXTURES TO BE BUILT BY OWNER. (SEE ARCHITECTURAL AND MEP PLANS FOR DETAILS).
32. EXISTING PAVEMENT STRIPING TO REMAIN.
33. NEW RETAINING WALL.
34. EXISTING GENERATOR TO REMAIN.
35. EXISTING ELECTRIC METER TO REMAIN.
36. EXISTING TRANSFORMER TO REMAIN.
37. NEW DEPRESSED CURB AND GUTTER.
38. NEW B6.12 CURB AND GUTTER WITH REVERSE GUTTER PITCH.
39. NEW ADA PARKING SIGN.
40. NEW PLAYGROUND CURB.
41. NEW B6.12 CURB AND GUTTER.
42. NEW ROADWAY PAVEMENT TO MATCH EXISTING CROSS SECTION.
43. NEW 6" BARRIER CURB.
44. EXISTING TENNIS COURT PAVEMENT TO REMAIN. REPAIR CRACKS WITHIN THE ASPHALT COURT AND RECOAT COURT PER THE PROJECT SPECIFICATIONS.
45. NEW 16' X 30' HIP END STRUCTURE PROVIDED BY OWNER AND INSTALLED BY THE CONTRACTOR. SEE SHELTER DRAWINGS FOR DETAILS ADD #1
46. NEW MONOLITHIC CURB AND 5" CONCRETE SIDEWALK.
47. NEW 2' WIDE ADA DETECTABLE WARNING PLATE.
48. NEW PLANTER BOX. (SEE DETAIL ON SHEET C-4.5).
49. NEW ACCESSIBLE CURB RAMP WITH 2' WIDE ADA DETECTABLE WARNING PLATE TO EXTEND THE FULL WIDTH OF THE CURB RAMP.
50. NEW SYNTHETIC TURF PLAYGROUND. SYNTHETIC TURF, PAD AND INFILL TO BE SUPPLIED BY (CONTRACTOR) AND INSTALLED BY CONTRACTOR . ADD #1
51. NEW MONOLITHIC PLAYGROUND CURB AND 5" CONCRETE SIDEWALK.
52. NEW DOCK. (BY OWNER)
53. EXISTING DOCK TO REMAIN.
54. EXISTING CONCRETE WALL TO REMAIN.
55. EXISTING OUTLET CONTROL STRUCTURE AND OVERFLOW WEIR TO REMAIN.
56. INSTALL SALVAGED WHEEL STOP.
57. INSTALL SALVAGED ADA PARKING SIGN ON NEW POST.
58. NEW "PATH NOT ADA COMPLIANT" SIGN. (BY OWNER)
59. NEW 1.75" MILL AND ASPHALT OVERLAY. SEE DETAIL.
60. NEW 2' DETECTABLE WARNING STRIP.
61. NEW R7-100 "NO PARKING" SIGN.
62. NEW PLAYGROUND TRANSITION CURB.
63. NEW WOOD MULCH PLAYGROUND AREA.
64. NEW FITNESS EQUIPMENT TO BE PROVIDED BY THE OWNER AND INSTALLED BY THE CONTRACTOR. SEE FITNESS COURSE PLANS, PREPARED BY BCI BURKE COMPANY, FOR EQUIPMENT LAYOUT AND INSTALLATION SPECIFICATIONS. ALL EQUIPMENT SHALL BE INSTALLED PER MANUFACTURERS SPECIFICATIONS.
65. NEW SPLASH PAD EQUIPMENT TO BE PROVIDED BY THE OWNER AND INSTALLED BY THE CONTRACTOR. SEE SPLASH PAD PLANS, PREPARED BY VORTEX AQUATIC STRUCTURES INTERNATIONAL, FOR EQUIPMENT LAYOUT AND INSTALLATION SPECIFICATIONS. SEE MEP PLANS FOR WATER AND SEWER PIPING WITHIN THE BUILDING AND PAD (SEE DETAIL).
66. NEW CONCRETE SPLASH PAD. PROVIDE EXPANSION JOINTS BETWEEN WALKS. CONTRACTOR SHALL PROVIDE EXPANSION JOINT LAYOUT FOR ENGINEER REVIEW.
67. NEW SYNTHETIC TURF FITNESS AREA. PERFECT TURF MAT, PAD, AND RUBBER INFILL TO BE PROVIDED BY OWNER.
68. NEW WINTERIZING PIT FOR WINTER SHUT DOWN. WALLS OF THE PIT SHALL BE 5" THICK CONCRETE. PROVIDE WATER TIGHT ACCESS GATE. BOTTOM OF THE PIT SHALL BE SET TO PROVIDE SUFFICIENT SLOPE FOR PIPING.
69. EXPANSION JOINT WITH WATER STOP. ADD #1
70. NEW TRANSFORMER. (SEE MEP PLANS FOR DETAILS)

NORTH

1" = 30'

00 15 30 60 120

AQUATIC \ CIVIL \ MECHANICAL \ ELECTRICAL \ PLUMBING \ TELECOMMUNICATION \ STRUCTURAL \ ACCESSIBILITY CONSULTING \ DESIGN & PROGRAM MANAGEMENT \ LAND SURVEY

WT GROUP
Engineering with Precision. Pace and Passion.
2675 Pratum Avenue | Hoffman Estates, IL 60192
T: 224.293.0300 F: 224.293.0444
wtengineering.com
IL License No: 184.007570-0015 Expires: 04.30.2021
© COPYRIGHT 2019 THE W-T GROUP, LLC

WT Group
Engineering • Design • Consulting

SOUTH RIDGE COMMUNITY PARK
ENHANCEMENT PLAN 2019
1450 FREEMAN ROAD
HOFFMAN ESTATES, IL 60192

heparks
making life fun

ISSUE

TO	DATE
MWRD	9/17/19
MWRD	10/22/19
VILLAGE	11/25/19
MWRD	1/2/20
SWCD	1/17/20
FOR BID	1/23/20
ADD #1	2/03/20

CHECK: CMS

DRAWN: PS

1911354C

C-4.2
SITE DEVELOPMENT PLAN

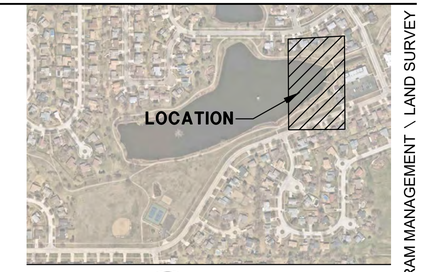

KEYMAP

SCALE: N.T.S.

NORTH

SITE DEVELOPMENT NOTES:

A. EXISTING CONDITIONS AND TOPOGRAPHY SHOWN REPRESENTS SITE CONDITIONS PER THE PLAT OF SURVEY LAST DATED 6-16-2004 PREPARED BY ENGINEERING RESOURCE ASSOCIATES INC. CONTRACTOR SHALL FIELD VERIFY EXISTING ELEVATIONS AND CONDITIONS (INCLUDING BUT NOT LIMITED TO VERIFICATION OF CONTROL AND ALL UTILITIES WHETHER DEPICTED OR NOT) PRIOR TO CONSTRUCTION AND NOTIFY ENGINEER OF ANY DISCREPANCIES.

A.A. ADDITIONAL EXISTING TOPOGRAPHY AND UTILITY DATA SHOWN REPRESENTS SITE CONDITIONS MEASURED BY WT LAND SURVEYING INC. ON 7-24-19.

B. CONTRACTOR SHALL NOTIFY THE ENGINEER OF ANY DISCREPANCIES WITH THE ARCHITECTURAL PLANS.

C. SEE THE ARCHITECTURAL PLANS FOR THE DESIGN OF ALL BUILDING ENTRIES.

D. CONTRACTOR SHALL COORDINATE ALL LANDSCAPING IMPROVEMENTS WITH LANDSCAPE PLANS.

E. CONSTRUCTION SURVEY AND STAKEOUT SHALL BE THE RESPONSIBILITY OF THE CONTRACTOR.

F. ALL EXISTING TREES SHOWN ARE TO REMAIN UNLESS OTHERWISE NOTED.

G. CONTRACTOR SHALL RESTORE ALL DISTURBED AREAS OUTSIDE OF CONSTRUCTION LIMITS TO ORIGINAL CONDITION OR BETTER.

H. ASPHALT PAVEMENT MARKINGS SHALL BE MADE WITH HIGH QUALITY PAINT CONFORMING TO ARTICLE 1095.02 OF THE IDOT STANDARD SPECIFICATIONS.

I. CONTRACTOR SHALL RESTORE ALL DISTURBED GREEN SPACES WITH 6" OF TOPSOIL, SEED, AND EROSION CONTROL BLANKET.

J. CONTRACTOR SHALL REPAIR AT HIS EXPENSE ANY DAMAGE TO EXISTING ASPHALT , CONCRETE, CURBS, SIDEWALKS, ETC. RESULTING FROM CONSTRUCTION TRAFFIC AND/OR OPERATIONS. REPAIRS SHALL BE MADE TO THE SATISFACTION OF THE OWNER AND/OR ENGINEER.

K. CONTRACTOR SHALL RE-STRIPE ALL STRIPING DISTURBED WITHIN THE EXISTING ROADWAYS/PARKING LOT TO MATCH EXISTING.

L. CONTRACTOR SHALL HIRE A PRIVATE UTILITY LOCATOR TO LOCATE UTILITIES PRIOR TO CONSTRUCTION AND SHALL CONTACT THE SITE ENGINEER IF A CONFLICT EXISTS.

M. ALL ITEMS MARKED "EXISTING" TO BE PROTECTED FROM DAMAGE FOR THE DURATION OF CONSTRUCTION.

N. ALL EXISTING SUBGRADE TO BE SCARIFIED (DISKED) TO A DEPTH OF 12" AND RE-COMPACTED, AND THEN TESTED USING A DYNAMIC CONE PENETROMETER. SEE GEOTECHNICAL REPORT FOR ADDITIONAL REQUIREMENTS.

PROJECT NOTES:

1. NEW FULL DEPTH SAWCUT OF EXISTING ASPHALT PAVEMENT TO PROVIDE CLEAN CONSTRUCTION BREAK.
2. NEW 2' BUTT JOINT.
3. NEW ASPHALT PAVEMENT.
4. SEALCOAT EXISTING ASPHALT PAVEMENT.
5. EXISTING BLOCK WALL TO REMAIN.
6. EXISTING CONCRETE PAVEMENT TO REMAIN.
7. EXISTING ASPHALT PAVEMENT TO REMAIN.
8. EXISTING BRIDGE TO REMAIN.
9. EXISTING TRASH CAN ON CONCRETE PAD TO REMAIN.
10. EXISTING BUILDING TO REMAIN.
11. INSTALL SALVAGED I.D. SIGN.
12. EXISTING PLAYGROUND TO REMAIN.
13. EXISTING SIGN TO REMAIN.
14. EXISTING STREET LIGHT TO REMAIN.
15. EXISTING WHEEL STOP TO REMAIN.
16. NEW ACCESSIBLE PARKING STRIPING AND SYMBOL.
17. EXISTING FENCE TO REMAIN. PROTECT DURING CONSTRUCTION.
18. NEW VOLLEYBALL COURT POST AND NET.
19. EXISTING CURB AND GUTTER TO REMAIN.
20. EXISTING DEPRESSED CURB AND GUTTER TO REMAIN.
21. EXISTING TENNIS COURT POST AND NET TO REMAIN.
22. NEW ASPHALT TRAIL.
23. EXISTING BENCH ON CONCRETE PAD TO REMAIN.
24. NEW TENNIS COURT AND PICKLE BALL COURT STRIPING. SEE SHEET C-4.1 FOR LAYOUT.
25. NEW FULL DEPTH SAWCUT OF EXISTING CONCRETE/CURB TO PROVIDE CLEAN CONSTRUCTION BREAK.
26. NEW 5" CONCRETE SIDEWALK.
27. NEW 6" CONCRETE PAVEMENT.
28. NEW PAVEMENT STRIPING.
29. NEW SAND VOLLEYBALL COURT.
30. NEW PLAYGROUND EQUIPMENT TO BE PROVIDED BY THE OWNER AND INSTALLED BY THE CONTRACTOR. CONTACT PLAYGROUND MANUFACTURER FOR PLANS AND INSTALLATION INSTRUCTIONS, PREPARED BY GAMETIME (1-800-235-2440). PLAYGROUND SHALL BE INSTALLED PER MANUFACTURER SPECIFICATIONS.
31. NEW BATHROOM FACILITY. CONTRACTOR SHALL INSTALL FOUNDATIONS AND STUB PROPOSED UTILITIES INSIDE BUILDING. BUILDING FRAME AND INTERIOR FIXTURES TO BE BUILT BY OWNER. (SEE ARCHITECTURAL AND MEP PLANS FOR DETAILS).
32. EXISTING PAVEMENT STRIPING TO REMAIN.
33. NEW RETAINING WALL.
34. EXISTING GENERATOR TO REMAIN.
35. EXISTING ELECTRIC METER TO REMAIN.
36. EXISTING TRANSFORMER TO REMAIN.
37. NEW DEPRESSED CURB AND GUTTER.
38. NEW B6.12 CURB AND GUTTER WITH REVERSE GUTTER PITCH.
39. NEW ADA PARKING SIGN.
40. NEW PLAYGROUND CURB.
41. NEW B6.12 CURB AND GUTTER.
42. NEW ROADWAY PAVEMENT TO MATCH EXISTING CROSS SECTION.
43. NEW 6" BARRIER CURB.
44. EXISTING TENNIS COURT PAVEMENT TO REMAIN. REPAIR CRACKS WITHIN THE ASPHALT COURT AND RECOAT COURT PER THE PROJECT SPECIFICATIONS.
45. NEW 16' X 30' HIP END STRUCTURE PROVIDED BY OWNER AND INSTALLED BY THE CONTRACTOR. SEE SHELTER DRAWINGS FOR DETAILS ADD #1
46. NEW MONOLITHIC CURB AND 5" CONCRETE SIDEWALK.
47. NEW 2' WIDE ADA DETECTABLE WARNING PLATE.
48. NEW PLANTER BOX. (SEE DETAIL ON SHEET C-4.5).
49. NEW ACCESSIBLE CURB RAMP WITH 2' WIDE ADA DETECTABLE WARNING PLATE TO EXTEND THE FULL WIDTH OF THE CURB RAMP.
50. NEW SYNTHETIC TURF PLAYGROUND, SYNTHETIC TURF, PAD AND INFILL TO BE SUPPLIED BY CONTRACTOR AND INSTALLED BY CONTRACTOR . ADD #1
51. NEW MONOLITHIC PLAYGROUND CURB AND 5" CONCRETE SIDEWALK.
52. NEW DOCK. (BY OWNER)
53. EXISTING DOCK TO REMAIN.
54. EXISTING CONCRETE WALL TO REMAIN.
55. EXISTING OUTLET CONTROL STRUCTURE AND OVERFLOW WEIR TO REMAIN.
56. INSTALL SALVAGED WHEEL STOP.
57. INSTALL SALVAGED ADA PARKING SIGN ON NEW POST.
58. NEW "PATH NOT ADA COMPLIANT" SIGN. (BY OWNER)
59. NEW 1.75" MILL AND ASPHALT OVERLAY. SEE DETAIL.
60. NEW 2' DETECTABLE WARNING STRIP.
61. NEW R7-100 "NO PARKING" SIGN.
62. NEW PLAYGROUND TRANSITION CURB.
63. NEW WOOD MULCH PLAYGROUND AREA.
64. NEW FITNESS EQUIPMENT TO BE PROVIDED BY THE OWNER AND INSTALLED BY THE CONTRACTOR. SEE FITNESS COURSE PLANS, PREPARED BY BCI BURKE COMPANY, FOR EQUIPMENT LAYOUT AND INSTALLATION SPECIFICATIONS. ALL EQUIPMENT SHALL BE INSTALLED PER MANUFACTURERS SPECIFICATIONS.
65. NEW SPLASH PAD EQUIPMENT TO BE PROVIDED BY THE OWNER AND INSTALLED BY THE CONTRACTOR. SEE SPLASH PAD PLANS, PREPARED BY VORTEX AQUATIC STRUCTURES INTERNATIONAL, FOR EQUIPMENT LAYOUT AND INSTALLATION SPECIFICATIONS. SEE MEP PLANS FOR WATER AND SEWER PIPING WITHIN THE BUILDING AND PAD (SEE DETAIL).
66. NEW CONCRETE SPLASH PAD. PROVIDE EXPANSION JOINTS BETWEEN WALKS. CONTRACTOR SHALL PROVIDE EXPANSION JOINT LAYOUT FOR ENGINEER REVIEW.
67. NEW SYNTHETIC TURF FITNESS AREA. PERFECT TURF MAT, PAD, AND RUBBER INFILL TO BE PROVIDED BY OWNER.
68. NEW WINTERIZING PIT FOR WINTER SHUT DOWN. WALLS OF THE PIT SHALL BE 5" THICK CONCRETE. PROVIDE WATER TIGHT ACCESS GATE. BOTTOM OF THE PIT SHALL BE SET TO PROVIDE SUFFICIENT SLOPE FOR PIPING.
69. EXPANSION JOINT WITH WATER STOP. ADD #1
70. NEW TRANSFORMER. (SEE MEP PLANS FOR DETAILS).

HATCH LEGEND

- NEW ASPHALT TRAIL — 2" HMA SURFACE COURSE, 8" CA-6 BASE COURSE
- NEW ROADWAY PAVEMENT TO MATCH EXISTING CROSS SECTION
- NEW 5" CONCRETE SIDEWALK — 5" PORTLAND CEMENT CONCRETE, 4" CA-6 BASE COURSE
- NEW 6" CONCRETE PAVEMENT — 6" PORTLAND CEMENT CONCRETE, 4" CA-6 BASE COURSE
- NEW SYNTHETIC TURF PLAYGROUND
- NEW ASPHALT PAVEMENT — 1-3/4" HMA SURFACE COURSE, 2-1/4" HMA BINDER COURSE, 10" CA-6 BASE COURSE
- NEW 1-3/4" ASPHALT MILL & OVERLAY — SEE DETAIL
- NEW ENGINEERED WOOD FIBER
- NEW SYNTHETIC TURF FITNESS AREA
- NEW CONCRETE SPLASH PAD

NORTH

1" = 30'

00 15 30 60 120

AQUATIC \ CIVIL \ MECHANICAL \ ELECTRICAL \ PLUMBING \ TELECOMMUNICATION \ STRUCTURAL \ ACCESSIBILITY CONSULTING \ DESIGN & PROGRAM MANAGEMENT \ LAND SURVEY

WT GROUP
Engineering with Precision, Pace and Passion.
2675 Pratum Avenue | Hoffman Estates, IL 60192
T: 224.293.0503 F: 224.293.0444
wtengineering.com
IL License No: 184.007570-0015 Expires: 04.30.2021
© COPYRIGHT 2019 THE W-T GROUP, LLC

WT Group
Engineering • Design • Consulting

SOUTH RIDGE COMMUNITY PARK
ENHANCEMENT PLAN 2019
1450 FREEMAN ROAD
HOFFMAN ESTATES, IL 60192

heparks
making life fun

ISSUE

TO	DATE
MWRD	9/17/19
MWRD	10/22/19
VILLAGE	11/25/19
MWRD	1/2/20
SWCD	1/17/20
FOR BID	1/23/20
ADD #1	2/03/20

CHECK: CMS

DRAWN: PS

1911354C

C-4.3
SITE DEVELOPMENT PLAN

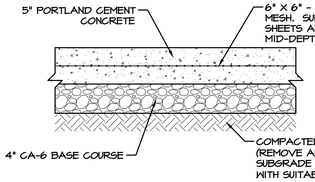

DETAIL - 5" CONCRETE SIDEWALK

NOT TO SCALE

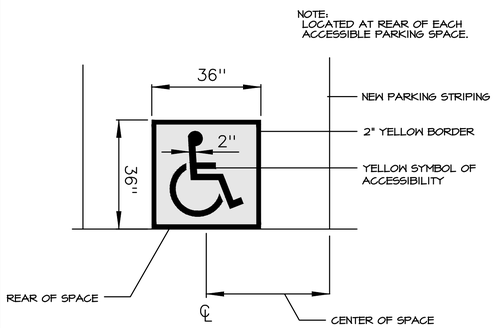

SYMBOL OF ACCESSIBILITY PAVEMENT MARKING

NOT TO SCALE

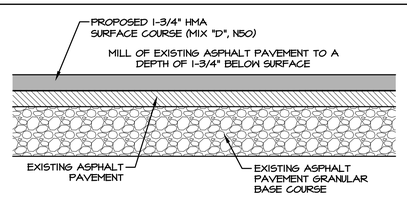

NOTES:

1. EXISTING PAVEMENT SECTION IS SHOWN FOR REFERENCE ONLY.
2. ALL ASPHALT PAVEMENT MILLINGS SHALL BE DISPOSED OF BY THE CONTRACTOR.
3. BITUMINOUS TACK COAT SHALL BE APPLIED AT A RATE OF 0.10 GALLONS PER SQUARE YARD TO THE EXISTING ASPHALT BINDER COURSE PRIOR TO NEW HMA SURFACE COURSE INSTALLATION.

DETAIL - MILL AND OVERLAY

NOT TO SCALE

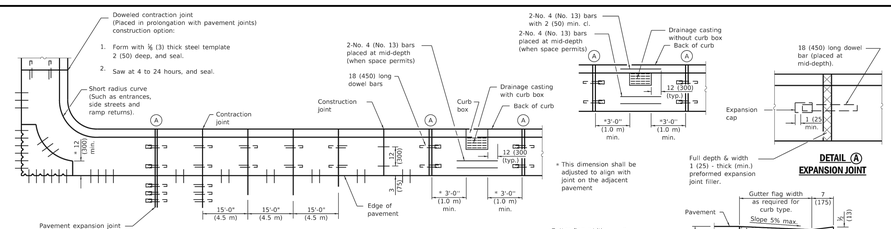

PLAN

ADJACENT TO PCC PAVEMENT OR PCC BASE COURSE

DETAIL (A) EXPANSION JOINT

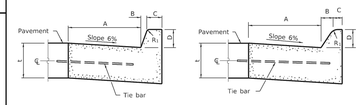

BARRIER CURB

MOUNTABLE CURB

TABLE OF DIMENSIONS BARRIER CURB					
TYPE	A	B	C	D	R_1
B-6.06 *	6	1	6	6	1
	(150)	(25)	(150)	(150)	(25)
B-6.12	12	1	6	6	1
	(300)	(25)	(150)	(150)	(25)
B-6.18	18	1	6	6	1
	(450)	(25)	(150)	(150)	(25)
B-6.24	24	1	6	6	1
	(600)	(25)	(150)	(150)	(25)
B-22.30	30	1	5	9	1
	(750)	(25)	(125)	(225)	(25)
B-22.36	36	1	5	9	1
	(900)	(25)	(125)	(225)	(25)
B-22.45	45	1	5	9	1
	(1150)	(25)	(125)	(225)	(25)
B-22.60	60	1	5	9	1
	(1600)	(25)	(125)	(225)	(25)

* For corner islands only.

TABLE OF DIMENSIONS MOUNTABLE CURB						
TYPE	A	B	C	D	R_1	R_2
M-2.06	6	2	4	2	3	2
	(150)	(50)	(100)	(50)	(75)	(50)
M-2.12	12	2	4	2	3	2
	(300)	(50)	(100)	(50)	(75)	(50)
M-4.06	6	2	4	2	3	NA
	(150)	(50)	(100)	(50)	(75)	
(M-10.15)	(150)	(50)	(100)	(50)	(75)	NA
M-4.12	12	2	4	2	3	
	(300)	(50)	(100)	(50)	(75)	
(M-10.30)	(300)	(50)	(100)	(50)	(75)	NA
M-4.18	18	2	4	2	3	
	(450)	(50)	(100)	(50)	(75)	
(M-10.45)	(450)	(50)	(100)	(50)	(75)	NA
M-4.24	24	2	4	2	3	
	(600)	(50)	(100)	(50)	(75)	
(M-10.60)	(600)	(50)	(100)	(50)	(75)	NA
M-6.06	6	2	6	2	6	
	(150)	(50)	(150)	(50)	(150)	
(M-15.15)	(150)	(50)	(150)	(50)	(150)	NA
M-6.12	12	2	6	2	6	
	(300)	(50)	(150)	(50)	(150)	
(M-15.30)	(300)	(50)	(150)	(50)	(150)	NA
M-6.18	18	2	6	2	6	
	(450)	(50)	(150)	(50)	(150)	
(M-15.45)	(450)	(50)	(150)	(50)	(150)	NA
M-6.24	24	2	6	2	6	
	(600)	(50)	(150)	(50)	(150)	
(M-15.60)	(600)	(50)	(150)	(50)	(150)	NA

Illinois Department of Transportation
PASSED January 1, 2018
ENGINEER OF LOCAL ROADS AND STREETS
APPROVED January 1, 2018
ENGINEER OF DESIGN AND ENVIRONMENT
BLR 10-11-13

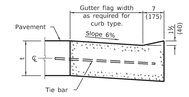

DEPRESSED CURB (TYPICAL)

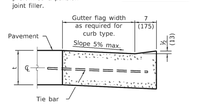

DEPRESSED CURB ADJACENT TO CURB RAMP ACCESSIBLE TO THE DISABLED

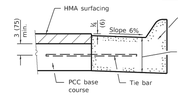

ADJACENT TO PCC BASE COURSE WITH HMA SURFACING

9 (225) when PCC base course ≤ 8 (200)
10 (250) when PCC base course > 8 (200)

DOWEL BAR TABLE

PAVEMENT THICKNESS	DOWEL BAR DIAMETER
10 (250) or greater	1½ (38)
8 (200) thru 9.99 (249)	1¼ (32)
Less than 8 (200)	1 (25)

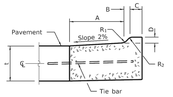

M-2.06 (M-5.15) and M-2.12 (M-5.30)

DATE	REVISIONS
1-1-18	New standard.

CONCRETE CURB TYPE B AND COMBINATION CONCRETE CURB AND GUTTER

(Sheet 1 of 2)

B.L.R. 28

GENERAL NOTES

The bottom slope of combination curb and gutter constructed adjacent to pcc pavement shall be the same slope as the subbase or 6% when subbase is omitted.

t = Pavement thickness.

Longitudinal joint tie bars shall be No. 5 (No. 16) at 24 (600) centers in accordance with details for longitudinal construction joint shown on Standard 420001.

A minimum clearance of 2 (50) between the end of the tie bar and the back of the curb shall be maintained.

The dowel bars shown in contraction joints will only be required for monolithic construction.

See Standard 606301 for details of corner islands except reference to Standard 606001 does not apply.

All dimensions are in inches (millimeters) unless otherwise shown.

Illinois Department of Transportation
PASSED January 1, 2018
ENGINEER OF LOCAL ROADS AND STREETS
APPROVED January 1, 2018
ENGINEER OF DESIGN AND ENVIRONMENT
BLR 10-11-13

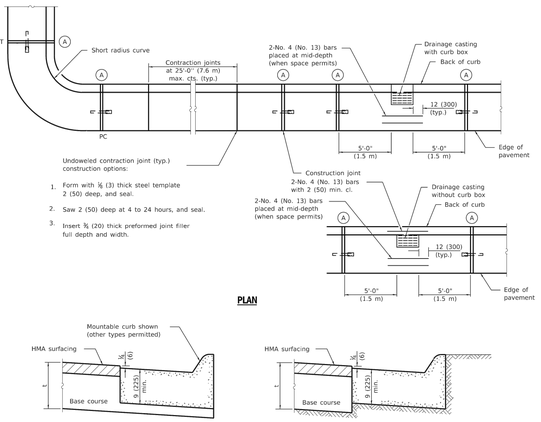

PLAN

ON DISTURBED SUBGRADE

ON UNDISTURBED SUBGRADE

ADJACENT TO FLEXIBLE PAVEMENT

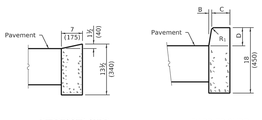

DEPRESSED CURB

BARRIER CURB

ADJACENT TO FLEXIBLE PAVEMENT

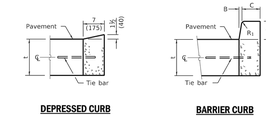

DEPRESSED CURB

BARRIER CURB

ADJACENT TO PCC PAVEMENT OR PCC BASE COURSE

CONCRETE CURB TYPE B

CONCRETE CURB TYPE B AND COMBINATION CONCRETE CURB AND GUTTER

(Sheet 2 of 2)

B.L.R. 28

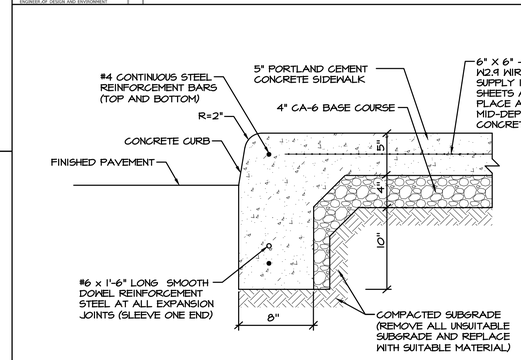

DETAIL - MONOLITHIC CURB AND 5" CONCRETE SIDEWALK

NOT TO SCALE

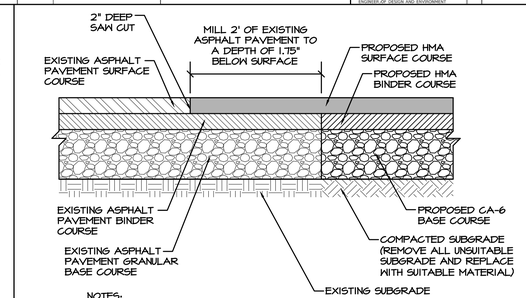

NOTES:

1. EXISTING PAVEMENT SECTION IS SHOWN FOR REFERENCE ONLY.
2. ALL ASPHALT PAVEMENT MILLINGS SHALL BE DISPOSED OF BY THE CONTRACTOR.
3. BITUMINOUS TACK COAT SHALL BE APPLIED AT A RATE OF 0.1 GALLONS PER SQUARE YARD TO BOTH THE EXISTING AND PROPOSED ASPHALT BINDER COURSE PRIOR TO NEW HMA SURFACE COURSE INSTALLATION.

DETAIL - BUTT JOINT

NOT TO SCALE

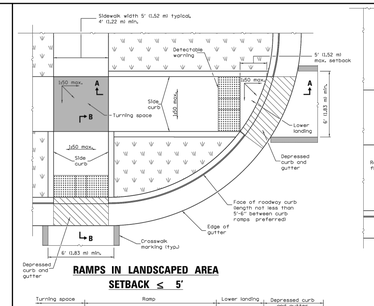

RAMPS IN LANDSCAPED AREA

SETBACK ≤ 5'

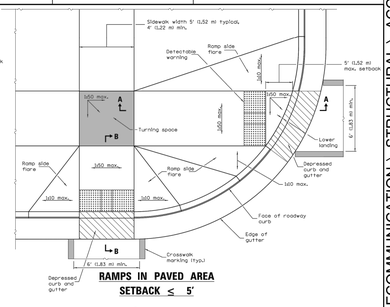

RAMPS IN PAVED AREA

SETBACK ≤ 5'

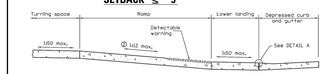

SECTION A-A

② The running slope of the curb ramp shall not require the ramp length to exceed 15' (4.5 m).

SECTION B-B

② The running slope of the curb ramp shall not require the ramp length to exceed 15' (4.5 m).

CONTRACTOR TO USE ADA CAST IRON DETECTABLE PLATES AS MANUFACTURED BY NEENAH FOUNDRY, POWDER COATED BRICK RED

DETAIL A

SIDE CURB DETAIL

Illinois Department of Transportation
PASSED January 1, 2017
ENGINEER OF LOCAL ROADS AND STREETS
APPROVED January 1, 2017
ENGINEER OF DESIGN AND ENVIRONMENT
BLR 10-11-13

See Sheet 2 for GENERAL NOTES.

DATE	REVISIONS
1-1-17	Added 2' dimension to det. warnings for setbacks greater than 5'.
1-1-15	② not appl. to 1ft. sidewalk. Rev. gen. notes. (1)12 slope landing to turning space.

PERPENDICULAR CURB RAMPS FOR SIDEWALKS

(Sheet 1 of 2)

STANDARD 424001-09

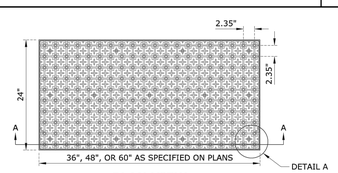

PLAN VIEW

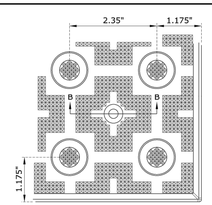

DETAIL A

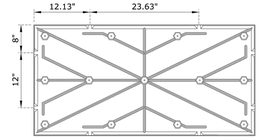

UNDERSIDE VIEW

NOTES:

ALL WARNING PLATES TO BE SIZED ACCORDING TO PLAN SHEETS.

STANDARD COLOR TO BE COLONIAL RED (BROWN); (FED 20109).

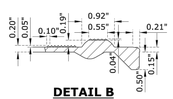

DETAIL B

SECTION A-A

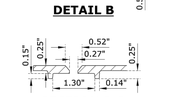

SECTION B-B

CAST IN PLACE REPLACEABLE DETECTABLE WARNING PLATE

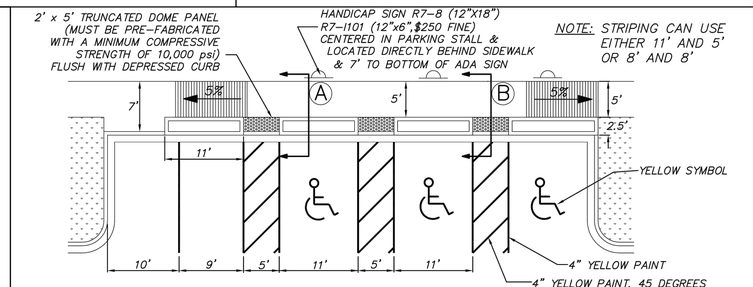

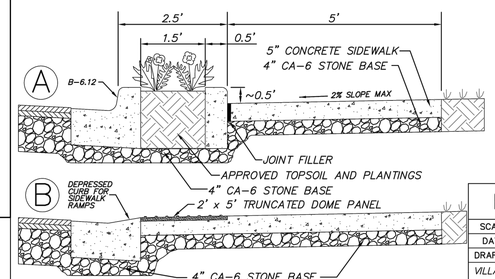

APPROVED PLANT LIST

Scientific Name	Common Name	Size
Deciduous Shrubs		
Caryopteris x clandonensis	Blue Mist Shrub	2 gal
Hypericum kalmianum	Kalm St. Johnswort	2 gal
Potentilla fruticosa 'Pink Beauty'	Pink Beauty Cinquefoil	2 gal
Ribes alpinum 'Pumila'	Dwarf Alpine Currant	2 gal
Spiraea x bumalda 'Magic Carpet'	Magic Carpet Spirea	2 gal
Spiraea japonica 'Mertyann'	Dakota Goldcharm® Spirea	2 gal
Spiraea japonica 'Golden Elf'	Golden Elf Spirea	2 gal
Spiraea japonica 'Lemon Princess'	Lemon Princess Spirea	2 gal
Ornamental Grasses		
Festuca glauca 'Elijah Blue'	Blue Fescue Grass	1 gal
Pennisetum alopecuroides 'Hamelin'	Dwarf Fountain Grass	1 gal

NOTE: PERENNIALS ARE ACCEPTABLE FOR USE. OTHER SPECIES NEED TO BE APPROVED BY THE VILLAGE.

PLANTER BOX DETAIL

SCALE	NONE	NO.	REVISIONS	BY	DATE
DATE	2-26-07	1.	MISC UPDATES	SLW	2/10
DRAFTER	NOR & SW				
VILLAGE OF HOFFMAN ESTATES ENGINEERING DIVISION			FILE NAME: PLANTBOX.DWG	SHEET NO. 1 OF 1	

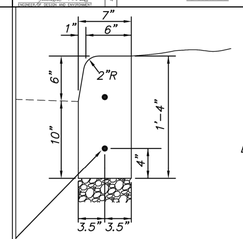

6" BARRIER CURB

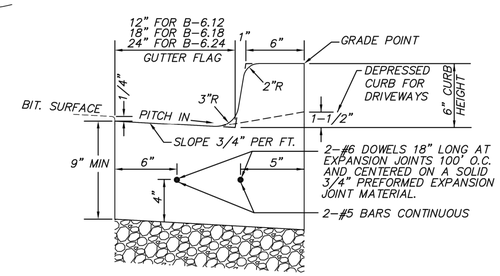

B-6.12 CURB & GUTTER

NOTES:

1. TAPER CURB TO 5'-0" EACH SIDE OF INLET WITH EXPANSION JOINTS.
2. CONTRACTION JOINTS TO BE TOOLED OR SAWCUT EVERY 15' TO A MINIMUM DEPTH OF 1 ½".
3. MINIMUM 4" CA6 CRUSHED STONE BEDDING UNDER ALL CURBS.
4. ONLY CLASS SI CONCRETE SHALL BE USED.
5. DEPRESSED CURB FOR SIDEWALK RAMPS SHALL BE 0.5 INCHES IN HEIGHT.

UTILIZE THIS DETAIL FOR CURB CONSTRUCTION.

ADD #1

CURB DETAILS

SCALE	NONE	NO.	REVISIONS	BY	DATE
DATE	5-25-05	1.	MISC UPDATES	SW	2/10
DRAFTER	SLW				
VILLAGE OF HOFFMAN ESTATES TRANSPORTATION & ENGINEERING DIVISION			FILE NAME: CURBS.DWG	SHEET NO. 1 OF 1	

AQUATIC \ CIVIL \ MECHANICAL \ ELECTRICAL \ PLUMBING \ TELECOMMUNICATION \ STRUCTURAL \ ACCESSIBILITY CONSULTING \ DESIGN & PROGRAM MANAGEMENT \ LAND SURVEY

WT GROUP
Engineering with Precision. Pace and Passion.
2675 Pratum Avenue | Hoffman Estates, IL 60192
T: 224.293.2200 F: 224.293.2220
wtengineering.com
IL License No: 184.007570-0015 Expires 04.30.2021

© COPYRIGHT 2019 THE W-T GROUP, LLC

WT Group
Engineering • Design • Consulting

SOUTH RIDGE COMMUNITY PARK
ENHANCEMENT PLAN 2019
1450 FREEMAN ROAD
HOFFMAN ESTATES, IL 60192

heparks
making life fun

ISSUE

TO	DATE
MWRD	9/17/19
MWRD	10/22/19
VILLAGE	11/25/19
MWRD	1/2/20
SWCD	1/17/20
FOR BID	1/23/20
ADD #1	2/03/20

CHECK: CMS

DRAWN: PS

1911354C

C-4.5
SITE DEVELOPMENT DETAILS

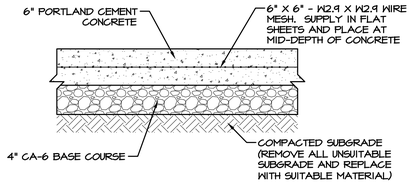

DETAIL - 6" CONCRETE SIDEWALK

NOT TO SCALE

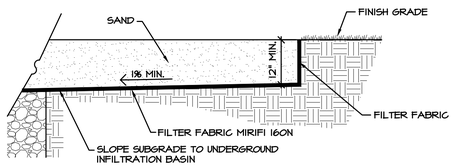

DETAIL - SAND VOLLEYBALL COURT SECTION

NOT TO SCALE

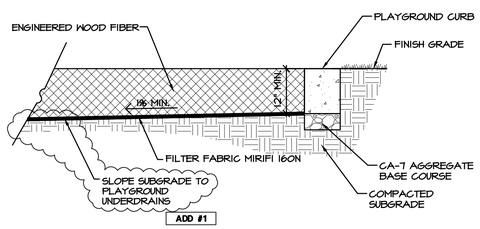

DETAIL - ENGINEERED WOOD FIBER SECTION

NOT TO SCALE

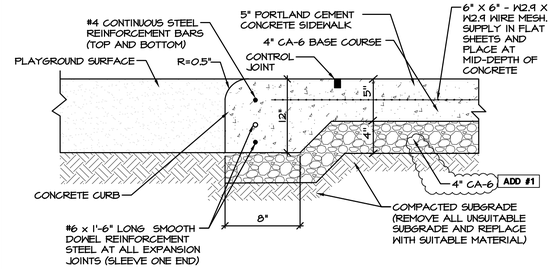

DETAIL - MONOLITHIC PLAYGROUND CURB AND 5" CONCRETE SIDEWALK

NOT TO SCALE

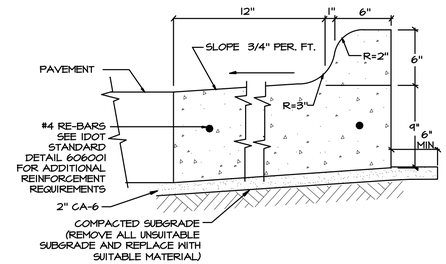

DETAIL-B6-12 CURB & GUTTER (REVERSE GUTTER PITCH)

NOT TO SCALE

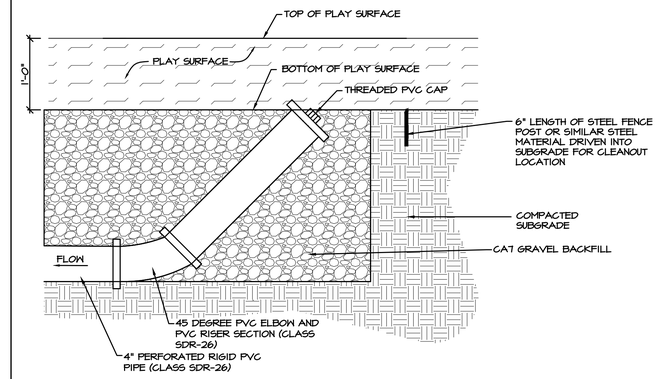

DETAIL - PLAYGROUND CLEAN OUT (WITHIN PLAYGROUND)

NOT TO SCALE

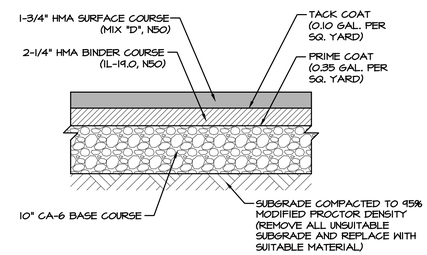

DETAIL - ASPHALT PAVEMENT

NOT TO SCALE

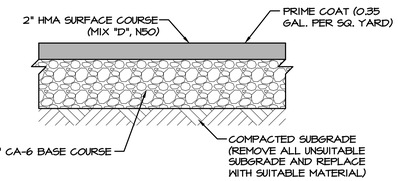

DETAIL - ASPHALT TRAIL

NOT TO SCALE

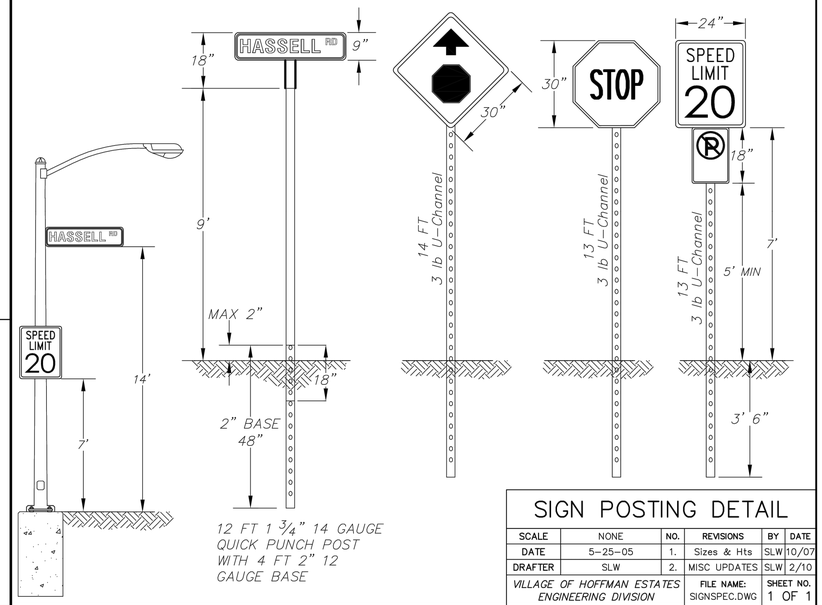

SIGN POSTING DETAIL					
SCALE	NONE	NO.	REVISIONS	BY	DATE
DATE	5-25-05	1.	Sizes & Hts	SLW	10/07
DRAFTER	SLW	2.	MISC UPDATES	SLW	2/10
VILLAGE OF HOFFMAN ESTATES ENGINEERING DIVISION		FILE NAME: SIGNSPEC.DWG		SHEET NO. 1 OF 1	

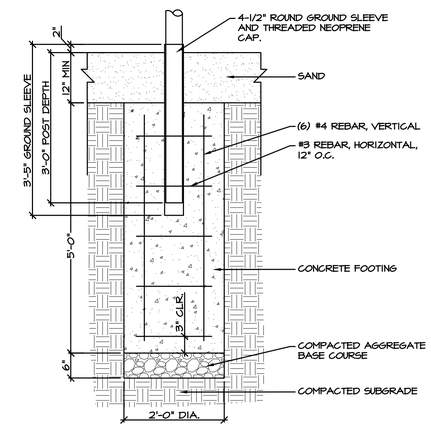

NOTE:
1. EXTEND ALL POSTS AND GROUND SLEEVES TO ACCOMMODATE SAND DEPTH.
2. TOP PORTION OF THE SLEEVE TO BE PANTED YELLOW.

DETAIL - VOLLEYBALL POST FOOTING

NOT TO SCALE

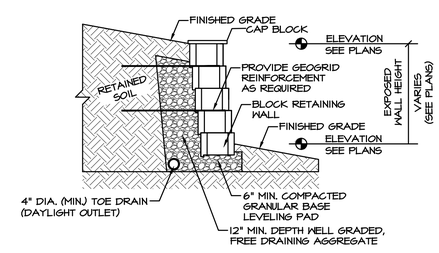

NOTES:

1. DETAIL PROVIDED FOR CROSS SECTION PURPOSES ONLY.
2. REFER TO PLANS FOR RETAINING WALL LOCATIONS AND ELEVATIONS.
3. CONTRACTOR SHALL PROVIDE SHOP DRAWINGS AND CALCULATIONS SIGNED AND SEALED BY AN ILLINOIS LICENSED STRUCTURAL ENGINEER PRIOR TO CONSTRUCTION.
4. CONTRACTOR SHALL INSTALL RETAINING WALL IN ACCORDANCE WITH APPROVED MANUFACTURER'S GUIDELINES AND SPECIFICATIONS.
5. RETAINING ALL SHALL BE AULTWALL BY READING ROCK OVERSIZED BEVELED FACE RETAINING WALL. CONTRACTOR SHALL PROVIDE RETAINING WALL MATERIAL SAMPLES TO THE OWNER, ARCHITECT AND/OR ENGINEER FOR APPROVAL AND COLOR SELECTION PRIOR TO CONSTRUCTION.

DETAIL - RETAINING WALL

NOT TO SCALE

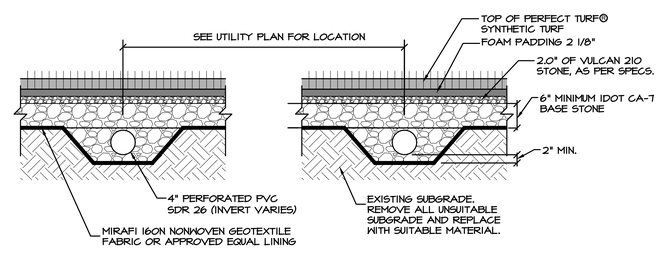

DETAIL - UNDERDRAIN BELOW SYNTHETIC TURF PLAYGROUND AND FITNESS AREA

NOT TO SCALE

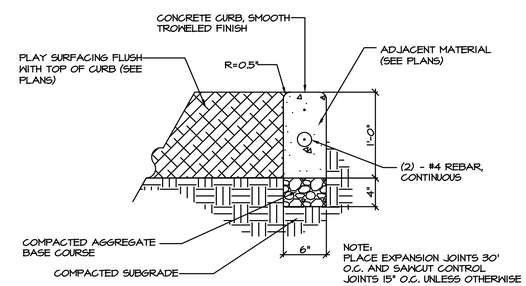

PLAYGROUND CURB

NOT TO SCALE

AQUATIC \ CIVIL \ MECHANICAL \ ELECTRICAL \ PLUMBING \ TELECOMMUNICATION \ STRUCTURAL \ ACCESSIBILITY CONSULTING \ DESIGN & PROGRAM MANAGEMENT \ LAND SURVEY

WT GROUP
Engineering with Precision. Place and Passion.
2675 Pratum Avenue | Hoffman Estates, IL 60192
T: 224.293.0300 F: 224.293.0303
wtengineering.com
IL License No: 184.007570-0015 Expires: 04.30.2021

© COPYRIGHT 2019 THE W-T GROUP, LLC

WT Group
Engineering • Design • Consulting

SOUTH RIDGE COMMUNITY PARK
ENHANCEMENT PLAN 2019
1450 FREEMAN ROAD
HOFFMAN ESTATES, IL 60192

heparks
making life fun.

ISSUE

TO	DATE
MWRD	9/17/19
MWRD	10/22/19
VILLAGE	11/25/19
MWRD	1/2/20
SWCD	1/17/20
FOR BID	1/23/20
ADD #1	2/03/20

CHECK: CMS
DRAWN: PS
1911354C

C-4.6
SITE DEVELOPMENT DETAILS

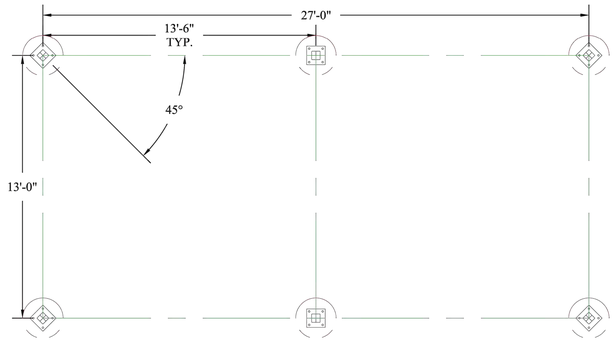

SHELTER BY SUPERIOR RECREATIONAL PRODUCTS	DESCRIPTION: 16'x30' (AS) Hip End Structure	DATE 6/4/2019	DRAWN BY J.C.	*These drawings are for reference only and should not be used as construction details. They show the general character and rough dimensions of the structural features. Exact spans, fasteners, materials, and foundations can be determined by a licensed structural engineer upon request.*
	QUOTE #: QU0181204 / PROJECT NAME: Hoffman Estates Park District	SCALE NOT TO SCALE	SHEET 3. of 5.	

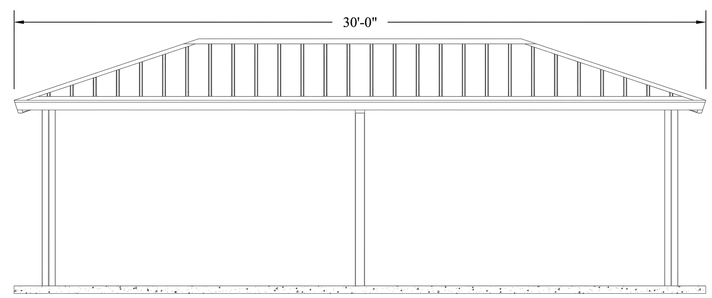

SHELTER BY SUPERIOR RECREATIONAL PRODUCTS	DESCRIPTION: 16'x30' (AS) Hip End Structure	DATE 6/4/2019	DRAWN BY J.C.	*These drawings are for reference only and should not be used as construction details. They show the general character and rough dimensions of the structural features. Exact spans, fasteners, materials, and foundations can be determined by a licensed structural engineer upon request.*
	QUOTE #: QU0181204 / PROJECT NAME: Hoffman Estates Park District	SCALE NOT TO SCALE	SHEET 2. of 5.	

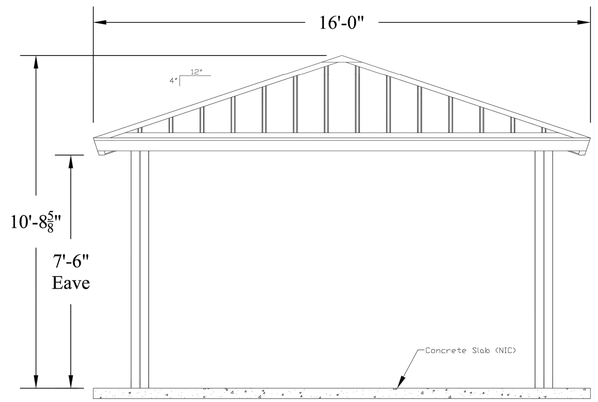

SHELTER BY SUPERIOR RECREATIONAL PRODUCTS	DESCRIPTION: 16'x30' (AS) Hip End Structure	DATE 6/4/2019	DRAWN BY J.C.	*These drawings are for reference only and should not be used as construction details. They show the general character and rough dimensions of the structural features. Exact spans, fasteners, materials, and foundations can be determined by a licensed structural engineer upon request.*
	QUOTE #: QU0181204 / PROJECT NAME: Hoffman Estates Park District	SCALE NOT TO SCALE	SHEET 1. of 5.	

GENERAL MATERIAL SPECIFICATIONS & NOTES:

1. ALL STRUCTURAL STEEL TUBING SHALL BE ASTM A-500 GRADE B-C.
2. ALL OTHER STEEL (PLATES,GUSSETS,ETC.) SHALL BE ASTM A-36.
3. ALL WELDING IS TO BE DONE IN ACCORDANCE WITH LATEST AWS STANDARDS. ALL WELDS ARE TO DEVELOP FULL STRENGTH OF COMPONENT PARTS. (E17081 ELECTRODES)
4. INCLUDED HARDWARE IS TO BE ASTM A-325 UNLESS OTHERWISE NOTED.
5. PRODUCTION OF LAMINATED MATERIALS WILL BE IN ACCORDANCE WITH THE AMERICAN NATIONAL STANDARD ANSI A190.1 *STRUCTURAL GLUED LAMINATED TIMBER.*
6. IF INCLUDED TONGUE & GROOVE WILL BE #1 Grade V-GROOVED SYP CONTAINING 15-20% MOISTURE CONTENT.
7. POWDER COATING PROCESS
   STAGE 1 - Blast all steel to "Near White" condition to remove all surface rust and oil.
   STAGE 2 - Remove dust from the blast process in stage 1.
   STAGE 3- This stage is the Electrostatic Application of Epoxy TGIC Powder Coating Zinc Rich Primer. Unlike any other shelter manufacturer, we are utilizing an actual TGIC Zinc Powder Coating Rich Primer. This stage 3 application is applied at 3 mils and has been salt spray tested for 4,000 + hours using the ASTM Method B117. (Note: The 4,000 hours of salt spray testing is only with the Zinc Rich TGIC Powder Coat Primer and before the Stage 5.
   STAGE 4- This process heats the steel and primer to ensure optimal adhesion with the next stage.
   STAGE 5- This stage is the Electrostatic application of TGIC Top Powder Coat at 3 mils. This application, along with the Stage 4 Epoxy TGIC Powder Coating Zinc Rich Primer, produces a total of 6 mils of finished Powder Coating and has tested at 5,000+ hours using the ASTM Method B117. It is important to note that testing was discontinued at 5,000 hours.
   STAGE 6- Curing Process: The final stage is to allow coated components the time to cure by cooling down.
8. IF INCLUDED METAL ROOFING IS TO BE ACRYLIC COATED GALVALUME® FLUROPOLYMER (Kynar 500® PVDF resin-based). ALL METAL ROOFING WILL COME PRE-CUT UNLESS NOTED OTHERWISE. METAL ROOFING TRIMS WILL COME IN STANDARD SECTIONS AND WILL REQUIRE NOTCHING OR CUTTING IN FIELD.

GENERAL NOTES:

- UNLESS REQUESTED THIS BUILDING HAS BEEN DESIGNED AS A FREE STANDING, OPEN STRUCTURE. IF WALLS ARE TO BE ADDED, OR IF THE BUILDING IS TO ADJOIN ANOTHER STRUCTURE, OR IF OTHER MODIFICATIONS ARE TO BE MADE, THE STRUCTURE MUST BE REENGINEERED PRIOR TO THESE MODIFICATIONS.
- IF SPECIFICATIONS ARE PROVIDED ALL DESIGNS ARE TO BE CONSIDERED TO BE AS EQUAL AND NOT AN EXACT MATCH. DESIGNS WILL CONFORM TO SRPS MANUFACTURING METHODS AND MATERIALS AVAILABLE.

ABBREVIATIONS:

- AS - ALL STEEL
- SF - STEEL FRAME
- DT- DUO-TOP
- T&G - TONGUE & GROOVE
- NIC - NOT IN CONTRACT
- O.C. - ON CENTER
- TYP - TYPICAL

SHELTER BY SUPERIOR RECREATIONAL PRODUCTS	DESCRIPTION: 16'x30' (AS) Hip End Structure	DATE 6/4/2019	DRAWN BY J.C.	*These drawings are for reference only and should not be used as construction details. They show the general character and rough dimensions of the structural features. Exact spans, fasteners, materials, and foundations can be determined by a licensed structural engineer upon request.*
	QUOTE #: QU0181204 / PROJECT NAME: Hoffman Estates Park District	SCALE NOT TO SCALE	SHEET 5. of 5.	

FOUNDATION NOTE:
All foundation design information should be considered as preliminary only. A local soils engineer shall be retained to design the foundation according to local conditions and codes.
Final design of the footing/foundation is the responsibility of the general contractor/owner.
SRP's anaylysis and design will pertaion strictly to a pier foundation to adaquatly support structures. All other foundation/masonary design requirements by others

MISC. INFORMATION:

- Any unique design requirements should be mentioned up front during quoting or prior to purchasing sealed drawings.
- If available providing a soils report with the purchase of the sealed drawings may help to reduce footer requirements.
- SRP utilizes cylindrical footer designs as an industry standard. If specifically requested or special conditions require, SRP will provide spread footer designs.
- Epoxy analysis designs will require seperate fees upon request.
- As a safe practice it is suggested to acquire sealed drawings prior to purchase of structures.

CONTRACTOR SHALL PROVIDE STRUCTURAL ENGINEERING DESIGN OF SHELTER FROM SHELTER MANUFACTURER.
ADD #1

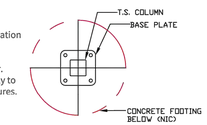

COLUMN BASE-PLATE PLAN

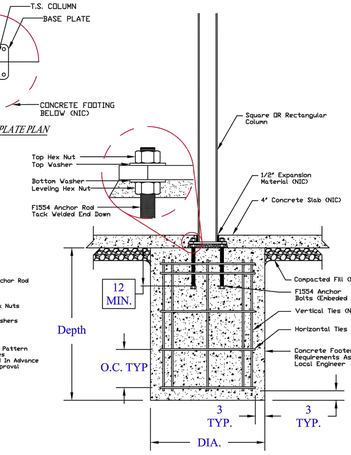

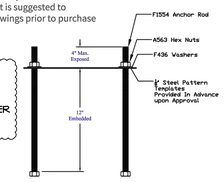

TEMPLATE ASSEMBLY (NTS)

SHELTER BY SUPERIOR RECREATIONAL PRODUCTS	DESCRIPTION: 16'x30' (AS) Hip End Structure	DATE 6/4/2019	DRAWN BY J.C.	*These drawings are for reference only and should not be used as construction details. They show the general character and rough dimensions of the structural features. Exact spans, fasteners, materials, and foundations can be determined by a licensed structural engineer upon request.*
	QUOTE #: QU0181204 / PROJECT NAME: Hoffman Estates Park District	SCALE NOT TO SCALE	SHEET 4. of 5.	

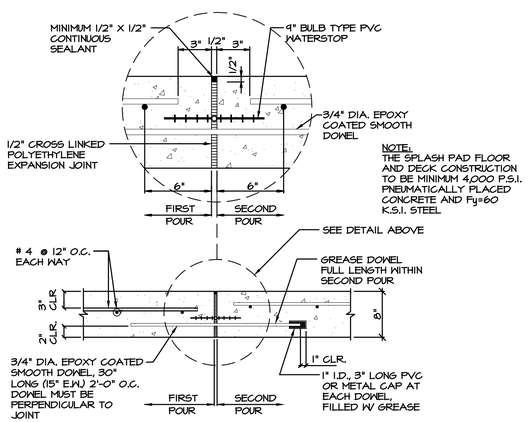

DETAIL - SPLASH PAD EXPANSION JOINT DETAIL

NOT TO SCALE

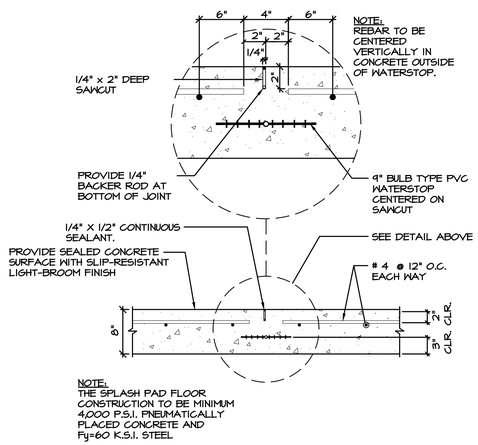

DETAIL - SPLASH PAD CONTROL JOINT DETAIL

NOT TO SCALE

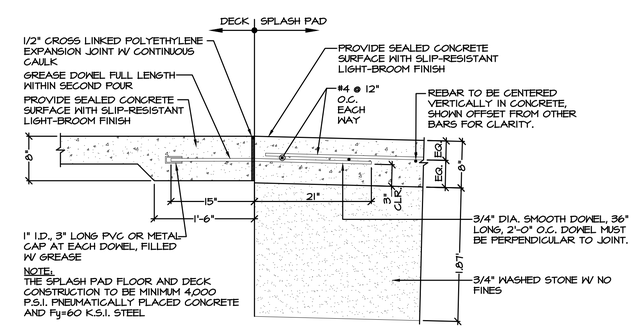

DETAIL - SPLASH PAD EXPANSION JOINT DETAIL

NOT TO SCALE

AQUATIC \ CIVIL \ MECHANICAL \ ELECTRICAL \ PLUMBING \ TELECOMMUNICATION \ STRUCTURAL \ ACCESSIBILITY CONSULTING \ DESIGN & PROGRAM MANAGEMENT \ LAND SURVEY

WT GROUP
Engineering with Precision, Pace and Passion.
2675 Pratum Avenue | Hoffman Estates, IL 60192
T: 224.293.0503 F: 224.293.0444
wtengineering.com
IL License No: 184.007570-0015 Expires: 04.30.2021

© COPYRIGHT 2019 THE W-T GROUP, LLC

WT Group
Engineering • Design • Consulting

SOUTH RIDGE COMMUNITY PARK
ENHANCEMENT PLAN 2019
1450 FREEMAN ROAD
HOFFMAN ESTATES, IL 60192

heparks making life fun

ISSUE

TO	DATE
MWRD	9/17/19
MWRD	10/22/19
VILLAGE	11/25/19
MWRD	1/2/20
SWCD	1/17/20
FOR BID	1/23/20
ADD #1	2/03/20

CHECK: CMS
DRAWN: PS
1911354C

C-4.8
SITE DEVELOPMENT DETAILS

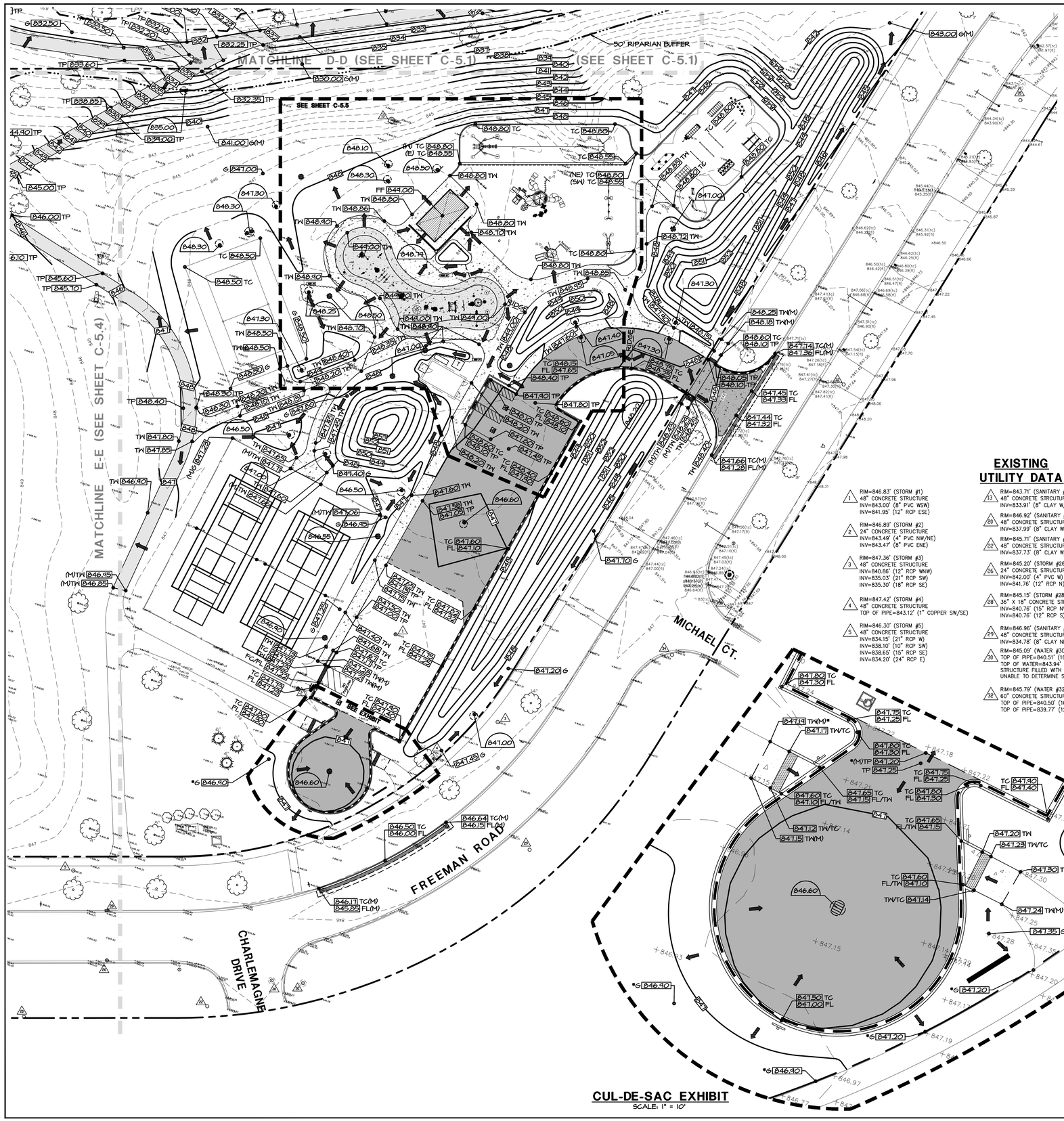

GRADING LEGEND

- EXISTING SPOT GRADE
- PROPOSED SPOT GRADE
- PROPOSED RIM ELEVATION
- EXISTING CONTOUR LINE
- PROPOSED CONTOUR LINE
- OVERLAND FLOW ARROW
- 100 YEAR OVERLAND FLOW ROUTE
- EMERGENCY OVERFLOW ARROW
- TP — TOP OF PAVEMENT ELEVATION
- TW — TOP OF SIDEWALK ELEVATION
- G — FINISHED GRADE ELEVATION
- FF — FINISHED FLOOR ELEVATION
- TC — TOP OF CURB ELEVATION
- FL — FLOW LINE ELEVATION
- ADJUST — ADJUST EXISTING RIM ELEVATION
- GB — GRADE BREAK
- (M) — MATCH EXISTING ELEVATION
- INTERPOLATED SPOT GRADE
- EXISTING MANHOLE
- EXISTING WATER STRUCTURE
- EXISTING FIRE HYDRANT
- EXISTING B-BOX
- EXISTING FLARED END SECTION
- PROPOSED FIRE HYDRANT
- PROPOSED VALVE WITH VAULT
- PROPOSED B-BOX
- PROPOSED INLET
- PROPOSED CATCH BASIN
- PROPOSED CLOSED LID MANHOLE
- NORMAL WATER LEVEL
- WETLAND BOUNDARY
- 50' RIPARIAN BUFFER

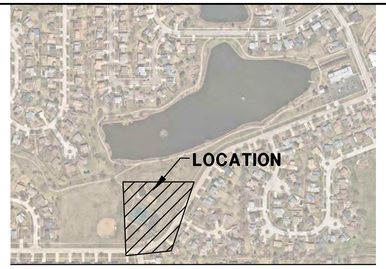

KEYMAP

SCALE: N.T.S.

NORTH

HATCH LEGEND

- NEW ASPHALT TRAIL — 2" HMA SURFACE COURSE, 8" CA-6 BASE COURSE
- NEW ROADWAY PAVEMENT TO MATCH EXISTING CROSS SECTION
- NEW 5" CONCRETE SIDEWALK — 5" PORTLAND CEMENT CONCRETE, 4" CA-6 BASE COURSE
- NEW 6" CONCRETE PAVEMENT — 6" PORTLAND CEMENT CONCRETE, 4" CA-6 BASE COURSE
- NEW ASPHALT PAVEMENT — 1-3/4" HMA SURFACE COURSE, 2-1/4" HMA BINDER COURSE, 10" CA-6 BASE COURSE
- NEW 1-3/4" ASPHALT MILL & OVERLAY — SEE DETAIL
- NEW CONCRETE SPLASH PAD

EXISTING UTILITY DATA

1. RIM=846.83' (STORM #1) 48" CONCRETE STRCUTURE INV=843.00' (8" PVC WSW) INV=841.95' (12" RCP ESE)
2. RIM=846.89' (STORM #2) 24" CONCRETE STRUCTURE INV=843.49' (4" PVC NW/NE) INV=843.47' (8" PVC ENE)
3. RIM=847.36' (STORM #3) 48" CONCRETE STRUCTURE INV=840.86' (12" RCP WNW) INV=835.03' (21" RCP SW) INV=835.30' (18" RCP SE)
4. RIM=847.42' (STORM #4) 48" CONCRETE STRUCTURE TOP OF PIPE=843.12' (1" COPPER SW/SE)
5. RIM=846.30' (STORM #5) 48" CONCRETE STRUCTURE INV=834.15' (21" RCP W) INV=838.10' (10" RCP SW) INV=838.65' (15" RCP SE) INV=834.20' (24" RCP E)
13. RIM=843.71' (SANITARY #13) 48" CONCRETE STRCUTURE INV=833.91' (8" CLAY W/E)
20. RIM=846.92' (SANITARY #20) 48" CONCRETE STRUCTURE INV=837.99' (8" CLAY WNW/E)
22. RIM=845.71' (SANITARY #22) 48" CONCRETE STRUCTURE INV=837.73' (8" CLAY W/S)
26. RIM=845.20' (STORM #26) 24" CONCRETE STRUCTURE INV=842.00' (4" PVC W) INV=841.76' (12" RCP N)
28. RIM=845.15' (STORM #28) 36" X 18" CONCRETE STRUCTURE INV=840.76' (15" RCP NW) INV=840.76' (12" RCP S)
29. RIM=846.96' (SANITARY #29) 48" CONCRETE STRUCTURE INV=834.78' (8" CLAY NE)
30. RIM=845.09' (WATER #30) TOP OF PIPE=840.51' (16" DIP E/W) TOP OF WATER=843.94' STRUCTURE FILLED WITH WATER UNABLE TO DETERMINE SIZE OF STRUCTURE
32. RIM=845.79' (WATER #32) 60" CONCRETE STRUCTURE TOP OF PIPE=840.50' (16" DIP E/W) TOP OF PIPE=839.77' (12" DIP S)
33. RIM=847.50' (SANITARY #33) 48" CONCRETE STRUCTURE INV=833.33' (8" CLAY SSW) INV=833.33' (8" PVC NNE)
34. RIM=846.77' (SANITARY #34) 48" CONCRETE STRUCTURE INV=834.19' (8" CLAY SW/NE/ESE)
35. RIM=843.87' (SANITARY #35) 48" CONCRETE STRUCTURE INV=832.52' (8" CLAY WNW/NE/ESE/SSW)
38. RIM=847.08' (WATER #38) TOP OF PIPE=840.91' (DIP ESE) TOP OF WATER=844.04' STRUCTURE FILLED WITH WATER UNABLE TO REACH NE/SW LINE
40. RIM=842.44' (STORM #40) 24" CONCRETE STRUCTURE INV=839.47' (12" RCP NNW)
42. RIM=859.28' (WATER #42) 60" CONCRETE STRUCTURE TOP OF BELL=852.38' (DIP E/W) UNABLE TO MEASURE SIZE OF PIPE

SITE GRADING NOTES:

A. EXISTING CONDITIONS AND TOPOGRAPHY SHOWN REPRESENTS SITE CONDITIONS PER THE PLAT OF SURVEY LAST DATED 6-16-2004, PREPARED BY ENGINEERING RESOURCE ASSOCIATES INC. CONTRACTOR SHALL FIELD VERIFY EXISTING ELEVATIONS AND CONDITIONS (INCLUDING BUT NOT LIMITED TO VERIFICATION OF CONTROL AND ALL UTILITIES WHETHER DEPICTED OR NOT) PRIOR TO CONSTRUCTION AND NOTIFY ENGINEER OF ANY DISCREPANCIES.

AA. ADDITIONAL EXISTING TOPOGRAPHY AND UTILITY DATA SHOWN REPRESENTS SITE CONDITIONS MEASURED BY WT LAND SURVEYING INC. ON 7-24-14.

B. ALL PROPOSED GRADES ARE GIVEN TO FINISHED GRADE, I.E. TOP OF PROPOSED ASPHALT, CONCRETE, TOP OF PROPOSED CURB, ETC. SEE DETAIL5 FOR PAVEMENT THICKNESS.

C. CONTRACTOR SHALL CONTACT J.U.L.I.E. (811 OR 1-800-892-0123) AND PRIVATE LOCATING SERVICE TO LOCATE ALL UNDERGROUND UTILITY LINES PRIOR TO STARTING ANY DEMOLITION AND/OR EXCAVATION. EXACT LOCATIONS OF ANY EXISTING ELECTRIC, GAS, TELEPHONE, ETC. LINES ARE UNKNOWN.

D. CONTRACTOR SHALL ENSURE POSITIVE SITE DRAINAGE AT THE END OF EACH WORKING DAY DURING CONSTRUCTION OPERATIONS. FAILURE TO PROVIDE ADEQUATE DRAINAGE WILL PRECLUDE THE CONTRACTOR FROM ANY POSSIBLE COMPENSATION REQUESTED DUE TO DELAYS OR UNSUITABLE MATERIALS CREATED AS A RESULT.

E. CONTRACTOR SHALL RESTORE ALL DISTURBED AREAS OUTSIDE OF CONSTRUCTION LIMITS TO ORIGINAL CONDITION OR BETTER.

F. CONTRACTOR SHALL REPAIR AT HIS EXPENSE ANY DAMAGE TO EXISTING ASPHALT, CONCRETE, CURBS, SIDEWALKS, ETC. RESULTING FROM CONSTRUCTION TRAFFIC AND/OR OPERATIONS. REPAIRS SHALL BE MADE TO THE SATISFACTION OF THE OWNER AND/OR ENGINEER.

G. CONTRACTOR TO UTILIZE CARE WHEN WORKING NEAR EXISTING UTILITIES TO REMAIN. ANY DAMAGE TO EXISTING UTILITIES NOT NOTED TO BE REMOVED SHALL BE REPAIRED AT CONTRACTOR'S EXPENSE TO THE SATISFACTION OF THE OWNER AND/OR ENGINEER.

H. ALL EXISTING TREES SHOWN ARE TO REMAIN UNLESS OTHERWISE NOTED.

I. ALL HANDICAP ACCESSIBLE ROUTES (SIDEWALKS, WALKWAYS, PAVEMENTS, ETC.) SHALL MAINTAIN A MAXIMUM CROSS SLOPE OF 2.00% AND A MAXIMUM LONGITUDINAL SLOPE OF 5.00%. ACCESSIBLE PARKING STALLS SHALL MAINTAIN A MAXIMUM SLOPE OF 2.00% IN ALL DIRECTIONS.

J. VOIDS LEFT BY ANY ITEM REMOVED UNDER ANY PROPOSED BUILDING, PAVEMENT, OR WALK OR WITHIN 24" THEREOF SHALL BE BACKFILLED WITH ENGINEERED FILL ACCORDING TO THE GEOTECHNICAL REPORT.

K. ALL FIRE ACCESS LANES WITHIN THE PROJECT AREA SHALL REMAIN IN SERVICE, CLEAN OF DEBRIS, AND ACCESSIBLE FOR USE BY EMERGENCY VEHICLES.

L. CONSTRUCTION ACCESS POINTS TO THE SITE SHALL BE PROTECTED IN SUCH A WAY AS TO PREVENT TRACKING OF MUD OR SOIL ONTO PUBLIC THOROUGHFARES. ALL SEDIMENT SPILLED, DROPPED, WASHED OR TRACKED ONTO PUBLIC RIGHTS-OF-WAY MUST BE REMOVED IMMEDIATELY BY THE CONTRACTOR.

M. ALL EXISTING SUBGRADE TO BE SCARIFIED (DISKED) TO A DEPTH OF 12" AND RE-COMPACTED, AND THEN TESTED USING A DYNAMIC CONE PENETROMETER. SEE GEOTECHNICAL REPORT FOR ADDITIONAL REQUIREMENTS.

N. ALL EXCESS SOILS THAT CANNOT BE USED AS SUITABLE FILL SHALL BE HAULED FROM THE SITE AND LEGALLY DISPOSED OF.

O. CONTRACTOR TO PROVIDE SOIL TESTING SERVICES FOR COMPLETION OF THE ILLINOIS ENVIRONMENTAL PROTECTION AGENCY'S LPC-662 AND/OR LPC-663 FORMS AS PART OF THEIR CONTRACT.

P. PREPARE SUBGRADE AS SPECIFIED WITHIN THE GEOTECHNICAL REPORT DATED JULY 23, 2019 PREPARED BY ILLINOIS DRILLING & TESTING CO., INC.

Q. ALL TOPSOIL BENEATH PROPOSED STRUCTURES AND PAVEMENT SHALL BE REMOVED. REFER TO THE GEOTECHNICAL REPORT DATED JULY 23, 2019 PREPARED BY ILLINOIS DRILLING & TESTING CO., INC FOR EXISTING TOPSOIL DEPTHS.

R. ALL INTERSECTIONS OR CHANGES IN DIRECTION ON HANDICAP ACCESSIBLE ROUTES (SIDEWALKS, WALKWAYS, PAVEMENTS, ETC.) SHALL MAINTAIN A MAXIMUM SLOPE OF 2.00% IN ALL DIRECTIONS.

S. THE CONTRACTOR SHALL PLAN TO HAUL UP TO 600 CUBIC YARDS OF CLEAN TOPSOIL TO THE PARK DISTRICT MAINTENANCE FACILITY LOCATED AT 1450 POPLAR CREEK DRIVE IN HOFFMAN ESTATES, IL. ADD #1

NORTH

1" = 30'

00 15 30 60 120

AQUATIC \ CIVIL \ MECHANICAL \ ELECTRICAL \ PLUMBING \ TELECOMMUNICATION \ STRUCTURAL \ ACCESSIBILITY CONSULTING \ DESIGN & PROGRAM MANAGEMENT \ LAND SURVEY

WT GROUP
Engineering with Precision, Place and Passion.
2675 Pratum Avenue | Hoffman Estates, IL 60192
T: 847.695.9300 F: 847.695.9301 T: 224.293.0444
wtengineering.com IL License No: 184.007570-0015 Expires: 04.30.2021
© COPYRIGHT 2019 THE W-T GROUP, LLC

WT Group
Engineering • Design • Consulting

SOUTH RIDGE COMMUNITY PARK
ENHANCEMENT PLAN 2019
1450 FREEMAN ROAD
HOFFMAN ESTATES, IL 60192

heparks
making life fun

ISSUE

TO	DATE
MWRD	9/17/19
MWRD	10/22/19
VILLAGE	11/25/19
MWRD	1/2/20
SWCD	1/17/20
FOR BID	1/23/20
ADD #1	2/03/20

CHECK: CMS

DRAWN: PS

1911354C

C-5.0
SITE GRADING PLAN

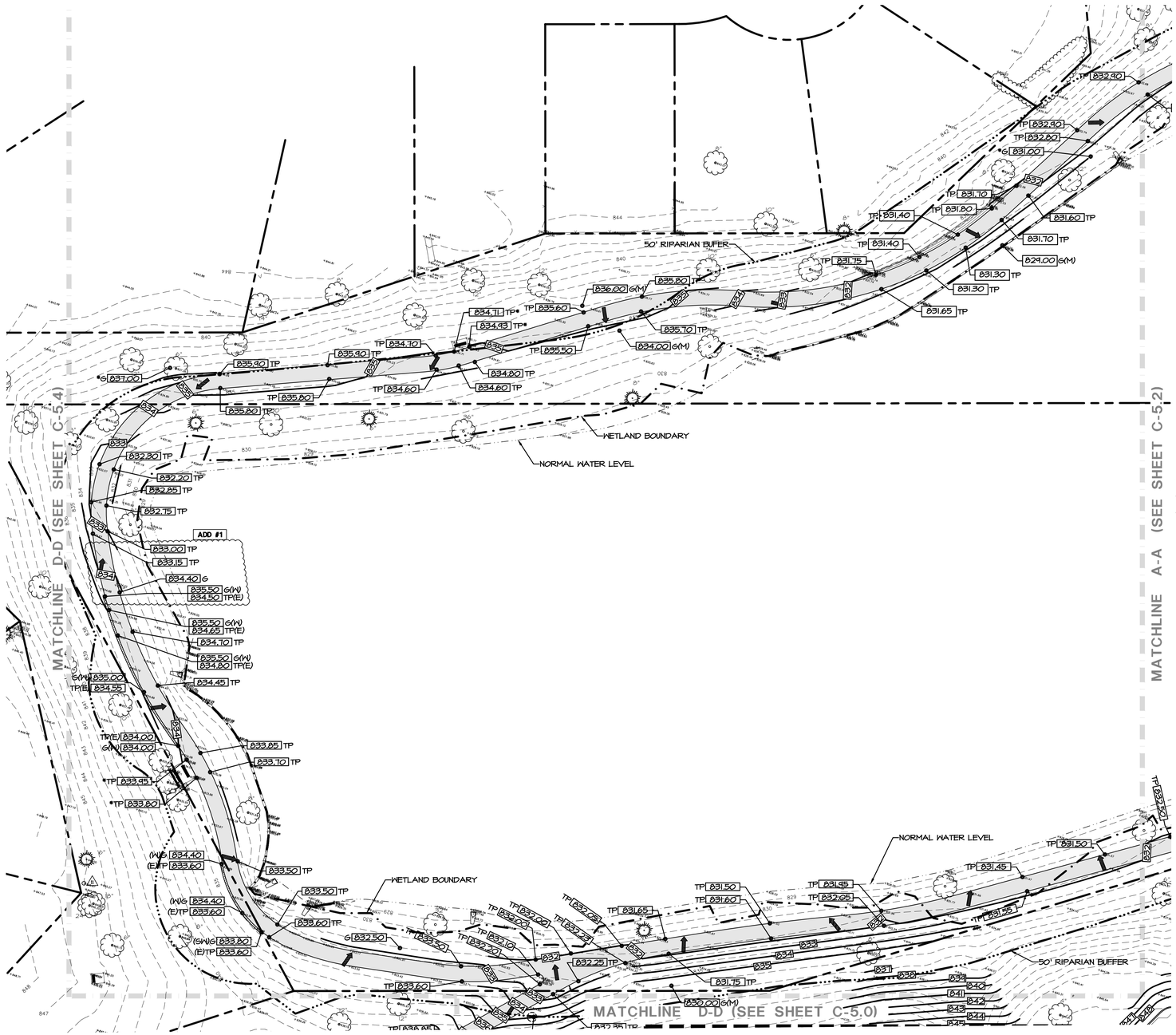

GRADING LEGEND

- EXISTING SPOT GRADE
- PROPOSED SPOT GRADE
- PROPOSED RIM ELEVATION
- EXISTING CONTOUR LINE
- PROPOSED CONTOUR LINE
- OVERLAND FLOW ARROW
- 100 YEAR OVERLAND FLOW ROUTE
- EMERGENCY OVERFLOW ARROW
- TP — TOP OF PAVEMENT ELEVATION
- TW — TOP OF SIDEWALK ELEVATION
- G — FINISHED GRADE ELEVATION
- FF — FINISHED FLOOR ELEVATION
- TC — TOP OF CURB ELEVATION
- FL — FLOW LINE ELEVATION
- ADJUST — ADJUST EXISTING RIM ELEVATION
- GB — GRADE BREAK
- (M) — MATCH EXISTING ELEVATION
- INTERPOLATED SPOT GRADE
- EXISTING MANHOLE
- EXISTING WATER STRUCTURE
- EXISTING FIRE HYDRANT
- EXISTING B-BOX
- EXISTING FLARED END SECTION
- PROPOSED FIRE HYDRANT
- PROPOSED VALVE WITH VAULT
- PROPOSED B-BOX
- PROPOSED INLET
- PROPOSED CATCH BASIN
- PROPOSED CLOSED LID MANHOLE
- NORMAL WATER LEVEL
- WETLAND BOUNDARY
- 50' RIPARIAN BUFFER

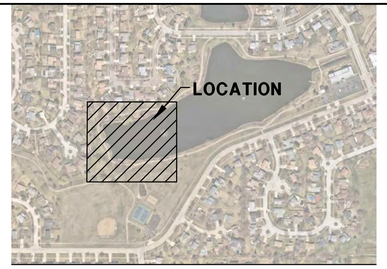

KEYMAP

SCALE: N.T.S.

NORTH

HATCH LEGEND

- NEW ASPHALT TRAIL — 2" HMA SURFACE COURSE, 8" CA-6 BASE COURSE
- NEW ROADWAY PAVEMENT TO MATCH EXISTING CROSS SECTION
- NEW 5" CONCRETE SIDEWALK — 5" PORTLAND CEMENT CONCRETE, 4" CA-6 BASE COURSE
- NEW 6" CONCRETE PAVEMENT — 6" PORTLAND CEMENT CONCRETE, 4" CA-6 BASE COURSE
- NEW ASPHALT PAVEMENT — 1-3/4" HMA SURFACE COURSE, 2-1/4" HMA BINDER COURSE, 10" CA-6 BASE COURSE
- NEW 1-3/4" ASPHALT MILL & OVERLAY — SEE DETAIL
- NEW CONCRETE SPLASH PAD

EXISTING UTILITY DATA

1. RIM=846.83' (STORM #1)
48" CONCRETE STRUCTURE
INV=843.00' (8" PVC W,SW)
INV=841.95' (12" RCP ESE)

2. RIM=846.89' (STORM #2)
24" CONCRETE STRUCTURE
INV=843.49' (4" PVC NW/NE)
INV=843.47' (8" PVC ENE)

3. RIM=847.36' (STORM #3)
48" CONCRETE STRUCTURE
INV=840.86' (12" RCP WNW)
INV=835.03' (21" RCP SW)
INV=835.30' (18" RCP SE)

4. RIM=847.42' (STORM #4)
48" CONCRETE STRUCTURE
TOP OF PIPE=843.12' (1" COPPER SW/SE)

5. RIM=846.30' (STORM #5)
48" CONCRETE STRUCTURE
INV=834.15' (21" RCP W)
INV=838.10' (10" RCP SW)
INV=838.65' (15" RCP SE)
INV=834.20' (24" RCP E)

13. RIM=843.71' (SANITARY #13)
48" CONCRETE STRCUTURE
INV=833.91' (8" CLAY W/E)

20. RIM=846.92' (SANITARY #20)
48" CONCRETE STRUCTURE
INV=837.99' (8" CLAY WNW/E)

22. RIM=845.71' (SANITARY #22)
48" CONCRETE STRUCTURE
INV=837.73' (8" CLAY W/S)

26. RIM=845.20' (STORM #26)
24" CONCRETE STRUCTURE
INV=842.00' (4" PVC W)
INV=841.76' (12" RCP N)

28. RIM=845.15' (STORM #28)
36" X 18" CONCRETE STRUCTURE
INV=840.76' (15" RCP NW)
INV=840.76' (12" RCP S)

29. RIM=846.96' (SANITARY #29)
48" CONCRETE STRUCTURE
INV=834.78' (8" CLAY NE)

30. RIM=845.09' (WATER #30)
TOP OF PIPE=840.51' (16" DIP E/W)
TOP OF WATER=843.94'
STRUCTURE FILLED WITH WATER
UNABLE TO DETERMINE SIZE OF STRUCTURE

32. RIM=845.79' (WATER #32)
60" CONCRETE STRUCTURE
TOP OF PIPE=840.50' (16" DIP E/W)
TOP OF PIPE=839.77' (12" DIP S)

33. RIM=847.50' (SANITARY #33)
48" CONCRETE STRUCTURE
INV=833.33' (8" CLAY SSW)
INV=833.33' (8" PVC NNE)

34. RIM=846.77' (SANITARY #34)
48" CONCRETE STRUCTURE
INV=834.19' (8" CLAY SW/NE/ESE)

35. RIM=843.87' (SANITARY #35)
48" CONCRETE STRUCTURE
INV=832.52' (8" CLAY WNW/NE/ESE/SSW)

38. RIM=847.08' (WATER #38)
TOP OF PIPE=840.91' (DIP ESE)
TOP OF WATER=844.04'
STRUCTURE FILLED WITH WATER
UNABLE TO REACH NE/SW LINE

40. RIM=842.44' (STORM #40)
24" CONCRETE STRUCTURE
INV=839.47' (12" RCP NNW)

42. RIM=859.28' (WATER #42)
60" CONCRETE STRUCTURE
TOP OF BELL=852.38' (DIP E/W)
UNABLE TO MEASURE SIZE OF PIPE

SITE GRADING NOTES:

A. EXISTING CONDITIONS AND TOPOGRAPHY SHOWN REPRESENTS SITE CONDITIONS PER THE PLAT OF SURVEY LAST DATED 6-16-2004, PREPARED BY ENGINEERING RESOURCE ASSOCIATES INC. CONTRACTOR SHALL FIELD VERIFY EXISTING ELEVATIONS AND CONDITIONS (INCLUDING BUT NOT LIMITED TO VERIFICATION OF CONTROL AND ALL UTILITIES WHETHER DEPICTED OR NOT) PRIOR TO CONSTRUCTION AND NOTIFY ENGINEER OF ANY DISCREPANCIES.

A.A. ADDITIONAL EXISTING TOPOGRAPHY AND UTILITY DATA SHOWN REPRESENTS SITE CONDITIONS MEASURED BY WT LAND SURVEYING INC. ON 7-24-19.

B. ALL PROPOSED GRADES ARE GIVEN TO FINISHED GRADE, I.E. TOP OF PROPOSED ASPHALT, CONCRETE, TOP OF PROPOSED CURB, ETC. SEE DETAILS FOR PAVEMENT THICKNESS.

C. CONTRACTOR SHALL CONTACT J.U.L.I.E. (811 OR 1-800-892-0123) AND PRIVATE LOCATING SERVICE TO LOCATE ALL UNDERGROUND UTILITY LINES PRIOR TO STARTING ANY DEMOLITION AND/OR EXCAVATION. EXACT LOCATIONS OF ANY EXISTING ELECTRIC, GAS, TELEPHONE, ETC. LINES ARE UNKNOWN.

D. CONTRACTOR SHALL ENSURE POSITIVE SITE DRAINAGE AT THE END OF EACH WORKING DAY DURING CONSTRUCTION OPERATIONS. FAILURE TO PROVIDE ADEQUATE DRAINAGE WILL PRECLUDE THE CONTRACTOR FROM ANY POSSIBLE COMPENSATION REQUESTED DUE TO DELAYS OR UNSUITABLE MATERIALS CREATED AS A RESULT.

E. CONTRACTOR SHALL RESTORE ALL DISTURBED AREAS OUTSIDE OF CONSTRUCTION LIMITS TO ORIGINAL CONDITION OR BETTER.

F. CONTRACTOR SHALL REPAIR AT HIS EXPENSE ANY DAMAGE TO EXISTING ASPHALT, CONCRETE, CURBS, SIDEWALKS, ETC. RESULTING FROM CONSTRUCTION TRAFFIC AND/OR OPERATIONS. REPAIRS SHALL BE MADE TO THE SATISFACTION OF THE OWNER AND/OR ENGINEER.

G. CONTRACTOR TO UTILIZE CARE WHEN WORKING NEAR EXISTING UTILITIES TO REMAIN. ANY DAMAGE TO EXISTING UTILITIES NOT NOTED TO BE REMOVED SHALL BE REPAIRED AT CONTRACTOR'S EXPENSE TO THE SATISFACTION OF THE OWNER AND/OR ENGINEER.

H. ALL EXISTING TREES SHOWN ARE TO REMAIN UNLESS OTHERWISE NOTED.

I. ALL HANDICAP ACCESSIBLE ROUTES (SIDEWALKS, WALKWAYS, PAVEMENTS, ETC.) SHALL MAINTAIN A MAXIMUM CROSS SLOPE OF 2.00% AND A MAXIMUM LONGITUDINAL SLOPE OF 5.00%. ACCESSIBLE PARKING STALLS SHALL MAINTAIN A MAXIMUM SLOPE OF 2.00% IN ALL DIRECTIONS.

J. VOIDS LEFT BY ANY ITEM REMOVED UNDER ANY PROPOSED BUILDING, PAVEMENT, OR WALK OR WITHIN 24" THEREOF SHALL BE BACKFILLED WITH ENGINEERED FILL ACCORDING TO THE GEOTECHNICAL REPORT.

K. ALL FIRE ACCESS LANES WITHIN THE PROJECT AREA SHALL REMAIN IN SERVICE, CLEAN OF DEBRIS, AND ACCESSIBLE FOR USE BY EMERGENCY VEHICLES.

L. CONSTRUCTION ACCESS POINTS TO THE SITE SHALL BE PROTECTED IN SUCH A WAY AS TO PREVENT TRACKING OF MUD OR SOIL ONTO PUBLIC THOROUGHFARES. ALL SEDIMENT SPILLED, DROPPED, WASHED OR TRACKED ONTO PUBLIC RIGHTS-OF-WAY MUST BE REMOVED IMMEDIATELY BY THE CONTRACTOR.

M. ALL EXISTING SUBGRADE TO BE SCARIFIED (DISKED) TO A DEPTH OF 12" AND RE-COMPACTED, AND THEN TESTED USING A DYNAMIC CONE PENETROMETER. SEE GEOTECHNICAL REPORT FOR ADDITIONAL REQUIREMENTS.

N. ALL EXCESS SOILS THAT CANNOT BE USED AS SUITABLE FILL SHALL BE HAULED FROM THE SITE AND LEGALLY DISPOSED OF.

O. CONTRACTOR TO PROVIDE SOIL TESTING SERVICES FOR COMPLETION OF THE ILLINOIS ENVIRONMENTAL PROTECTION AGENCY'S LPC-662 AND/OR LPC-663 FORMS AS PART OF THEIR CONTRACT.

P. PREPARE SUBGRADE AS SPECIFIED WITHIN THE GEOTECHNICAL REPORT DATED JULY 23, 2019 PREPARED BY ILLINOIS DRILLING & TESTING CO., INC.

Q. ALL TOPSOIL BENEATH PROPOSED STRUCTURES AND PAVEMENT SHALL BE REMOVED. REFER TO THE GEOTECHNICAL REPORT DATED JULY 23, 2019 PREPARED BY ILLINOIS DRILLING & TESTING CO., INC FOR EXISTING TOPSOIL DEPTHS.

R. ALL INTERSECTIONS OR CHANGES IN DIRECTION ON HANDICAP ACCESSIBLE ROUTES (SIDEWALKS, WALKWAYS, PAVEMENTS, ETC.) SHALL MAINTAIN A MAXIMUM SLOPE OF 2.00% IN ALL DIRECTIONS.

S. THE CONTRACTOR SHALL PLAN TO HAUL UP TO 600 CUBIC YARDS OF CLEAN TOPSOIL TO THE PARK DISTRICT MAINTENANCE FACILITY LOCATED AT 1450 POPLAR CREEK DRIVE IN HOFFMAN ESTATES, IL. ADD #1

NORTH

1" = 30'

00 15 30 60 120

AQUATIC \ CIVIL \ MECHANICAL \ ELECTRICAL \ PLUMBING \ TELECOMMUNICATION \ STRUCTURAL \ ACCESSIBILITY CONSULTING \ DESIGN & PROGRAM MANAGEMENT \ LAND SURVEY

WT GROUP
Engineering with Precision, Pace and Passion.
2675 Pratum Avenue | Hoffman Estates, IL 60192
T: 224.293.0503 F: 224.293.0444
wtengineering.com
IL License No: 184.007570-0015 Expires: 04.30.2021
© COPYRIGHT 2019 THE W-T GROUP, LLC

WT Group
Engineering • Design • Consulting

SOUTH RIDGE COMMUNITY PARK
ENHANCEMENT PLAN 2019
1450 FREEMAN ROAD
HOFFMAN ESTATES, IL 60192

heparks
making life fun

ISSUE

TO	DATE
MWRD	9/17/19
MWRD	10/22/19
VILLAGE	11/25/19
MWRD	1/2/20
SWCD	1/17/20
FOR BID	1/23/20
ADD #1	2/03/20

CHECK: CMS

DRAWN: PS

1911354C

C-5.1
SITE GRADING PLAN

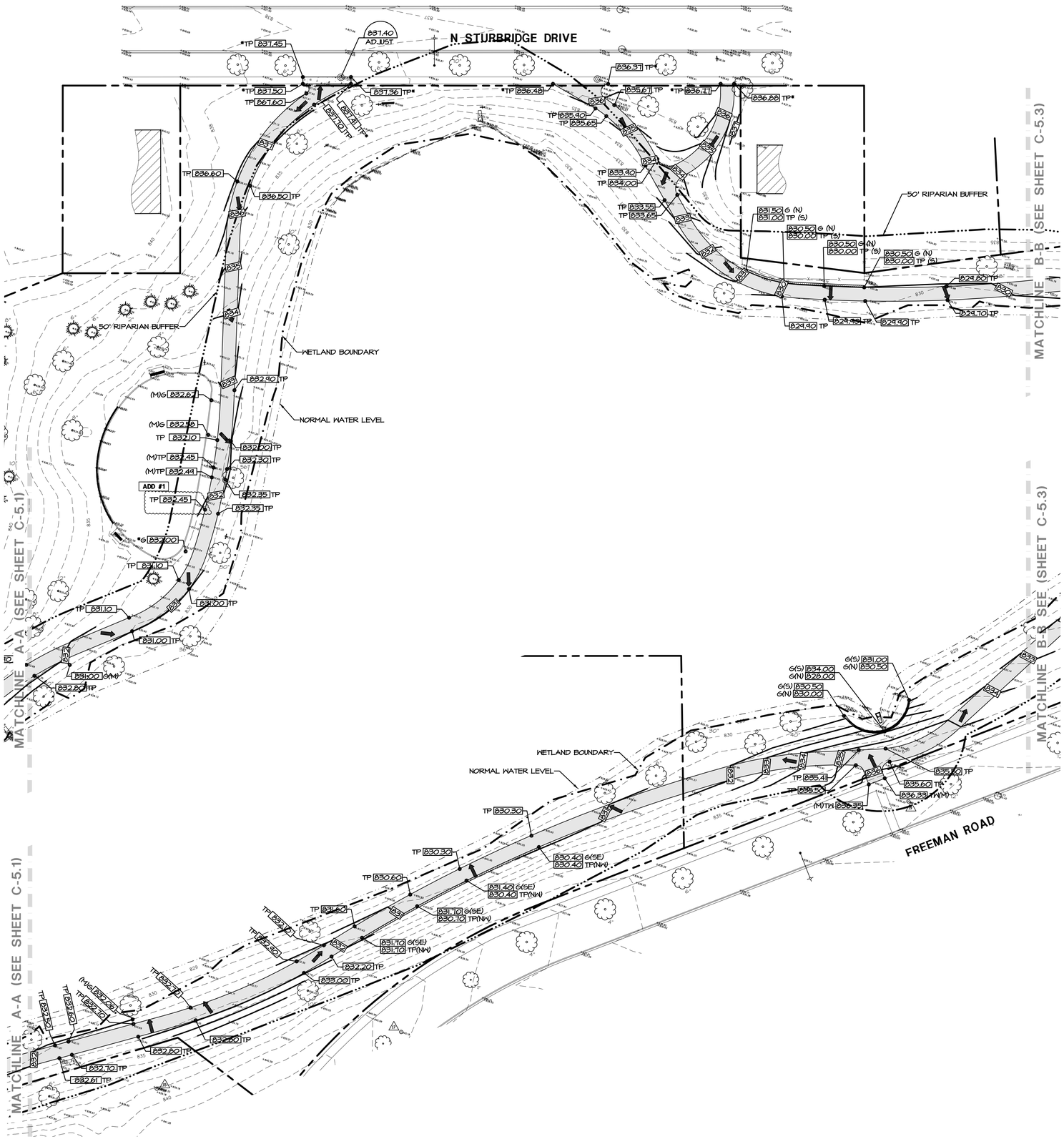

GRADING LEGEND

- EXISTING SPOT GRADE
- PROPOSED SPOT GRADE
- PROPOSED RIM ELEVATION
- EXISTING CONTOUR LINE
- PROPOSED CONTOUR LINE
- OVERLAND FLOW ARROW
- 100 YEAR OVERLAND FLOW ROUTE
- EMERGENCY OVERFLOW ARROW
- TP — TOP OF PAVEMENT ELEVATION
- TW — TOP OF SIDEWALK ELEVATION
- G — FINISHED GRADE ELEVATION
- FF — FINISHED FLOOR ELEVATION
- TC — TOP OF CURB ELEVATION
- FL — FLOW LINE ELEVATION
- ADJUST — ADJUST EXISTING RIM ELEVATION
- GB — GRADE BREAK
- (M) — MATCH EXISTING ELEVATION
- INTERPOLATED SPOT GRADE
- EXISTING MANHOLE
- EXISTING WATER STRUCTURE
- EXISTING FIRE HYDRANT
- EXISTING B-BOX
- EXISTING FLARED END SECTION
- PROPOSED FIRE HYDRANT
- PROPOSED VALVE WITH VAULT
- PROPOSED B-BOX
- PROPOSED INLET
- PROPOSED CATCH BASIN
- PROPOSED CLOSED LID MANHOLE
- NORMAL WATER LEVEL
- WETLAND BOUNDARY
- 50' RIPARIAN BUFFER

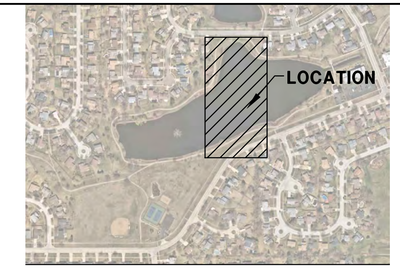

KEYMAP

SCALE: N.T.S.

NORTH

HATCH LEGEND

- NEW ASPHALT TRAIL — 2" HMA SURFACE COURSE, 8" CA-6 BASE COURSE
- NEW ROADWAY PAVEMENT TO MATCH EXISTING CROSS SECTION
- NEW 5" CONCRETE SIDEWALK — 5" PORTLAND CEMENT CONCRETE, 4" CA-6 BASE COURSE
- NEW 6" CONCRETE PAVEMENT — 6" PORTLAND CEMENT CONCRETE, 4" CA-6 BASE COURSE
- NEW ASPHALT PAVEMENT — 1-3/4" HMA SURFACE COURSE, 2-1/4" HMA BINDER COURSE, 10" CA-6 BASE COURSE
- NEW 1-3/4" ASPHALT MILL & OVERLAY — SEE DETAIL
- NEW CONCRETE SPLASH PAD

EXISTING UTILITY DATA

15 — RIM=839.68' (SANITARY #15)
48" CONCRETE STRUCTURE
INV=833.08' (8" CLAY W)

17 — RIM=840.09' (STORM #17)
48" CONCRETE STRUCTURE
INV=832.72' (15" RCP NE)
INV=832.81' (12" RCP SSE)
INV=833.92' (15" RCP S)

19 — RIM=836.08' (STORM #19)
60" CONCRETE STRUCTURE
INV=828.19' (15" RCP SW/ENE)
INV=828.19' (18" RCP SE/S)
INV=828.19' (24" RCP N)

27 — RIM=839.39' (STORM #27)
24" CONCRETE STRUCTURE
INV=835.91' (15" RCP N)
INV=836.01' (12" RCP SSE)

SITE GRADING NOTES:

A. EXISTING CONDITIONS AND TOPOGRAPHY SHOWN REPRESENTS SITE CONDITIONS PER THE PLAT OF SURVEY LAST DATED 6-16-2009, PREPARED BY ENGINEERING RESOURCE ASSOCIATES INC. CONTRACTOR SHALL FIELD VERIFY EXISTING ELEVATIONS AND CONDITIONS (INCLUDING BUT NOT LIMITED TO VERIFICATION OF CONTROL AND ALL UTILITIES WHETHER DEPICTED OR NOT) PRIOR TO CONSTRUCTION AND NOTIFY ENGINEER OF ANY DISCREPANCIES.

A.A. ADDITIONAL EXISTING TOPOGRAPHY AND UTILITY DATA SHOWN REPRESENTS SITE CONDITIONS MEASURED BY KT LAND SURVEYING INC. ON 7-24-19.

B. ALL PROPOSED GRADES ARE GIVEN TO FINISHED GRADE, I.E. TOP OF PROPOSED ASPHALT, CONCRETE, TOP OF PROPOSED CURB, ETC. SEE DETAILS FOR PAVEMENT THICKNESS.

C. CONTRACTOR SHALL CONTACT J.U.L.I.E. (811 OR 1-800-892-0123) AND PRIVATE LOCATING SERVICE TO LOCATE ALL UNDERGROUND UTILITY LINES PRIOR TO STARTING ANY DEMOLITION AND/OR EXCAVATION. EXACT LOCATIONS OF ANY EXISTING ELECTRIC, GAS, TELEPHONE, ETC. LINES ARE UNKNOWN.

D. CONTRACTOR SHALL ENSURE POSITIVE SITE DRAINAGE AT THE END OF EACH WORKING DAY DURING CONSTRUCTION OPERATIONS. FAILURE TO PROVIDE ADEQUATE DRAINAGE WILL PRECLUDE THE CONTRACTOR FROM ANY POSSIBLE COMPENSATION REQUESTED DUE TO DELAYS OR UNSUITABLE MATERIALS CREATED AS A RESULT.

E. CONTRACTOR SHALL RESTORE ALL DISTURBED AREAS OUTSIDE OF CONSTRUCTION LIMITS TO ORIGINAL CONDITION OR BETTER.

F. CONTRACTOR SHALL REPAIR AT HIS EXPENSE ANY DAMAGE TO EXISTING ASPHALT, CONCRETE, CURBS, SIDEWALKS, ETC. RESULTING FROM CONSTRUCTION TRAFFIC AND/OR OPERATIONS. REPAIRS SHALL BE MADE TO THE SATISFACTION OF THE OWNER AND/OR ENGINEER.

G. CONTRACTOR TO UTILIZE CARE WHEN WORKING NEAR EXISTING UTILITIES TO REMAIN. ANY DAMAGE TO EXISTING UTILITIES NOT NOTED TO BE REMOVED SHALL BE REPAIRED AT CONTRACTOR'S EXPENSE TO THE SATISFACTION OF THE OWNER AND/OR ENGINEER.

H. ALL EXISTING TREES SHOWN ARE TO REMAIN UNLESS OTHERWISE NOTED.

I. ALL HANDICAP ACCESSIBLE ROUTES (SIDEWALKS, WALKWAYS, PAVEMENTS, ETC.) SHALL MAINTAIN A MAXIMUM CROSS SLOPE OF 2.00% AND A MAXIMUM LONGITUDINAL SLOPE OF 5.00%. ACCESSIBLE PARKING STALLS SHALL MAINTAIN A MAXIMUM SLOPE OF 2.00% IN ALL DIRECTIONS.

J. VOIDS LEFT BY ANY ITEM REMOVED UNDER ANY PROPOSED BUILDING, PAVEMENT, OR WALK OR WITHIN 24" THEREOF SHALL BE BACKFILLED WITH ENGINEERED FILL ACCORDING TO THE GEOTECHNICAL REPORT.

K. ALL FIRE ACCESS LANES WITHIN THE PROJECT AREA SHALL REMAIN IN SERVICE, CLEAN OF DEBRIS, AND ACCESSIBLE FOR USE BY EMERGENCY VEHICLES.

L. CONSTRUCTION ACCESS POINTS TO THE SITE SHALL BE PROTECTED IN SUCH A WAY AS TO PREVENT TRACKING OF MUD OR SOIL ONTO PUBLIC THOROUGHFARES. ALL SEDIMENT SPILLED, DROPPED, WASHED OR TRACKED ONTO PUBLIC RIGHTS-OF-WAY MUST BE REMOVED IMMEDIATELY BY THE CONTRACTOR.

M. ALL EXISTING SUBGRADE TO BE SCARIFIED (DISKED) TO A DEPTH OF 12" AND RE-COMPACTED, AND THEN TESTED USING A DYNAMIC CONE PENETROMETER. SEE GEOTECHNICAL REPORT FOR ADDITIONAL REQUIREMENTS.

N. ALL EXCESS SOILS THAT CANNOT BE USED AS SUITABLE FILL SHALL BE HAULED FROM THE SITE AND LEGALLY DISPOSED OF.

O. CONTRACTOR TO PROVIDE SOIL TESTING SERVICES FOR COMPLETION OF THE ILLINOIS ENVIRONMENTAL PROTECTION AGENCY'S LPC-662 AND/OR LPC-663 FORMS AS PART OF THEIR CONTRACT.

P. PREPARE SUBGRADE AS SPECIFIED WITHIN THE GEOTECHNICAL REPORT DATED JULY 23, 2019 PREPARED BY ILLINOIS DRILLING & TESTING CO., INC.

Q. ALL TOPSOIL BENEATH PROPOSED STRUCTURES AND PAVEMENT SHALL BE REMOVED. REFER TO THE GEOTECHNICAL REPORT DATED JULY 23, 2019 PREPARED BY ILLINOIS DRILLING & TESTING CO., INC FOR EXISTING TOPSOIL DEPTHS.

R. ALL INTERSECTIONS OR CHANGES IN DIRECTION ON HANDICAP ACCESSIBLE ROUTES (SIDEWALKS, WALKWAYS, PAVEMENTS, ETC.) SHALL MAINTAIN A MAXIMUM SLOPE OF 2.00% IN ALL DIRECTIONS.

S. THE CONTRACTOR SHALL PLAN TO HAUL UP TO 600 CUBIC YARDS OF CLEAN TOPSOIL TO THE PARK DISTRICT MAINTENANCE FACILITY LOCATED AT 1450 POPLAR CREEK DRIVE IN HOFFMAN ESTATES, IL.

ADD #1

NORTH

1" = 30'

00 15 30 60 120

AQUATIC \ CIVIL \ MECHANICAL \ ELECTRICAL \ PLUMBING \ TELECOMMUNICATION \ STRUCTURAL \ ACCESSIBILITY CONSULTING \ DESIGN & PROGRAM MANAGEMENT \ LAND SURVEY

WT GROUP
Engineering with Precision. Place and Passion.
2675 Pratum Avenue | Hoffman Estates, IL 60192
T: 224.293.0303 F: 224.293.0444
wtengineering.com
IL License No: 184.007570-0015 Expires: 04.30.2021

© COPYRIGHT 2019 THE W-T GROUP, LLC

WT Group
Engineering • Design • Consulting

SOUTH RIDGE COMMUNITY PARK
ENHANCEMENT PLAN 2019
1450 FREEMAN ROAD
HOFFMAN ESTATES, IL 60192

heparks
making life fun

ISSUE

TO	DATE
MWRD	9/17/19
MWRD	10/22/19
VILLAGE	11/25/19
MWRD	1/2/20
SWCD	1/17/20
FOR BID	1/23/20
ADD #1	2/03/20

CHECK: CMS
DRAWN: PS
1911354C

C-5.2
SITE GRADING PLAN

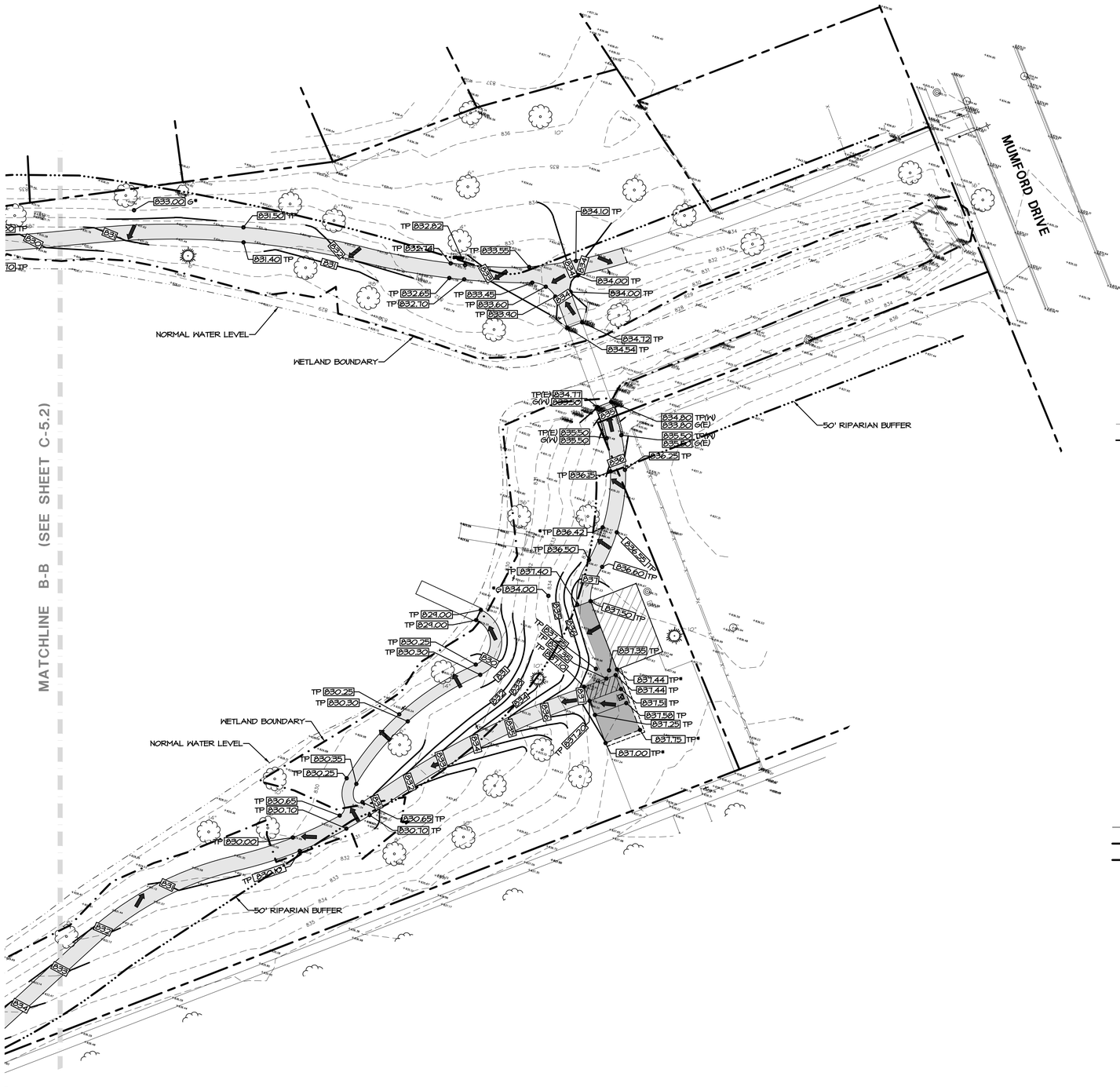

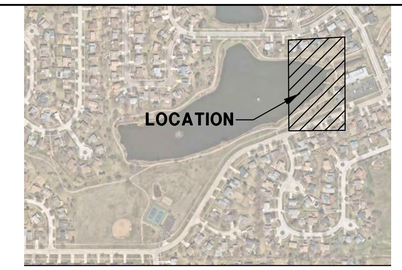

KEYMAP

SCALE: N.T.S.

NORTH

HATCH LEGEND

- NEW ASPHALT TRAIL — 2" HMA SURFACE COURSE, 8" CA-6 BASE COURSE
- NEW ROADWAY PAVEMENT TO MATCH EXISTING CROSS SECTION
- NEW 5" CONCRETE SIDEWALK — 5" PORTLAND CEMENT CONCRETE, 4" CA-6 BASE COURSE
- NEW 6" CONCRETE PAVEMENT — 6" PORTLAND CEMENT CONCRETE, 4" CA-6 BASE COURSE
- NEW ASPHALT PAVEMENT — 1-3/4" HMA SURFACE COURSE, 2-1/4" HMA BINDER COURSE, 10" CA-6 BASE COURSE
- NEW 1-3/4" ASPHALT MILL & OVERLAY — SEE DETAIL
- NEW CONCRETE SPLASH PAD

GRADING LEGEND

+000.00	EXISTING SPOT GRADE
000.00	PROPOSED SPOT GRADE
000.00	PROPOSED RIM ELEVATION
000	EXISTING CONTOUR LINE
000	PROPOSED CONTOUR LINE
	OVERLAND FLOW ARROW
	100 YEAR OVERLAND FLOW ROUTE
	EMERGENCY OVERFLOW ARROW
TP	TOP OF PAVEMENT ELEVATION
TW	TOP OF SIDEWALK ELEVATION
G	FINISHED GRADE ELEVATION
FF	FINISHED FLOOR ELEVATION
TC	TOP OF CURB ELEVATION
FL	FLOW LINE ELEVATION
ADJUST	ADJUST EXISTING RIM ELEVATION
GB	GRADE BREAK
(M)	MATCH EXISTING ELEVATION
•	INTERPOLATED SPOT GRADE
	EXISTING MANHOLE
	EXISTING WATER STRUCTURE
	EXISTING FIRE HYDRANT
	EXISTING B-BOX
	EXISTING FLARED END SECTION
	PROPOSED FIRE HYDRANT
	PROPOSED VALVE WITH VAULT
	PROPOSED B-BOX
	PROPOSED INLET
	PROPOSED CATCH BASIN
	PROPOSED CLOSED LID MANHOLE
	NORMAL WATER LEVEL
	WETLAND BOUNDARY
	50' RIPARIAN BUFFER

SITE GRADING NOTES:

A. EXISTING CONDITIONS AND TOPOGRAPHY SHOWN REPRESENTS SITE CONDITIONS PER THE PLAT OF SURVEY LAST DATED 6-16-2004, PREPARED BY ENGINEERING RESOURCE ASSOCIATES INC. CONTRACTOR SHALL FIELD VERIFY EXISTING ELEVATIONS AND CONDITIONS (INCLUDING BUT NOT LIMITED TO VERIFICATION OF CONTROL AND ALL UTILITIES WHETHER DEPICTED OR NOT) PRIOR TO CONSTRUCTION AND NOTIFY ENGINEER OF ANY DISCREPANCIES.

A.A. ADDITIONAL EXISTING TOPOGRAPHY AND UTILITY DATA SHOWN REPRESENTS SITE CONDITIONS MEASURED BY WT LAND SURVEYING INC. ON 7-24-19.

B. ALL PROPOSED GRADES ARE GIVEN TO FINISHED GRADE, I.E. TOP OF PROPOSED ASPHALT, CONCRETE, TOP OF PROPOSED CURB, ETC. SEE DETAILS FOR PAVEMENT THICKNESS.

C. CONTRACTOR SHALL CONTACT J.U.L.I.E. (811 OR 1-800-892-0123) AND PRIVATE LOCATING SERVICE TO LOCATE ALL UNDERGROUND UTILITY LINES PRIOR TO STARTING ANY DEMOLITION AND/OR EXCAVATION. EXACT LOCATIONS OF ANY EXISTING ELECTRIC, GAS, TELEPHONE, ETC. LINES ARE UNKNOWN.

D. CONTRACTOR SHALL ENSURE POSITIVE SITE DRAINAGE AT THE END OF EACH WORKING DAY DURING CONSTRUCTION OPERATIONS. FAILURE TO PROVIDE ADEQUATE DRAINAGE WILL PRECLUDE THE CONTRACTOR FROM ANY POSSIBLE COMPENSATION REQUESTED DUE TO DELAYS OR UNSUITABLE MATERIALS CREATED AS A RESULT.

E. CONTRACTOR SHALL RESTORE ALL DISTURBED AREAS OUTSIDE OF CONSTRUCTION LIMITS TO ORIGINAL CONDITION OR BETTER.

F. CONTRACTOR SHALL REPAIR AT HIS EXPENSE ANY DAMAGE TO EXISTING ASPHALT, CONCRETE, CURBS, SIDEWALKS, ETC. RESULTING FROM CONSTRUCTION TRAFFIC AND/OR OPERATIONS. REPAIRS SHALL BE MADE TO THE SATISFACTION OF THE OWNER AND/OR ENGINEER.

G. CONTRACTOR TO UTILIZE CARE WHEN WORKING NEAR EXISTING UTILITIES TO REMAIN. ANY DAMAGE TO EXISTING UTILITIES NOT NOTED TO BE REMOVED SHALL BE REPAIRED AT CONTRACTOR'S EXPENSE TO THE SATISFACTION OF THE OWNER AND/OR ENGINEER.

H. ALL EXISTING TREES SHOWN ARE TO REMAIN UNLESS OTHERWISE NOTED.

I. ALL HANDICAP ACCESSIBLE ROUTES (SIDEWALKS, WALKWAYS, PAVEMENTS, ETC.) SHALL MAINTAIN A MAXIMUM CROSS SLOPE OF 2.00% AND A MAXIMUM LONGITUDINAL SLOPE OF 5.00%. ACCESSIBLE PARKING STALLS SHALL MAINTAIN A MAXIMUM SLOPE OF 2.00% IN ALL DIRECTIONS.

J. VOIDS LEFT BY ANY ITEM REMOVED UNDER ANY PROPOSED BUILDING, PAVEMENT, OR WALK OR WITHIN 24" THEREOF SHALL BE BACKFILLED WITH ENGINEERED FILL ACCORDING TO THE GEOTECHNICAL REPORT.

K. ALL FIRE ACCESS LANES WITHIN THE PROJECT AREA SHALL REMAIN IN SERVICE, CLEAN OF DEBRIS, AND ACCESSIBLE FOR USE BY EMERGENCY VEHICLES.

L. CONSTRUCTION ACCESS POINTS TO THE SITE SHALL BE PROTECTED IN SUCH A WAY AS TO PREVENT TRACKING OF MUD OR SOIL ONTO PUBLIC THOROUGHFARES. ALL SEDIMENT SPILLED, DROPPED, WASHED OR TRACKED ONTO PUBLIC RIGHTS-OF-WAY MUST BE REMOVED IMMEDIATELY BY THE CONTRACTOR.

M. ALL EXISTING SUBGRADE TO BE SCARIFIED (DISKED) TO A DEPTH OF 12" AND RE-COMPACTED, AND THEN TESTED USING A DYNAMIC CONE PENETROMETER. SEE GEOTECHNICAL REPORT FOR ADDITIONAL REQUIREMENTS.

N. ALL EXCESS SOILS THAT CANNOT BE USED AS SUITABLE FILL SHALL BE HAULED FROM THE SITE AND LEGALLY DISPOSED OF.

O. CONTRACTOR TO PROVIDE SOIL TESTING SERVICES FOR COMPLETION OF THE ILLINOIS ENVIRONMENTAL PROTECTION AGENCY'S LPC-662 AND/OR LPC-663 FORMS AS PART OF THEIR CONTRACT.

P. PREPARE SUBGRADE AS SPECIFIED WITHIN THE GEOTECHNICAL REPORT DATED JULY 23, 2019 PREPARED BY ILLINOIS DRILLING & TESTING CO., INC.

Q. ALL TOPSOIL BENEATH PROPOSED STRUCTURES AND PAVEMENT SHALL BE REMOVED. REFER TO THE GEOTECHNICAL REPORT DATED JULY 23, 2019 PREPARED BY ILLINOIS DRILLING & TESTING CO., INC FOR EXISTING TOPSOIL DEPTHS.

R. ALL INTERSECTIONS OR CHANGES IN DIRECTION ON HANDICAP ACCESSIBLE ROUTES (SIDEWALKS, WALKWAYS, PAVEMENTS, ETC.) SHALL MAINTAIN A MAXIMUM SLOPE OF 2.00% IN ALL DIRECTIONS.

S. THE CONTRACTOR SHALL PLAN TO HAUL UP TO 600 CUBIC YARDS OF CLEAN TOPSOIL TO THE PARK DISTRICT MAINTENANCE FACILITY LOCATED AT 1450 POPLAR CREEK DRIVE IN HOFFMAN ESTATES, IL.

ADD #1

NORTH

1" = 30'

00 15 30 60 120

AQUATIC \ CIVIL \ MECHANICAL \ ELECTRICAL \ PLUMBING \ TELECOMMUNICATION \ STRUCTURAL \ ACCESSIBILITY CONSULTING \ DESIGN & PROGRAM MANAGEMENT \ LAND SURVEY

WT GROUP
Engineering with Precision, Place and Passion.
2675 Pratum Avenue | Hoffman Estates, IL 60192
T: 224.293.0303 F: 224.293.0444
wtengineering.com
IL License No: 184.007570-0015 Expires: 04.30.2021
© COPYRIGHT 2019 THE W-T GROUP, LLC

WT Group
Engineering • Design • Consulting

SOUTH RIDGE COMMUNITY PARK
ENHANCEMENT PLAN 2019
1450 FREEMAN ROAD
HOFFMAN ESTATES, IL 60192

heparks
making life fun

ISSUE

TO	DATE
MWRD	9/17/19
MWRD	10/22/19
VILLAGE	11/25/19
MWRD	1/2/20
SWCD	1/17/20
FOR BID	1/23/20
ADD #1	2/03/20

CHECK: CMS

DRAWN: PS

1911354C

C-5.3
SITE GRADING PLAN

GRADING LEGEND

+000.00	EXISTING SPOT GRADE	(M)	MATCH EXISTING ELEVATION
000.00	PROPOSED SPOT GRADE	•	INTERPOLATED SPOT GRADE
000.00	PROPOSED RIM ELEVATION		EXISTING MANHOLE
	EXISTING CONTOUR LINE		EXISTING WATER STRUCTURE
000	PROPOSED CONTOUR LINE		EXISTING FIRE HYDRANT
	OVERLAND FLOW ARROW		EXISTING B-BOX
	100 YEAR OVERLAND FLOW ROUTE		EXISTING FLARED END SECTION
	EMERGENCY OVERFLOW ARROW		PROPOSED FIRE HYDRANT
TP	TOP OF PAVEMENT ELEVATION		PROPOSED VALVE WITH VAULT
TW	TOP OF SIDEWALK ELEVATION		PROPOSED B-BOX
G	FINISHED GRADE ELEVATION		PROPOSED INLET
FF	FINISHED FLOOR ELEVATION		PROPOSED CATCH BASIN
TC	TOP OF CURB ELEVATION		PROPOSED CLOSED LID MANHOLE
FL	FLOW LINE ELEVATION		NORMAL WATER LEVEL
ADJUST	ADJUST EXISTING RIM ELEVATION		WETLAND BOUNDARY
GB	GRADE BREAK		50' RIPARIAN BUFFER

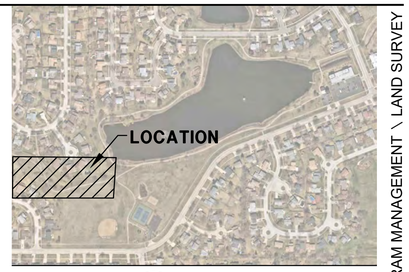

KEYMAP

SCALE: N.T.S.

NORTH

HATCH LEGEND

- NEW ASPHALT TRAIL — 2" HMA SURFACE COURSE, 8" CA-6 BASE COURSE
- NEW ROADWAY PAVEMENT TO MATCH EXISTING CROSS SECTION
- NEW 5" CONCRETE SIDEWALK — 5" PORTLAND CEMENT CONCRETE, 4" CA-6 BASE COURSE
- NEW 6" CONCRETE PAVEMENT — 6" PORTLAND CEMENT CONCRETE, 4" CA-6 BASE COURSE
- NEW ASPHALT PAVEMENT — 1-3/4" HMA SURFACE COURSE, 2-1/4" HMA BINDER COURSE, 10" CA-6 BASE COURSE
- NEW 1-3/4" ASPHALT MILL & OVERLAY — SEE DETAIL
- NEW CONCRETE SPLASH PAD

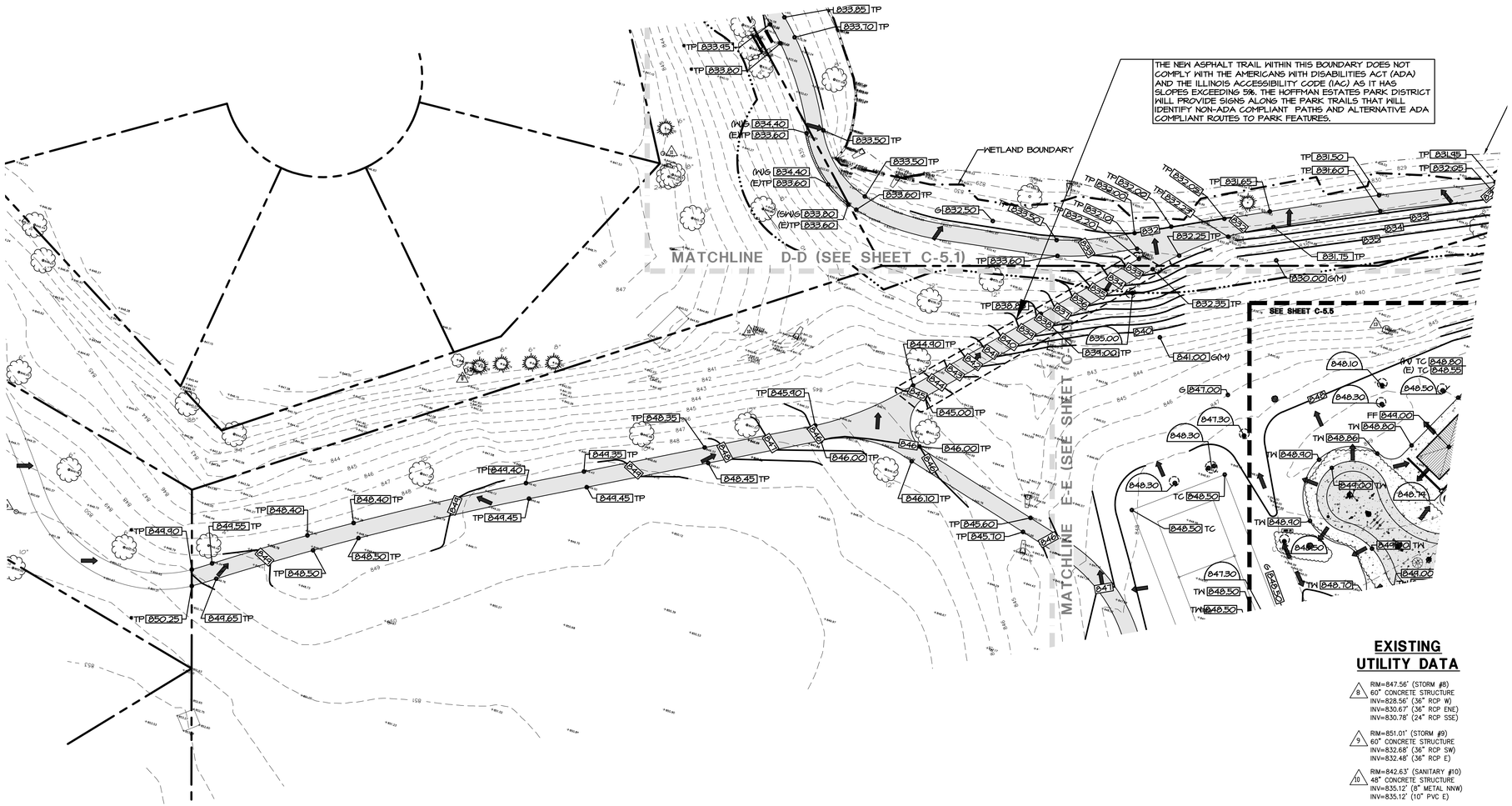

SITE GRADING NOTES:

A. EXISTING CONDITIONS AND TOPOGRAPHY SHOWN REPRESENTS SITE CONDITIONS PER THE PLAT OF SURVEY LAST DATED 6-16-2009, PREPARED BY ENGINEERING RESOURCE ASSOCIATES INC. CONTRACTOR SHALL FIELD VERIFY EXISTING ELEVATIONS AND CONDITIONS (INCLUDING BUT NOT LIMITED TO VERIFICATION OF CONTROL AND ALL UTILITIES WHETHER DEPICTED OR NOT) PRIOR TO CONSTRUCTION AND NOTIFY ENGINEER OF ANY DISCREPANCIES.

A.A. ADDITIONAL EXISTING TOPOGRAPHY AND UTILITY DATA SHOWN REPRESENTS SITE CONDITIONS MEASURED BY WT LAND SURVEYING INC. ON 7-24-19.

B. ALL PROPOSED GRADES ARE GIVEN TO FINISHED GRADE, I.E. TOP OF PROPOSED ASPHALT, CONCRETE, TOP OF PROPOSED CURB, ETC. SEE DETAILS FOR PAVEMENT THICKNESS.

C. CONTRACTOR SHALL CONTACT J.U.L.I.E. (811 OR 1-800-892-0123) AND PRIVATE LOCATING SERVICE TO LOCATE ALL UNDERGROUND UTILITY LINES PRIOR TO STARTING ANY DEMOLITION AND/OR EXCAVATION. EXACT LOCATIONS OF ANY EXISTING ELECTRIC, GAS, TELEPHONE, ETC. LINES ARE UNKNOWN.

D. CONTRACTOR SHALL ENSURE POSITIVE SITE DRAINAGE AT THE END OF EACH WORKING DAY DURING CONSTRUCTION OPERATIONS. FAILURE TO PROVIDE ADEQUATE DRAINAGE WILL PRECLUDE THE CONTRACTOR FROM ANY POSSIBLE COMPENSATION REQUESTED DUE TO DELAYS OR UNSUITABLE MATERIALS CREATED AS A RESULT.

E. CONTRACTOR SHALL RESTORE ALL DISTURBED AREAS OUTSIDE OF CONSTRUCTION LIMITS TO ORIGINAL CONDITION OR BETTER.

F. CONTRACTOR SHALL REPAIR AT HIS EXPENSE ANY DAMAGE TO EXISTING ASPHALT, CONCRETE, CURBS, SIDEWALKS, ETC. RESULTING FROM CONSTRUCTION TRAFFIC AND/OR OPERATIONS. REPAIRS SHALL BE MADE TO THE SATISFACTION OF THE OWNER AND/OR ENGINEER.

G. CONTRACTOR TO UTILIZE CARE WHEN WORKING NEAR EXISTING UTILITIES TO REMAIN. ANY DAMAGE TO EXISTING UTILITIES NOT NOTED TO BE REMOVED SHALL BE REPAIRED AT CONTRACTOR'S EXPENSE TO THE SATISFACTION OF THE OWNER AND/OR ENGINEER.

H. ALL EXISTING TREES SHOWN ARE TO REMAIN UNLESS OTHERWISE NOTED.

I. ALL HANDICAP ACCESSIBLE ROUTES (SIDEWALKS, WALKWAYS, PAVEMENTS, ETC.) SHALL MAINTAIN A MAXIMUM CROSS SLOPE OF 2.00% AND A MAXIMUM LONGITUDINAL SLOPE OF 5.00%. ACCESSIBLE PARKING STALLS SHALL MAINTAIN A MAXIMUM SLOPE OF 2.00% IN ALL DIRECTIONS.

J. VOIDS LEFT BY ANY ITEM REMOVED UNDER ANY PROPOSED BUILDING, PAVEMENT, OR WALK OR WITHIN 24" THEREOF SHALL BE BACKFILLED WITH ENGINEERED FILL ACCORDING TO THE GEOTECHNICAL REPORT.

K. ALL FIRE ACCESS LANES WITHIN THE PROJECT AREA SHALL REMAIN IN SERVICE, CLEAN OF DEBRIS, AND ACCESSIBLE FOR USE BY EMERGENCY VEHICLES.

L. CONSTRUCTION ACCESS POINTS TO THE SITE SHALL BE PROTECTED IN SUCH A WAY AS TO PREVENT TRACKING OF MUD OR SOIL ONTO PUBLIC THOROUGHFARES. ALL SEDIMENT SPILLED, DROPPED, WASHED OR TRACKED ONTO PUBLIC RIGHTS-OF-WAY MUST BE REMOVED IMMEDIATELY BY THE CONTRACTOR.

M. ALL EXISTING SUBGRADE TO BE SCARIFIED (DISKED) TO A DEPTH OF 12" AND RE-COMPACTED, AND THEN TESTED USING A DYNAMIC CONE PENETROMETER. SEE GEOTECHNICAL REPORT FOR ADDITIONAL REQUIREMENTS.

N. ALL EXCESS SOILS THAT CANNOT BE USED AS SUITABLE FILL SHALL BE HAULED FROM THE SITE AND LEGALLY DISPOSED OF.

O. CONTRACTOR TO PROVIDE SOIL TESTING SERVICES FOR COMPLETION OF THE ILLINOIS ENVIRONMENTAL PROTECTION AGENCY'S LPC-662 AND/OR LPC-663 FORMS AS PART OF THEIR CONTRACT.

P. PREPARE SUBGRADE AS SPECIFIED WITHIN THE GEOTECHNICAL REPORT DATED JULY 23, 2019 PREPARED BY ILLINOIS DRILLING & TESTING CO., INC.

Q. ALL TOPSOIL BENEATH PROPOSED STRUCTURES AND PAVEMENT SHALL BE REMOVED. REFER TO THE GEOTECHNICAL REPORT DATED JULY 23, 2019 PREPARED BY ILLINOIS DRILLING & TESTING CO., INC FOR EXISTING TOPSOIL DEPTHS.

R. ALL INTERSECTIONS OR CHANGES IN DIRECTION ON HANDICAP ACCESSIBLE ROUTES (SIDEWALKS, WALKWAYS, PAVEMENTS, ETC.) SHALL MAINTAIN A MAXIMUM SLOPE OF 2.00% IN ALL DIRECTIONS.

S. THE CONTRACTOR SHALL PLAN TO HAUL UP TO 600 CUBIC YARDS OF CLEAN TOPSOIL TO THE PARK DISTRICT MAINTENANCE FACILITY LOCATED AT 1450 POPLAR CREEK DRIVE IN HOFFMAN ESTATES, IL.

ADD #1

EXISTING UTILITY DATA

8 — RIM=847.56' (STORM #8)
60" CONCRETE STRUCTURE
INV=828.56' (36" RCP W)
INV=830.67' (36" RCP ENE)
INV=830.78' (24" RCP SSE)

9 — RIM=851.01' (STORM #9)
60" CONCRETE STRUCTURE
INV=832.68' (36" RCP SW)
INV=832.48' (36" RCP E)

10 — RIM=842.63' (SANITARY #10)
48" CONCRETE STRUCTURE
INV=835.12' (8" METAL NNW)
INV=835.12' (10" PVC E)

11 — RIM=845.96' (SANITARY #11)
48" CONCRETE STRUCTURE
INV=837.60' (8" METAL WNW/SSE)

13 — RIM=843.71' (SANITARY #13)
48" CONCRETE STRCUTURE
INV=833.91' (8" CLAY W/E)

NORTH

1" = 30'

00 15 30 60 120

AQUATIC \ CIVIL \ MECHANICAL \ ELECTRICAL \ PLUMBING \ TELECOMMUNICATION \ STRUCTURAL \ ACCESSIBILITY CONSULTING \ DESIGN & PROGRAM MANAGEMENT \ LAND SURVEY

WT GROUP
Engineering with Precision. Pace and Passion.
2675 Pratum Avenue | Hoffman Estates, IL 60192
T: 224.293.0051 F: 224.293.0444
wtengineering.com
IL License No: 184.007570-0015 Expires: 04.30.2021
© COPYRIGHT 2019 THE W-T GROUP, LLC

WT Group
Engineering • Design • Consulting

SOUTH RIDGE COMMUNITY PARK
ENHANCEMENT PLAN 2019
1450 FREEMAN ROAD
HOFFMAN ESTATES, IL 60192

heparks
making life fun

ISSUE

TO	DATE
MWRD	9/17/19
MWRD	10/22/19
VILLAGE	11/25/19
MWRD	1/2/20
SWCD	1/17/20
FOR BID	1/23/20
ADD #1	2/03/20

CHECK: CMS
DRAWN: PS
1911354C

C-5.4
SITE GRADING PLAN

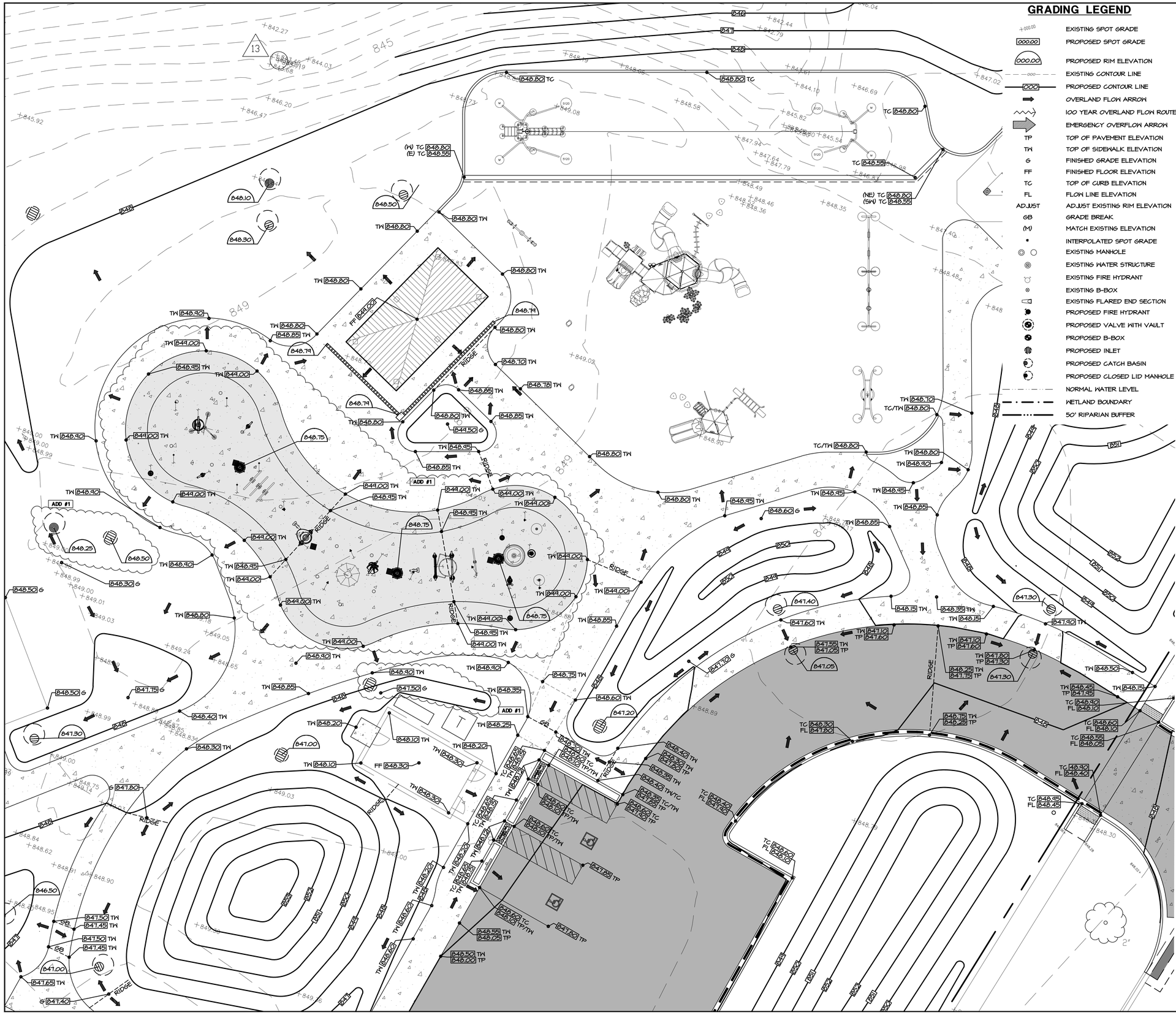

GRADING LEGEND

+000.00	EXISTING SPOT GRADE
000.00	PROPOSED SPOT GRADE
000.00	PROPOSED RIM ELEVATION
	EXISTING CONTOUR LINE
	PROPOSED CONTOUR LINE
	OVERLAND FLOW ARROW
	100 YEAR OVERLAND FLOW ROUTE
	EMERGENCY OVERFLOW ARROW
TP	TOP OF PAVEMENT ELEVATION
TW	TOP OF SIDEWALK ELEVATION
G	FINISHED GRADE ELEVATION
FF	FINISHED FLOOR ELEVATION
TC	TOP OF CURB ELEVATION
FL	FLOW LINE ELEVATION
ADJUST	ADJUST EXISTING RIM ELEVATION
GB	GRADE BREAK
(M)	MATCH EXISTING ELEVATION
•	INTERPOLATED SPOT GRADE
	EXISTING MANHOLE
	EXISTING WATER STRUCTURE
	EXISTING FIRE HYDRANT
	EXISTING B-BOX
	EXISTING FLARED END SECTION
	PROPOSED FIRE HYDRANT
	PROPOSED VALVE WITH VAULT
	PROPOSED B-BOX
	PROPOSED INLET
	PROPOSED CATCH BASIN
	PROPOSED CLOSED LID MANHOLE
	NORMAL WATER LEVEL
	WETLAND BOUNDARY
	50' RIPARIAN BUFFER

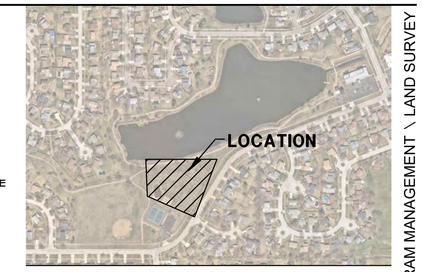

KEYMAP

SCALE: N.T.S.

NORTH

HATCH LEGEND

	NEW ASPHALT TRAIL 2" HMA SURFACE COURSE 8" CA-6 BASE COURSE
	NEW ROADWAY PAVEMENT TO MATCH EXISTING CROSS SECTION
	NEW 5" CONCRETE SIDEWALK 5" PORTLAND CEMENT CONCRETE 4" CA-6 BASE COURSE
	NEW 6" CONCRETE PAVEMENT 6" PORTLAND CEMENT CONCRETE 4" CA-6 BASE COURSE
	NEW ASPHALT PAVEMENT 1-3/4" HMA SURFACE COURSE 2-1/4" HMA BINDER COURSE 10" CA-6 BASE COURSE
	NEW 1-3/4" ASPHALT MILL & OVERLAY SEE DETAIL
	NEW CONCRETE SPLASH PAD

SITE GRADING NOTES:

A. EXISTING CONDITIONS AND TOPOGRAPHY SHOWN REPRESENTS SITE CONDITIONS PER THE PLAT OF SURVEY LAST DATED 6-16-2004, PREPARED BY ENGINEERING RESOURCE ASSOCIATES INC. CONTRACTOR SHALL FIELD VERIFY EXISTING ELEVATIONS AND CONDITIONS (INCLUDING BUT NOT LIMITED TO VERIFICATION OF CONTROL AND ALL UTILITIES WHETHER DEPICTED OR NOT) PRIOR TO CONSTRUCTION AND NOTIFY ENGINEER OF ANY DISCREPANCIES.

A.A. ADDITIONAL EXISTING TOPOGRAPHY AND UTILITY DATA SHOWN REPRESENTS SITE CONDITIONS MEASURED BY IVT LAND SURVEYING INC. ON 7-24-19.

B. ALL PROPOSED GRADES ARE GIVEN TO FINISHED GRADE, I.E. TOP OF PROPOSED ASPHALT, CONCRETE, TOP OF PROPOSED CURB, ETC. SEE DETAILS FOR PAVEMENT THICKNESS.

C. CONTRACTOR SHALL CONTACT J.U.L.I.E. (811 OR 1-800-892-0123) AND PRIVATE LOCATING SERVICE TO LOCATE ALL UNDERGROUND UTILITY LINES PRIOR TO STARTING ANY DEMOLITION AND/OR EXCAVATION. EXACT LOCATIONS OF ANY EXISTING ELECTRIC, GAS, TELEPHONE, ETC. LINES ARE UNKNOWN.

D. CONTRACTOR SHALL ENSURE POSITIVE SITE DRAINAGE AT THE END OF EACH WORKING DAY DURING CONSTRUCTION OPERATIONS. FAILURE TO PROVIDE ADEQUATE DRAINAGE WILL PRECLUDE THE CONTRACTOR FROM ANY POSSIBLE COMPENSATION REQUESTED DUE TO DELAYS OR UNSUITABLE MATERIALS CREATED AS A RESULT.

E. CONTRACTOR SHALL RESTORE ALL DISTURBED AREAS OUTSIDE OF CONSTRUCTION LIMITS TO ORIGINAL CONDITION OR BETTER.

F. CONTRACTOR SHALL REPAIR AT HIS EXPENSE ANY DAMAGE TO EXISTING ASPHALT, CONCRETE, CURBS, SIDEWALKS, ETC. RESULTING FROM CONSTRUCTION TRAFFIC AND/OR OPERATIONS. REPAIRS SHALL BE MADE TO THE SATISFACTION OF THE OWNER AND/OR ENGINEER.

G. CONTRACTOR TO UTILIZE CARE WHEN WORKING NEAR EXISTING UTILITIES TO REMAIN. ANY DAMAGE TO EXISTING UTILITIES NOT NOTED TO BE REMOVED SHALL BE REPAIRED AT CONTRACTOR'S EXPENSE TO THE SATISFACTION OF THE OWNER AND/OR ENGINEER.

H. ALL EXISTING TREES SHOWN ARE TO REMAIN UNLESS OTHERWISE NOTED.

I. ALL HANDICAP ACCESSIBLE ROUTES (SIDEWALKS, WALKWAYS, PAVEMENTS, ETC.) SHALL MAINTAIN A MAXIMUM CROSS SLOPE OF 2.00% AND A MAXIMUM LONGITUDINAL SLOPE OF 5.00%. ACCESSIBLE PARKING STALLS SHALL MAINTAIN A MAXIMUM SLOPE OF 2.00% IN ALL DIRECTIONS.

J. VOIDS LEFT BY ANY ITEM REMOVED UNDER ANY PROPOSED BUILDING, PAVEMENT, OR WALK OR WITHIN 24" THEREOF SHALL BE BACKFILLED WITH ENGINEERED FILL ACCORDING TO THE GEOTECHNICAL REPORT.

K. ALL FIRE ACCESS LANES WITHIN THE PROJECT AREA SHALL REMAIN IN SERVICE, CLEAN OF DEBRIS, AND ACCESSIBLE FOR USE BY EMERGENCY VEHICLES.

L. CONSTRUCTION ACCESS POINTS TO THE SITE SHALL BE PROTECTED IN SUCH A WAY AS TO PREVENT TRACKING OF MUD OR SOIL ONTO PUBLIC THOROUGHFARES. ALL SEDIMENT SPILLED, DROPPED, WASHED OR TRACKED ONTO PUBLIC RIGHTS-OF-WAY MUST BE REMOVED IMMEDIATELY BY THE CONTRACTOR.

M. ALL EXISTING SUBGRADE TO BE SCARIFIED (DISKED) TO A DEPTH OF 12" AND RE-COMPACTED, AND THEN TESTED USING A DYNAMIC CONE PENETROMETER. SEE GEOTECHNICAL REPORT FOR ADDITIONAL REQUIREMENTS.

N. ALL EXCESS SOILS THAT CANNOT BE USED AS SUITABLE FILL SHALL BE HAULED FROM THE SITE AND LEGALLY DISPOSED OF.

O. CONTRACTOR TO PROVIDE SOIL TESTING SERVICES FOR COMPLETION OF THE ILLINOIS ENVIRONMENTAL PROTECTION AGENCY'S LPC-662 AND/OR LPC-663 FORMS AS PART OF THEIR CONTRACT.

P. PREPARE SUBGRADE AS SPECIFIED WITHIN THE GEOTECHNICAL REPORT DATED JULY 23, 2019 PREPARED BY ILLINOIS DRILLING & TESTING CO., INC.

Q. ALL TOPSOIL BENEATH PROPOSED STRUCTURES AND PAVEMENT SHALL BE REMOVED. REFER TO THE GEOTECHNICAL REPORT DATED JULY 23, 2019 PREPARED BY ILLINOIS DRILLING & TESTING CO., INC FOR EXISTING TOPSOIL DEPTHS.

R. ALL INTERSECTIONS OR CHANGES IN DIRECTION ON HANDICAP ACCESSIBLE ROUTES (SIDEWALKS, WALKWAYS, PAVEMENTS, ETC.) SHALL MAINTAIN A MAXIMUM SLOPE OF 2.00% IN ALL DIRECTIONS.

S. THE CONTRACTOR SHALL PLAN TO HAUL UP TO 600 CUBIC YARDS OF CLEAN TOPSOIL TO THE PARK DISTRICT MAINTENANCE FACILITY LOCATED AT 1450 POPLAR CREEK DRIVE IN HOFFMAN ESTATES, IL.

ADD #1

NORTH

1" = 10'

00 5 10 20 40

AQUATIC \ CIVIL \ MECHANICAL \ ELECTRICAL \ PLUMBING \ TELECOMMUNICATION \ STRUCTURAL \ ACCESSIBILITY CONSULTING \ DESIGN & PROGRAM MANAGEMENT \ LAND SURVEY

WT GROUP
Engineering with Precision. Place and Passion.
2675 Pratum Avenue | Hoffman Estates, IL 60192
T: 224.293.0303 F: 224.293.0314
wtengineering.com
IL License No: 184.007570-0015 Expires: 04.30.2021

© COPYRIGHT 2019 THE W-T GROUP, LLC

WT Group
Engineering • Design • Consulting

SOUTH RIDGE COMMUNITY PARK
ENHANCEMENT PLAN 2019
1450 FREEMAN ROAD
HOFFMAN ESTATES, IL 60192

heparks
making life fun.

ISSUE

TO	DATE
MWRD	9/17/19
MWRD	10/22/19
VILLAGE	11/25/19
MWRD	1/2/20
SWCD	1/17/20
FOR BID	1/23/20
ADD #1	2/03/20

CHECK: CMS

DRAWN: PS

1911354C

C-5.5
SITE GRADING PLAN

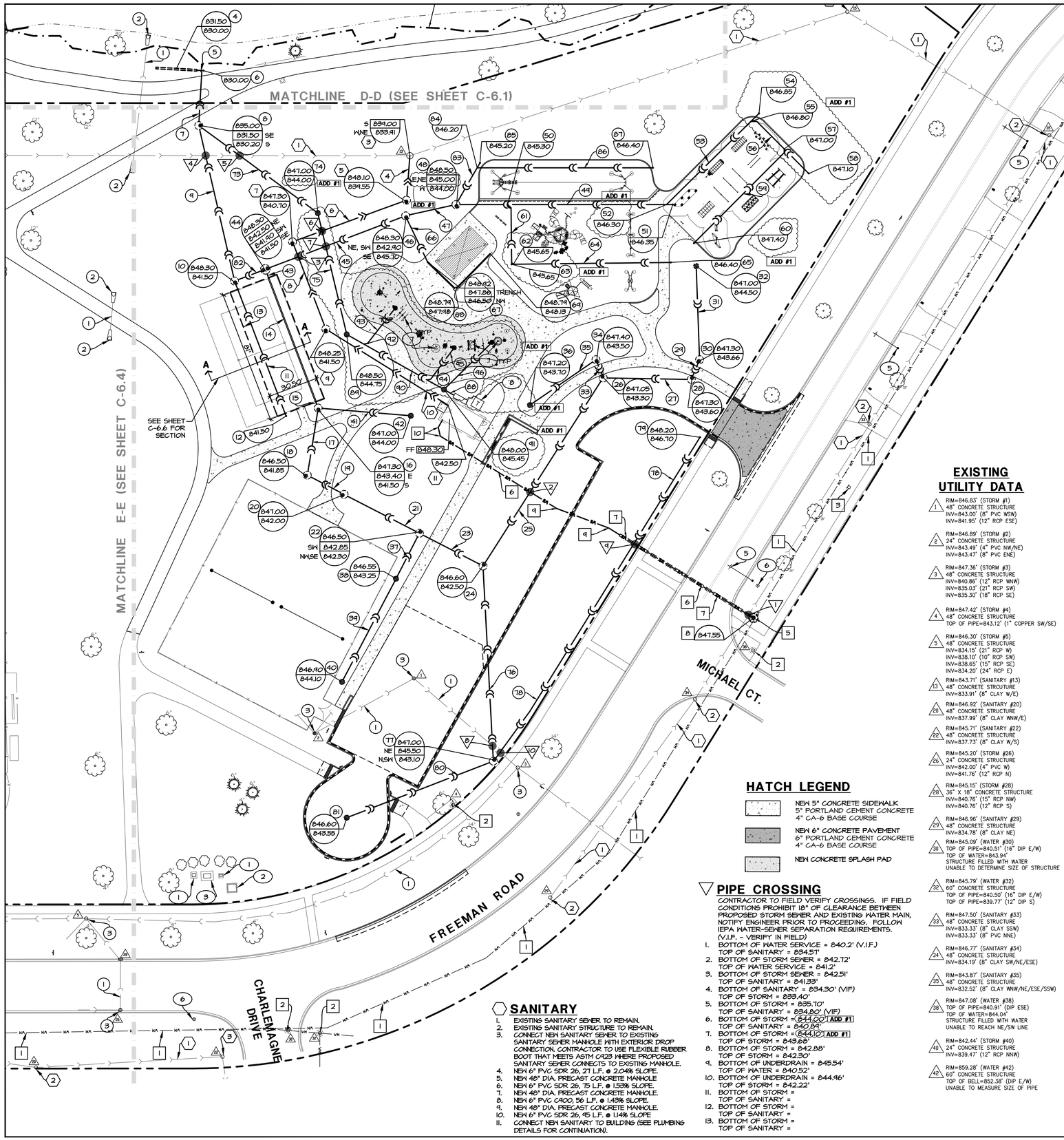

STORM SEWER

1. EXISTING STORM SEWER TO REMAIN.
2. EXISTING FLARED END SECTION TO REMAIN.
3. EXISTING STORM STRUCTURE TO REMAIN.
4. NEW 12" PERFORATED ADS SLOTTED DRAIN, 25 L.F.
5. NEW 12"X12" HDPE WYE FITTING.
6. NEW 6" CLEANOUT.
7. NEW 12" HDPE, 33 L.F. @ 0.60% SLOPE.
8. NEW 48" DIA. PRECAST CONCRETE CLOSED LID MANHOLE.
9. NEW 12" HDPE, 97 L.F. @ 11.8% SLOPE.
10. NEW 48" DIA. PRECAST CONCRETE MANHOLE WITH OPEN RIM.
11. NEW 4" PERFORATED HDPE, 107 L.F. @ 0% SLOPE.
12. NEW CLEANOUT
13. NEW GRAVEL INFILTRATION BASIN. (SEE SECTION A-A ON SHEET C-6.6).
14. NEW 18" PERFORATED HDPE LEVEL SPREADER, 88 L.F.
15. NEW 18" HDPE, 5 L.F. @ 0% SLOPE.
16. NEW 48" DIA. PRECAST CONCRETE CATCH BASIN WITH OPEN RIM.
17. NEW 15" RCP, 41 L.F. @ 0.85% SLOPE.
18. NEW 48" DIA. PRECAST CONCRETE MANHOLE WITH OPEN RIM.
19. NEW 15" RCP, 25 L.F. @ 0.60% SLOPE.
20. NEW 48" DIA. PRECAST CONCRETE MANHOLE WITH OPEN RIM.
21. NEW 15" PVC SDR 26, 52 L.F. @ 0.58% SLOPE.
22. NEW 48" DIA. PRECAST CONCRETE MANHOLE WITH OPEN RIM.
23. NEW 15" RCP, 44 L.F. @ 0.45% SLOPE.
24. NEW 48" DIA. PRECAST CONCRETE CATCH BASIN WITH OPEN RIM.
25. NEW 12" RCP, 136 L.F. @ 0.59% SLOPE.
26. NEW 48" DIA PRECAST CONCRETE MANHOLE WITH OPEN RIM.
27. NEW 12" RCP, 54 L.F. @ 0.56% SLOPE.
28. NEW 48" DIA. PRECAST CONCRETE MANHOLE WITH OPEN RIM.
29. NEW 12" RCP, 13 L.F. @ 0.46% SLOPE.
30. NEW 48" DIA. PRECAST CONCRETE MANHOLE WITH OPEN RIM.
31. NEW 8" HDPE, 57 L.F. @ 1.47% SLOPE.
32. NEW 24" DIA. CONCRETE INLET WITH OPEN RIM.
33. NEW 12" RCP, 12 L.F. @ 1.67% SLOPE.
34. NEW 48" DIA. PRECAST CONCRETE MANHOLE WITH OPEN RIM.
35. NEW 8" HDPE, 44 L.F. @ 1.43% SLOPE.
36. NEW 24" DIA. CONCRETE INLET WITH OPEN RIM.
37. NEW 8" PVC, 31 L.F. @ 1.28% SLOPE.
38. NEW 24" DIA. CONCRETE INLET WITH OPEN RIM.
39. NEW 8" PVC, 71 L.F. @ 1.20% SLOPE.
40. NEW 24" DIA. CONCRETE INLET WITH OPEN RIM.
41. NEW 12" RCP, 57 L.F. @ 1.10% SLOPE.
42. NEW 24" DIA. PRECAST CONCRETE MANHOLE WITH OPEN RIM.
43. NEW 18" HDPE, 5 L.F. @ 0% SLOPE.
44. NEW 72" DIA. PRECAST CONCRETE CATCH BASIN WITH OVERFLOW PIPE. (SEE DETAIL ON SHEET C-6.7)
45. NEW 12" HDPE, 92 L.F. @ 0.43% SLOPE.
46. NEW 48" DIA. PRECAST CONCRETE MANHOLE WITH OPEN RIM.
47. NEW 8" HDPE, 36 L.F. @ 3.00 % SLOPE.
48. NEW 48" DIA. PRECAST CONCRETE MANHOLE WITH OPEN RIM.
49. NEW 4" PERFORATED PVC SDR 26, 134 L.F. @ 1.00% SLOPE.
50. NEW 4"X4" WYE FITTING. ADD #1
51. NEW PLAYGROUND CLEANOUT.
52. NEW 4"X4" WYE FITTING. ADD #1
53. NEW 4" PERFORATED PVC SDR 26, 80 L.F. @ 0.63% SLOPE.
54. NEW PLAYGROUND CLEANOUT.
55. NEW 4"X4" WYE FITTING. ADD #1
56. NEW 4" PERFORATED PVC SDR 30, 48 L.F. @ 0.56% SLOP.
57. NEW 4"X4" WYE FITTING. ADD #1
58. NEW PLAYGROUND CLEANOUT.
59. NEW 4" PERFORATED PVC SDR 26, 80 L.F. @ 0.50% SLOPE. ADD #1
60. NEW PLAYGROUND CLEANOUT.
61. NEW 4" PERFORATED PVC SDR 26, 39 L.F. @ 0.84% SLOPE. ADD #1
62. NEW PLAYGROUND CLEANOUT.
63. NEW 4"X4" WYE FITTING. ADD #1
64. NEW 4" PERFORATED PVC SDR 26, 100 L.F. @ 0.75% SLOPE.
65. NEW PLAYGROUND CLEANOUT. ADD #1
66. NEW (4" PVC SDR 26) 31 L.F. @ 2.58% SLOPE.
67. NEW TYPE K100 ACO TRENCH DRAIN WITH 4" BOTTOM HUB OUTLET AND 45ID STAINLESS STEEL GRATE, 23 L.F. @ 0.50% SLOPE. INSTALL PER MANUFACTURERS SPECIFICATIONS.
68. NEW ACO K1-6216 CATCH BASIN LOAD CLASS E. INSTALL PER MANUFACTURERS SPECIFICATIONS.
69. NEW TYPE K100 ACO TRENCH DRAIN WITH 45ID STAINLESS STEEL GRATE, 30 L.F. @ 0.50% SLOPE. INSTALL PER MANUFACTURERS SPECIFICATIONS.
70. INSTALL SALVAGED FLARED END SECTION TO NEW 24" RCP.
71. NEW 24" RCP, 8 L.F. @ 0.40% SLOPE. CONNECT TO EXISTING 24" RCP WITH ALL FITTINGS REQUIRED. ADD #1
72. EXISTING OUTLET CONTROL STRUCTURE AND OVERFLOW WEIR.
73. NEW 6" PVC SDR 26, 90 L.F. @ 3.98% SLOPE.
74. NEW 24" DIA. PRECAST CONCRETE INLET WITH SOLID LID. ADD #1
75. NEW 8" PVC SDR 26, 75 L.F. @ 1% SLOPE.
76. NEW 12" RCP, 114 L.F. @ 0.50% SLOPE.
77. NEW 48" DIA. PRECAST CONCRETE MANHOLE WITH OPEN RIM.
78. NEW PERFORATED 6" HDPE UNDERDRAIN, 233 L.F. @ 0.52% SLOPE.
79. NEW 6" CLEANOUT.
80. NEW 12" RCP, 45 L.F. @ 0.47% SLOPE.
81. NEW 24" DIA. PRECAST CONCRETE INLET WITH OPEN RIM.
82. NEW 12" HDPE, 20 L.F. @ 2.00% SLOPE.
83. NEW 4" PERFORATED PVC SDR 26, 29 L.F. @ 0.69% SLOPE.
84. NEW 4"X4" WYE FITTING.
85. NEW 6" CLEANOUT. ADD #1
86. NEW 4" PERFORATED PVC SDR 26, 107 L.F. @ 1.22% SLOPE.
87. NEW 6" CLEANOUT. ADD #1
88. NEW 4" SCHEDULE 40 PIPE, 7 L.F. @ 2% MIN. SLOPE FOR SHUTDOWN PIT. PROVIDE GRATE ON TOP OF PIPE. ADD #1
89. NEW 24" DIA. PRECAST CONCRETE INLET WITH SOLID LID.
90. NEW 8" PVC SDR 26, 67 L.F. @ 1.04% SLOPE.
91. NEW 24" DIA. PRECAST CONCRETE INLET WITH SOLID LID.
92. NEW 8"x8" WYE CONNECTION.
93. NEW 8" PVC SDR 26, 24 L.F. @ 1% MIN. SLOPE. CONNECT UPSTREAM END TO NEW SPLASHPAD DRAIN.
94. NEW 8"x8" WYE CONNECTION.
95. NEW 8" PVC SDR 26, 25 L.F. @ 1% MIN. SLOPE. CONNECT UPSTREAM END TO NEW SPLASHPAD DRAIN.
96. NEW 8" PVC SDR 26, 45 L.F. @ 1% SLOPE CONNECT TO SPLASH PAD DRAIN.

EXISTING UTILITY DATA

1. RIM=846.83' (STORM #1)
48" CONCRETE STRUCTURE
INV=843.00' (8" PVC WSW)
INV=841.95' (12" RCP ESE)

2. RIM=846.89' (STORM #2)
24" CONCRETE STRUCTURE
INV=843.49' (4" PVC NW/NE)
INV=843.47' (8" PVC ENE)

3. RIM=847.36' (STORM #3)
48" CONCRETE STRUCTURE
INV=840.86' (12" RCP WNW)
INV=835.03' (21" RCP SW)
INV=835.30' (18" RCP SE)

4. RIM=847.42' (STORM #4)
48" CONCRETE STRUCTURE
TOP OF PIPE=843.12' (1" COPPER SW/SE)

5. RIM=846.30' (STORM #5)
48" CONCRETE STRUCTURE
INV=834.15' (21" RCP W)
INV=838.10' (10" RCP SW)
INV=838.65' (15" RCP SE)
INV=834.20' (24" RCP E)

13. RIM=843.71' (SANITARY #13)
48" CONCRETE STRCUTURE
INV=833.91' (8" CLAY W/E)

20. RIM=846.92' (SANITARY #20)
48" CONCRETE STRUCTURE
INV=837.99' (8" CLAY WNW/E)

22. RIM=845.71' (SANITARY #22)
48" CONCRETE STRUCTURE
INV=843.05' (8" CLAY W/S)

26. RIM=845.20' (STORM #26)
24" CONCRETE STRUCTURE
INV=842.00' (4" PVC W)
INV=841.76' (12" RCP N)

28. RIM=845.15' (STORM #28)
36" X 18" CONCRETE STRUCTURE
INV=840.76' (15" RCP NW)
INV=840.76' (12" RCP S)

29. RIM=846.96' (SANITARY #29)
48" CONCRETE STRUCTURE
INV=834.78' (8" CLAY NE)

30. RIM=845.09' (WATER #30)
TOP OF PIPE=840.51' (16" DIP E/W)
TOP OF WATER=843.94'
STRUCTURE FILLED WITH WATER
UNABLE TO DETERMINE SIZE OF STRUCTURE

32. RIM=845.79' (WATER #32)
60" CONCRETE STRUCTURE
TOP OF PIPE=840.50' (16" DIP E/W)
TOP OF PIPE=839.77' (12" DIP S)

33. RIM=847.50' (SANITARY #33)
48" CONCRETE STRUCTURE
INV=833.33' (8" CLAY SSW)
INV=833.33' (8" PVC NNE)

34. RIM=846.77' (SANITARY #34)
48" CONCRETE STRUCTURE
INV=834.19' (8" CLAY SW/NE/ESE)

35. RIM=843.87' (SANITARY #35)
48" CONCRETE STRUCTURE
INV=832.52' (8" CLAY WNW/NE/ESE/SSW)

38. RIM=847.08' (WATER #38)
TOP OF PIPE=840.91' (DIP ESE)
TOP OF WATER=844.04'
STRUCTURE FILLED WITH WATER
UNABLE TO REACH NE/SW LINE

40. RIM=842.44' (STORM #40)
24" CONCRETE STRUCTURE
INV=839.47' (12" RCP NNW)

42. RIM=859.28' (WATER #42)
60" CONCRETE STRUCTURE
TOP OF BELL=852.38' (DIP E/W)
UNABLE TO MEASURE SIZE OF PIPE

HATCH LEGEND

- NEW 5" CONCRETE SIDEWALK
  5" PORTLAND CEMENT CONCRETE
  4" CA-6 BASE COURSE
- NEW 6" CONCRETE PAVEMENT
  6" PORTLAND CEMENT CONCRETE
  4" CA-6 BASE COURSE
- NEW CONCRETE SPLASH PAD

PIPE CROSSING

CONTRACTOR TO FIELD VERIFY CROSSINGS. IF FIELD CONDITIONS PROHIBIT 18" OF CLEARANCE BETWEEN PROPOSED STORM SEWER AND EXISTING WATER MAIN, NOTIFY ENGINEER PRIOR TO PROCEEDING. FOLLOW IEPA WATER-SEWER SEPARATION REQUIREMENTS. (V.I.F. - VERIFY IN FIELD)

1. BOTTOM OF WATER SERVICE = 840.2' (V.I.F.)
   TOP OF SANITARY = 834.57'
2. BOTTOM OF STORM SEWER = 842.72'
   TOP OF WATER SERVICE = 841.2'
3. BOTTOM OF STORM SEWER = 842.51'
   TOP OF SANITARY = 841.33'
4. BOTTOM OF SANITARY = 834.30' (VIF)
   TOP OF STORM = 833.40'
5. BOTTOM OF STORM = 835.70'
   TOP OF SANITARY = 834.80' (VIF)
6. BOTTOM OF STORM = 844.00' ADD #1
   TOP OF SANITARY = 840.84'
7. BOTTOM OF STORM = 844.10' ADD #1
   TOP OF STORM = 843.68'
8. BOTTOM OF STORM = 842.88'
   TOP OF STORM = 842.30'
9. BOTTOM OF UNDERDRAIN = 845.54'
   TOP OF WATER = 840.52'
10. BOTTOM OF UNDERDRAIN = 844.96'
    TOP OF STORM = 842.22'
11. BOTTOM OF STORM =
    TOP OF SANITARY =
12. BOTTOM OF STORM =
    TOP OF SANITARY =
13. BOTTOM OF STORM =
    TOP OF SANITARY =

SANITARY

1. EXISTING SANITARY SEWER TO REMAIN.
2. EXISTING SANITARY STRUCTURE TO REMAIN.
3. CONNECT NEW SANITARY SEWER TO EXISTING SANITARY SEWER MANHOLE WITH EXTERIOR DROP CONNECTION. CONTRACTOR TO USE FLEXIBLE RUBBER BOOT THAT MEETS ASTM C923 WHERE PROPOSED SANITARY SEWER CONNECTS TO EXISTING MANHOLE.
4. NEW 6" PVC SDR 26, 27 L.F. @ 2.04% SLOPE.
5. NEW 48" DIA. PRECAST CONCRETE MANHOLE
6. NEW 6" PVC SDR 26, 75 L.F. @ 1.53% SLOPE.
7. NEW 48" DIA. PRECAST CONCRETE MANHOLE.
8. NEW 6" PVC D900, 56 L.F. @ 1.43% SLOPE.
9. NEW 48" DIA. PRECAST CONCRETE MANHOLE.
10. NEW 6" PVC SDR 26, 45 L.F. @ 1.14% SLOPE
11. CONNECT NEW SANITARY TO BUILDING (SEE PLUMBING DETAILS FOR CONTINUATION).

WATER

GENERAL WATER NOTES.
- ALL FITTINGS SHALL HAVE MECHANICAL JOINTS RESTRAINED BY MEGALUG GLANDS.
- CONTRACTOR SHALL COORDINATE WATER TAPS WITH THE VILLAGE PUBLIC WORKS DEPARTMENT PRIOR THE CONSTRUCTION.

1. EXISTING 16" WATER MAIN TO REMAIN.
2. EXISTING VALVE VAULT TO REMAIN.
3. EXISTING FIRE HYDRANT TO REMAIN.
4. EXISTING B-BOX TO REMAIN.
5. CONNECT NEW WATER SERVICE TO EXISTING WATER MAIN VIA PRESSURE CONNECTION WITH STAINLESS STEEL TAPPING SLEEVE PER VILLAGE REQUIREMENTS.
6. NEW 4" DIA. DIP CL52 WATER SERVICE, 231 L.F. (SEE PLUMBING PLANS FOR CONTINUATION).
7. NEW 12" DIAMETER STEEL CASING PIPE TO BE DIRECTIONALLY DRILLED/BORED/AUGURED AND PUSHED UNDERNEATH FREEMAN ROAD, 93 L.F.
8. NEW 60" DIA. PRECAST CONCRETE VALVE VAULT.
9. NEW 11.25 DEGREE DIP CL52 ELBOW.
10. NEW 45 DEGREE DIP CL52 ELBOW.

OTHER UTILITY

1. EXISTING ELECTRIC METER TO REMAIN.
2. EXISTING TRANSFORMER TO REMAIN.
3. EXISTING GENERATOR TO REMAIN.
4. EXISTING STREET LIGHT TO REMAIN.
5. EXISTING LIGHT TO REMAIN.
6. EXISTING TELCO PEDESTAL TO REMAIN. ADD #1
7. NEW SPLASH PAD EQUIPMENT TO BE PROVIDED BY THE OWNER AND INSTALLED BY THE CONTRACTOR. SEE SPLASH PAD PLANS, PREPARED BY VORTEX AQUATIC STRUCTURES INTERNATIONAL, FOR EQUIPMENT LAYOUT AND INSTALLATION SPECIFICATIONS. SEE MEP PLANS FOR WATER AND SEWER PIPING TO AND FROM SPLASH PAD.
8. NEW TRANSFORMER. (SEE MEP PLANS FOR DETAILS)

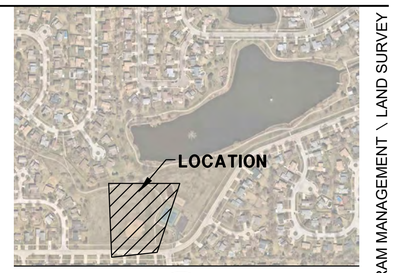

KEYMAP

SCALE: N.T.S.

NORTH

UTILITY LEGEND

- PROPOSED STORM SEWER
- PROPOSED SANITARY SEWER
- PROPOSED WATER SERVICE
- EXISTING SANITARY SEWER
- EXISTING WATER MAIN
- EXISTING STORM SEWER
- EXISTING MANHOLE
- EXISTING WATER STRUCTURE
- EXISTING B-BOX
- EXISTING STREET LIGHT
- EXISTING FIRE HYDRANT
- EXISTING UTILITY POLE
- EXISTING SIGN
- EXISTING FLARED END SECTION
- EXISTING TREE
- 000.00 PROPOSED RIM ELEVATION
- 000.00 PROPOSED INVERT ELEVATION
- FF FINISHED FLOOR ELEVATION
- ADJUST ADJUST EXISTING RIM ELEVATION
- PROPOSED FIRE HYDRANT
- PROPOSED VALVE WITH VAULT
- PROPOSED B-BOX
- PROPOSED INLET
- PROPOSED OPEN LID MANHOLE/CATCH BASIN
- PROPOSED CLOSED LID MANHOLE
- EXISTING TELCO PEDESTAL
- WETLAND BOUNDARY

SITE UTILITY NOTES:

A. CONTRACTOR SHALL CONTACT J.U.L.I.E. (811 OR 1-800-892-0123) AND PRIVATE LOCATING SERVICE TO LOCATE ALL UNDERGROUND UTILITY LINES PRIOR TO STARTING ANY DEMOLITION AND/OR EXCAVATION. EXACT LOCATIONS OF ANY EXISTING ELECTRIC, GAS, TELEPHONE, ETC. LINES ARE UNKNOWN.
B. CONTRACTOR TO UTILIZE CARE WHEN WORKING NEAR EXISTING UTILITIES TO REMAIN. ANY DAMAGE TO EXISTING UTILITIES NOT NOTED TO BE REMOVED SHALL BE REPAIRED AT THE CONTRACTOR'S EXPENSE AND TO THE SATISFACTION OF THE OWNER AND/OR ENGINEER.
C. CONTRACTOR SHALL EXCAVATE AND VERIFY IN FIELD ALL EXISTING UTILITY LOCATIONS, SIZES, CONDITIONS AND ELEVATIONS AT PROPOSED POINTS OF CONNECTION PRIOR TO ANY UNDERGROUND CONSTRUCTION. CONTRACTOR SHALL NOTIFY THE OWNER AND ENGINEER OF ANY DISCREPANCIES OR CONFLICTS PRIOR TO PROCEEDING WITH CONSTRUCTION.
D. REFER TO THE GENERAL NOTES AND SPECIFICATION SHEETS FOR ALL PIPE MATERIAL AND JOINT SPECIFICATIONS.
E. CONTRACTOR SHALL RESTORE ALL DISTURBED AREAS OUTSIDE OF CONSTRUCTION LIMITS TO ORIGINAL CONDITION OR BETTER.
F. CONTRACTOR SHALL VERIFY IN FIELD EXACT SIZE, MATERIAL, INVERT, PIPE ROUTING, AND SLOPE OF ALL EXISTING UTILITIES AND NOTIFY THE OWNER AND ENGINEER OF ANY DISCREPANCIES OR CONFLICTS PRIOR TO CONSTRUCTION.
G. THE CONTRACTOR IS RESPONSIBLE FOR THE STABILITY OF UTILITY TRENCHES DURING CONSTRUCTION AND SHALL PROVIDE TEMPORARY SHORING AND BRACING AS NECESSARY TO MAINTAIN STABILITY UNTIL CONSTRUCTION OF THE UTILITY IS COMPLETE IN ORDER TO MEET OSHA AND LOCAL CODES, AS WELL AS MANUFACTURER'S REQUIREMENTS.
H. ALL RCP STORM SEWER PIPE SHALL BE REINFORCED CONCRETE PIPE, CLASS IV, PER ASTM C-76 WITH FLEXIBLE (O-RING) GASKET JOINTS IN CONFORMANCE WITH ASTM C-443 AND SECTION 31-1.08 OF THE "STANDARD SPECIFICATIONS".
I. TRENCH BACKFILL MATERIAL SHALL BE PLACED AND COMPACTED TO A MINIMUM OF 95% MODIFIED PROCTOR DENSITY (ASTM D-1557) OVER ALL UNDERGROUND UTILITIES WHICH ARE CONSTRUCTED UNDER OR WITHIN 2 FEET OF ANY PROPOSED OR EXISTING PAVEMENT OR SIDEWALKS IN ACCORDANCE WITH THE STANDARD SPECIFICATIONS FOR ROAD AND BRIDGE CONSTRUCTION.
J. ADJUST RIM ELEVATIONS OF EXISTING STRUCTURES IN PAVEMENT AS NECESSARY TO MEET PROPOSED FINISHED GRADE.
K. CONTRACTOR TO COORDINATE ALL CONNECTIONS TO CITY UTILITIES AND STORM SEWERS WITH THE PUBLIC WORKS DEPARTMENT.
L. CONTRACTOR TO USE CAUTION WHEN EXCAVATING AT EXISTING UTILITY LINES.
M. ALL STORM MANHOLES SHALL HAVE OPEN LIDS UNLESS OTHERWISE SPECIFIED.
N. ALL EXISTING UTILITIES TO BE ABANDONED IN PLACE SHALL BE CAPPED WITH 2' LONG (MIN.) NON-SHRINK CONCRETE MORTAR PLUGS AT BOTH ENDS.
O. CONTRACTOR TO USE FLEXIBLE RUBBER BOOT THAT MEETS ASTM C923 WHERE PROPOSED SANITARY SEWER CONNECTS TO EXISTING MANHOLE.
P. PROVIDE RUBBER MISSION COUPLING OR SIMILAR CONNECTION BETWEEN PIPES OF DISSIMILAR SIZE OR MATERIAL.

NORTH

1" = 30'

00 15 30 60 120

WT GROUP
Engineering with Precision. Pace and Passion.
2675 Pratum Avenue | Hoffman Estates, IL 60192
T 847.695.9600 F 847.695.9720 847.298.0484
wtengineering.com
IL License No: 184.007570-0015 Expires: 04.30.2021

© COPYRIGHT 2019 THE W-T GROUP, LLC

AQUATIC \ CIVIL \ MECHANICAL \ ELECTRICAL \ PLUMBING \ TELECOMMUNICATION \ STRUCTURAL \ ACCESSIBILITY CONSULTING \ DESIGN & PROGRAM MANAGEMENT \ LAND SURVEY

SOUTH RIDGE COMMUNITY PARK
ENHANCEMENT PLAN 2019
1450 FREEMAN ROAD
HOFFMAN ESTATES, IL 60192

heparks
making life fun

ISSUE

TO	DATE
MWRD	9/17/19
MWRD	10/22/19
VILLAGE	11/25/19
MWRD	1/2/20
SWCD	1/17/20
FOR BID	1/23/20
ADD #1	2/03/20

CHECK: CMS

DRAWN: PS

1911354C

C-6.0
SITE UTILITY PLAN

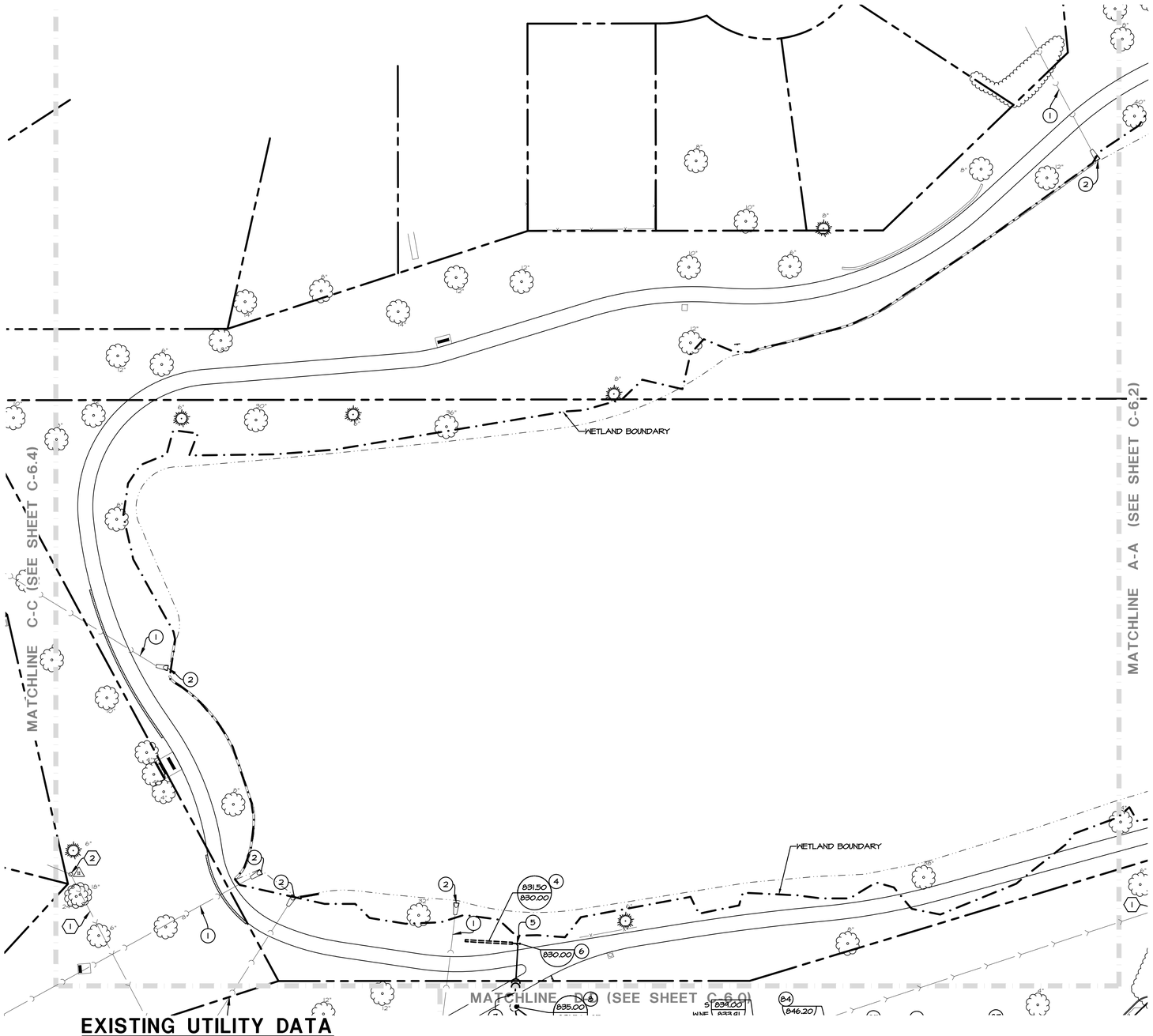

EXISTING UTILITY DATA

1. RIM=846.83' (STORM #1) 48" CONCRETE STRUCTURE INV=843.00' (8" PVC WSW) INV=841.95' (12" RCP ESE)
2. RIM=846.89' (STORM #2) 24" CONCRETE STRUCTURE INV=843.49' (4" PVC NW/NE) INV=843.47' (8" PVC ENE)
3. RIM=847.36' (STORM #3) 48" CONCRETE STRUCTURE INV=840.86' (12" RCP WNW) INV=835.03' (21" RCP SW) INV=835.30' (18" RCP SE)
4. RIM=847.42' (STORM #4) 48" CONCRETE STRUCTURE TOP OF PIPE=843.12' (1" COPPER SW/SE)
5. RIM=846.30' (STORM #5) 48" CONCRETE STRUCTURE INV=834.15' (21" RCP W) INV=838.10' (10" RCP SW) INV=838.65' (15" RCP SE) INV=834.20' (24" RCP E)
13. RIM=843.71' (SANITARY #13) 48" CONCRETE STRUCTURE INV=833.91' (8" CLAY W/E)
20. RIM=846.92' (SANITARY #20) 48" CONCRETE STRUCTURE INV=837.39' (8" CLAY WNW/E)
22. RIM=845.71' (SANITARY #22) 48" CONCRETE STRUCTURE INV=837.73' (8" CLAY W/S)
26. RIM=845.20' (STORM #26) 24" CONCRETE STRUCTURE INV=842.00' (4" PVC W) INV=841.76' (12" RCP N)
28. RIM=845.15' (STORM #28) 36" X 18" CONCRETE STRUCTURE INV=840.76' (15" RCP NW) INV=840.76' (12" RCP S)
29. RIM=846.96' (SANITARY #29) 48" CONCRETE STRUCTURE INV=834.78' (8" CLAY NE)
30. RIM=845.09' (WATER #30) TOP OF PIPE=840.51' (16" DIP E/W) TOP OF WATER=843.94' STRUCTURE FILLED WITH WATER UNABLE TO DETERMINE SIZE OF STRUCTURE
32. RIM=845.79' (WATER #32) 60" CONCRETE STRUCTURE TOP OF PIPE=840.50' (16" DIP E/W) TOP OF PIPE=839.77' (12" DIP S)
33. RIM=847.50' (SANITARY #33) 48" CONCRETE STRUCTURE INV=833.33' (8" CLAY SSW) INV=833.33' (8" PVC NNE)
34. RIM=846.77' (SANITARY #34) 48" CONCRETE STRUCTURE INV=834.19' (8" CLAY SW/NE/ESE)
35. RIM=843.87' (SANITARY #35) 48" CONCRETE STRUCTURE INV=832.52' (8" CLAY WNW/NE/ESE/SSW)
38. RIM=847.08' (WATER #38) TOP OF PIPE=840.91' (DIP ESE) TOP OF WATER=844.04' STRUCTURE FILLED WITH WATER UNABLE TO REACH NE/SW LINE
40. RIM=842.44' (STORM #40) 24" CONCRETE STRUCTURE INV=839.47' (12" RCP NNW)
42. RIM=859.28' (WATER #42) 60" CONCRETE STRUCTURE TOP OF BELL=852.38' (DIP E/W) UNABLE TO MEASURE SIZE OF PIPE

HATCH LEGEND

- NEW 5" CONCRETE SIDEWALK
  5" PORTLAND CEMENT CONCRETE
  4" CA-6 BASE COURSE
- NEW 6" CONCRETE PAVEMENT
  6" PORTLAND CEMENT CONCRETE
  4" CA-6 BASE COURSE
- NEW CONCRETE SPLASH PAD

SANITARY

1. EXISTING SANITARY SEWER TO REMAIN.
2. EXISTING SANITARY STRUCTURE TO REMAIN.
3. CONNECT NEW SANITARY SEWER TO EXISTING SANITARY SEWER MANHOLE WITH EXTERIOR DROP CONNECTION. CONTRACTOR TO USE FLEXIBLE RUBBER BOOT THAT MEETS ASTM C923 WHERE PROPOSED SANITARY SEWER CONNECTS TO EXISTING MANHOLE.
4. NEW 6" PVC SDR 26, 27 L.F. @ 2.04% SLOPE.
5. NEW 48" DIA. PRECAST CONCRETE MANHOLE
6. NEW 6" PVC SDR 26, 75 L.F. @ 1.53% SLOPE.
7. NEW 48" DIA. PRECAST CONCRETE MANHOLE.
8. NEW 6" PVC G900, 56 L.F. @ 1.43% SLOPE.
9. NEW 48" DIA. PRECAST CONCRETE MANHOLE.
10. NEW 6" PVC SDR 26, 95 L.F. @ 1.14% SLOPE
11. CONNECT NEW SANITARY TO BUILDING (SEE PLUMBING DETAILS FOR CONTINUATION).

PIPE CROSSING

CONTRACTOR TO FIELD VERIFY CROSSINGS. IF FIELD CONDITIONS PROHIBIT 18" OF CLEARANCE BETWEEN PROPOSED STORM SEWER AND EXISTING WATER MAIN, NOTIFY ENGINEER PRIOR TO PROCEEDING. FOLLOW IEPA WATER-SEWER SEPARATION REQUIREMENTS. (V.I.F. - VERIFY IN FIELD)

1. BOTTOM OF WATER SERVICE = 840.2' (V.I.F.)
   TOP OF SANITARY = 834.57'
2. BOTTOM OF STORM SEWER = 842.72'
   TOP OF WATER SERVICE = 841.2'
3. BOTTOM OF STORM SEWER = 842.51'
   TOP OF SANITARY = 841.33'
4. BOTTOM OF SANITARY = 834.30' (VIF)
   TOP OF STORM = 833.40'
5. BOTTOM OF STORM = 835.70'
   TOP OF SANITARY = 834.80' (VIF)
6. BOTTOM OF STORM = 844.00' ADD #1
   TOP OF SANITARY = 840.84'
7. BOTTOM OF STORM = 844.10' ADD #1
   TOP OF STORM = 843.68'
8. BOTTOM OF STORM = 842.88'
   TOP OF STORM = 842.30'
9. BOTTOM OF UNDERDRAIN = 845.54'
   TOP OF WATER = 840.52'
10. BOTTOM OF UNDERDRAIN = 844.96'
    TOP OF STORM = 842.22'
11. BOTTOM OF STORM =

STORM SEWER

1. EXISTING STORM SEWER TO REMAIN.
2. EXISTING FLARED END SECTION TO REMAIN.
3. EXISTING STORM STRUCTURE TO REMAIN.
4. NEW 12" PERFORATED ADS SLOTTED DRAIN, 25 L.F.
5. NEW 12"X12" HDPE WYE FITTING.
6. NEW 6" CLEANOUT.
7. NEW 12" HDPE, 33 L.F. @ 0.60% SLOPE.
8. NEW 48" DIA. PRECAST CONCRETE CLOSED LID MANHOLE.
9. NEW 12" HDPE, 97 L.F. @ 11.6% SLOPE.
10. NEW 48" DIA. PRECAST CONCRETE MANHOLE WITH OPEN RIM.
11. NEW 4" PERFORATED HDPE, 107 L.F. @ 0% SLOPE.
12. NEW CLEANOUT
13. NEW GRAVEL INFILTRATION BASIN. (SEE SECTION A-A ON SHEET C-6.6).
14. NEW 18" PERFORATED HDPE LEVEL SPREADER, 88 L.F.
15. NEW 18" HDPE, 5 L.F. @ 0% SLOPE.
16. NEW 48" DIA. PRECAST CONCRETE CATCH BASIN WITH OPEN RIM.
17. NEW 15" RCP, 41 L.F. @ 0.85% SLOPE.
18. NEW 48" DIA. PRECAST CONCRETE MANHOLE WITH OPEN RIM.
19. NEW 15" RCP, 25 L.F. @ 0.60% SLOPE.
20. NEW 48" DIA. PRECAST CONCRETE MANHOLE WITH OPEN RIM.
21. NEW 15" PVC SDR 26, 52 L.F. @ 0.58% SLOPE.
22. NEW 48" DIA. PRECAST CONCRETE MANHOLE WITH OPEN RIM.
23. NEW 15" RCP, 44 L.F. @ 0.45% SLOPE.
24. NEW 48" DIA. PRECAST CONCRETE CATCH BASIN WITH OPEN RIM.
25. NEW 12" RCP, 136 L.F. @ 0.54% SLOPE.
26. NEW 48" DIA PRECAST CONCRETE MANHOLE WITH OPEN RIM.
27. NEW 12" RCP, 54 L.F. @ 0.56% SLOPE.
28. NEW 48" DIA. PRECAST CONCRETE MANHOLE WITH OPEN RIM.
29. NEW 12" RCP, 13 L.F. @ 0.46% SLOPE.
30. NEW 48" DIA. PRECAST CONCRETE MANHOLE WITH OPEN RIM.
31. NEW 8" HDPE, 57 L.F. @ 1.47% SLOPE.
32. NEW 24" DIA. CONCRETE INLET WITH OPEN RIM.
33. NEW 12" RCP, 12 L.F. @ 1.67% SLOPE.
34. NEW 48" DIA. PRECAST CONCRETE MANHOLE WITH OPEN RIM.
35. NEW 8" HDPE, 49 L.F. @ 1.43% SLOPE.
36. NEW 24" DIA. CONCRETE INLET WITH OPEN RIM.
37. NEW 8" PVC, 31 L.F. @ 1.29% SLOPE.
38. NEW 24" DIA. CONCRETE INLET WITH OPEN RIM.
39. NEW 8" PVC, 71 L.F. @ 1.20% SLOPE.
40. NEW 24" DIA. CONCRETE INLET WITH OPEN RIM.
41. NEW 12" RCP, 57 L.F. @ 1.10% SLOPE.
42. NEW 24" DIA. PRECAST CONCRETE MANHOLE WITH OPEN RIM.
43. NEW 18" HDPE, 5 L.F. @ 0% SLOPE.
44. NEW 72" DIA. PRECAST CONCRETE CATCH BASIN WITH OVERFLOW PIPE. (SEE DETAIL ON SHEET C-6.7)
45. NEW 12" HDPE, 92 L.F. @ 0.43% SLOPE.
46. NEW 48" DIA. PRECAST CONCRETE MANHOLE WITH OPEN RIM.
47. NEW 8" HDPE, 36 L.F. @ 3.00 % SLOPE.
48. NEW 48" DIA. PRECAST CONCRETE MANHOLE WITH OPEN RIM.
49. NEW 4" PERFORATED PVC SDR 26, 134 L.F. @ 1.00% SLOPE. ADD #1
50. NEW 4"X4" WYE FITTING.
51. NEW PLAYGROUND CLEANOUT.
52. NEW 4"X4" WYE FITTING. ADD #1
53. NEW 4" PERFORATED PVC SDR 26, 80 L.F. @ 0.63% SLOPE.
54. NEW PLAYGROUND CLEANOUT.
55. NEW 4"X4" WYE FITTING. ADD #1
56. NEW 4" PERFORATED PVC SDR 30, 48 L.F. @ 0.56% SLOP.
57. NEW 4"X4" WYE FITTING.
58. NEW PLAYGROUND CLEANOUT. ADD #1
59. NEW 4" PERFORATED PVC SDR 26, 80 L.F. @ 0.50% SLOPE.
60. NEW PLAYGROUND CLEANOUT. ADD #1
61. NEW 4" PERFORATED PVC SDR 26, 34 L.F. @ 0.59% SLOPE.
62. NEW PLAYGROUND CLEANOUT.
63. NEW 4"X4" WYE FITTING. ADD #1
64. NEW 4" PERFORATED PVC SDR 26, 100 L.F. @ 0.75% SLOPE.
65. NEW PLAYGROUND CLEANOUT. ADD #1
66. NEW 4" PVC SDR 26, 31 L.F. @ 2.58% SLOPE.
67. NEW TYPE K100 ACO TRENCH DRAIN WITH 4" BOTTOM HUB OUTLET AND 45ID STAINLESS STEEL GRATE, 23 L.F. @ 0.50% SLOPE. INSTALL PER MANUFACTURERS SPECIFICATIONS.
68. NEW ACO K1-6216 CATCH BASIN LOAD CLASS E. INSTALL PER MANUFACTURERS SPECIFICATIONS.
69. NEW TYPE K100 ACO TRENCH DRAIN WITH 45ID STAINLESS STEEL GRATE, 30 L.F. @ 0.50% SLOPE. INSTALL PER MANUFACTURERS SPECIFICATIONS.
70. INSTALL SAWCUT FLARED END SECTION TO NEW 24" RCP.
71. NEW 24" RCP, 8 L.F. @ 0.40% SLOPE. CONNECT TO EXISTING 24" RCP WITH ALL FITTINGS REQUIRED. ADD #1
72. EXISTING OUTLET CONTROL STRUCTURE AND OVERFLOW WEIR.
73. NEW 6" PVC SDR 26, 90 L.F. @ 13.98% SLOPE.
74. NEW 24" DIA. PRECAST CONCRETE INLET WITH SOLID LID. ADD #1
75. NEW 8" PVC SDR 26, 75 L.F. @ 1% SLOPE.
76. NEW 12" RCP, 119 L.F. @ 0.50% SLOPE.
77. NEW 48" DIA. PRECAST CONCRETE MANHOLE WITH OPEN RIM.
78. NEW PERFORATED 6" HDPE UNDERDRAIN, 233 L.F. @ 0.52% SLOPE.
79. NEW 6" CLEANOUT.
80. NEW 12" RCP, 45 L.F. @ 0.47% SLOPE.
81. NEW 24" DIA. PRECAST CONCRETE INLET WITH OPEN RIM.
82. NEW 12" HDPE, 20 L.F. @ 2.00% SLOPE.
83. NEW 4" PERFORATED PVC SDR 26, 24 L.F. @ 0.69% SLOPE.
84. NEW 4"X4" WYE FITTING.
85. NEW 6" CLEANOUT. ADD #1
86. NEW 4" PERFORATED PVC SDR 26, 107 L.F. @ 1.02% SLOPE.
87. NEW 6" CLEANOUT. ADD #1
88. NEW 4" SCHEDULE 40 PIPE, 7 L.F. @ 2% MIN. SLOPE FOR SHUTDOWN PIT. PROVIDE GRATE ON TOP OF PIPE. ADD #1
89. NEW 24" DIA. PRECAST CONCRETE INLET WITH SOLID LID.
90. NEW 8" PVC SDR 26, 67 LF @ 1.04% SLOPE.
91. NEW 24" DIA. PRECAST CONCRETE INLET WITH SOLID LID.
92. NEW 8"x8" WYE CONNECTION.
93. NEW 8" PVC SDR 26, 29 LF @ 1% MIN. SLOPE. CONNECT UPSTREAM END TO NEW SPLASHPAD DRAIN.
94. NEW 8"x8" WYE CONNECTION.
95. NEW 8" PVC SDR 26, 25 LF @ 1% MIN. SLOPE. CONNECT UPSTREAM END TO NEW SPLASHPAD DRAIN.
96. NEW 8" PVC SDR 26, 45 L.F. @ 1% SLOPE CONNECT TO SPLASH PAD DRAIN.

OTHER UTILITY

1. EXISTING ELECTRIC METER TO REMAIN.
2. EXISTING TRANSFORMER TO REMAIN.
3. EXISTING GENERATOR TO REMAIN.
4. EXISTING STREET LIGHT TO REMAIN.
5. EXISTING LIGHT TO REMAIN.
6. EXISTING TELCO PEDESTAL TO REMAIN. ADD #1
7. NEW SPLASH PAD EQUIPMENT TO BE PROVIDED BY THE OWNER AND INSTALLED BY THE CONTRACTOR. SEE SPLASH PAD PLANS, PREPARED BY VORTEX AQUATIC STRUCTURES INTERNATIONAL, FOR EQUIPMENT LAYOUT AND INSTALLATION SPECIFICATIONS. SEE MEP PLANS FOR WATER AND SEWER PIPING TO AND FROM SPLASH PAD.
8. NEW TRANSFORMER. (SEE MEP PLANS FOR DETAILS)

WATER

GENERAL WATER NOTES:
- ALL FITTINGS SHALL HAVE MECHANICAL JOINTS RESTRAINED BY MEGALUG GLANDS.
- CONTRACTOR SHALL COORDINATE WATER TAPS WITH THE VILLAGE PUBLIC WORKS DEPARTMENT PRIOR THE CONSTRUCTION.

1. EXISTING 16" WATER MAIN TO REMAIN.
2. EXISTING VALVE VAULT TO REMAIN.
3. EXISTING FIRE HYDRANT TO REMAIN.
4. EXISTING B-BOX TO REMAIN.
5. CONNECT NEW WATER SERVICE TO EXISTING WATER MAIN VIA PRESSURE CONNECTION WITH STAINLESS STEEL TAPPING SLEEVE PER VILLAGE REQUIREMENTS.
6. NEW 4" DIA. DIP CL52 WATER SERVICE, 231 L.F. (SEE PLUMBING PLANS FOR CONTINUATION).
7. NEW 12" DIAMETER STEEL CASING PIPE TO BE DIRECTIONALLY DRILLED/BORED/AUGURED AND PUSHED UNDERNEATH FREEMAN ROAD, 93 L.F.
8. NEW 60" DIA. PRECAST CONCRETE VALVE VAULT.
9. NEW 11.25 DEGREE DIP CL52 ELBOW.
10. NEW 45 DEGREE DIP CL52 ELBOW.

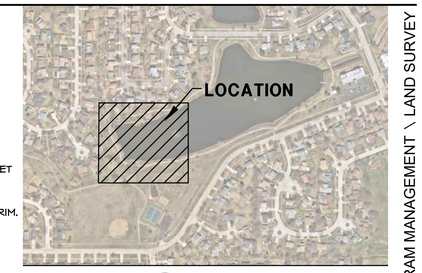

KEYMAP

SCALE: N.T.S.

NORTH

UTILITY LEGEND

- PROPOSED STORM SEWER
- PROPOSED SANITARY SEWER
- PROPOSED WATER SERVICE
- EXISTING SANITARY SEWER
- EXISTING WATER MAIN
- EXISTING STORM SEWER
- EXISTING MANHOLE
- EXISTING WATER STRUCTURE
- EXISTING B-BOX
- EXISTING STREET LIGHT
- EXISTING FIRE HYDRANT
- EXISTING UTILITY POLE
- EXISTING SIGN
- EXISTING FLARED END SECTION
- EXISTING TREE
- 000.00 PROPOSED RIM ELEVATION
- 000.00 PROPOSED INVERT ELEVATION
- FF FINISHED FLOOR ELEVATION
- ADJUST ADJUST EXISTING RIM ELEVATION
- PROPOSED FIRE HYDRANT
- PROPOSED VALVE WITH VAULT
- PROPOSED B-BOX
- PROPOSED INLET
- PROPOSED OPEN LID MANHOLE/CATCH BASIN
- PROPOSED CLOSED LID MANHOLE
- EXISTING TELCO PEDESTAL
- WETLAND BOUNDARY

SITE UTILITY NOTES:

A. CONTRACTOR SHALL CONTACT J.U.L.I.E. (811 OR 1-800-892-0123) AND PRIVATE LOCATING SERVICE TO LOCATE ALL UNDERGROUND UTILITY LINES PRIOR TO STARTING ANY DEMOLITION AND/OR EXCAVATION. EXACT LOCATIONS OF ANY EXISTING ELECTRIC, GAS, TELEPHONE, ETC. LINES ARE UNKNOWN.
B. CONTRACTOR TO UTILIZE CARE WHEN WORKING NEAR EXISTING UTILITIES TO REMAIN. ANY DAMAGE TO EXISTING UTILITIES NOT NOTED TO BE REMOVED SHALL BE REPAIRED AT THE CONTRACTOR'S EXPENSE AND TO THE SATISFACTION OF THE OWNER AND/OR ENGINEER.
C. CONTRACTOR SHALL EXCAVATE AND VERIFY IN FIELD ALL EXISTING UTILITY LOCATIONS, SIZES, CONDITIONS AND ELEVATIONS AT PROPOSED POINTS OF CONNECTION PRIOR TO ANY UNDERGROUND CONSTRUCTION. CONTRACTOR SHALL NOTIFY THE OWNER AND ENGINEER OF ANY DISCREPANCIES OR CONFLICTS PRIOR TO PROCEEDING WITH CONSTRUCTION.
D. REFER TO THE GENERAL NOTES AND SPECIFICATION SHEETS FOR ALL PIPE MATERIAL AND JOINT SPECIFICATIONS.
E. CONTRACTOR SHALL RESTORE ALL DISTURBED AREAS OUTSIDE OF CONSTRUCTION LIMITS TO ORIGINAL CONDITION OR BETTER.
F. CONTRACTOR SHALL VERIFY IN FIELD EXACT SIZE, MATERIAL, INVERT, PIPE ROUTING, AND SLOPE OF ALL EXISTING UTILITIES AND NOTIFY THE OWNER AND ENGINEER OF ANY DISCREPANCIES OR CONFLICTS PRIOR TO CONSTRUCTION.
G. THE CONTRACTOR IS RESPONSIBLE FOR THE STABILITY OF UTILITY TRENCHES DURING CONSTRUCTION AND SHALL PROVIDE TEMPORARY SHORING AND BRACING AS NECESSARY TO MAINTAIN STABILITY UNTIL CONSTRUCTION OF THE UTILITY IS COMPLETE IN ORDER TO MEET OSHA AND LOCAL CODES, AS WELL AS MANUFACTURER'S REQUIREMENTS.
H. ALL RCP STORM SEWER PIPE SHALL BE REINFORCED CONCRETE PIPE, CLASS IV, PER ASTM C-76 WITH FLEXIBLE (O-RING) GASKET JOINTS IN CONFORMANCE WITH ASTM C-443 AND SECTION 31-1.08 OF THE "STANDARD SPECIFICATIONS".
I. TRENCH BACKFILL MATERIAL SHALL BE PLACED AND COMPACTED TO A MINIMUM OF 95% MODIFIED PROCTOR DENSITY (ASTM D-1557) OVER ALL UNDERGROUND UTILITIES WHICH ARE CONSTRUCTED UNDER OR WITHIN 2 FEET OF ANY PROPOSED OR EXISTING PAVEMENT OR SIDEWALKS IN ACCORDANCE WITH THE STANDARD SPECIFICATIONS FOR ROAD AND BRIDGE CONSTRUCTION.
J. ADJUST RIM ELEVATIONS OF EXISTING STRUCTURES IN PAVEMENT AS NECESSARY TO MEET PROPOSED FINISHED GRADE.
K. CONTRACTOR TO COORDINATE ALL CONNECTIONS TO CITY UTILITIES AND STORM SEWERS WITH THE PUBLIC WORKS DEPARTMENT.
L. CONTRACTOR TO USE CAUTION WHEN EXCAVATING AT EXISTING UTILITY LINES.
M. ALL STORM MANHOLES SHALL HAVE OPEN LIDS UNLESS OTHERWISE SPECIFIED.
N. ALL EXISTING UTILITIES TO BE ABANDONED IN PLACE SHALL BE CAPPED WITH 2' LONG (MIN) NON-SHRINK CONCRETE MORTAR PLUGS AT BOTH ENDS.
O. CONTRACTOR TO USE FLEXIBLE RUBBER BOOT THAT MEETS ASTM C923 WHERE PROPOSED SANITARY SEWER CONNECTS TO EXISTING MANHOLE.
P. PROVIDE RUBBER MISSION COUPLING OR SIMILAR CONNECTION BETWEEN PIPES OF DISSIMILAR SIZE OR MATERIAL.

NORTH

1" = 30'

00 15 30 60 120

AQUATIC \ CIVIL \ MECHANICAL \ ELECTRICAL \ PLUMBING \ TELECOMMUNICATION \ STRUCTURAL \ ACCESSIBILITY CONSULTING \ DESIGN & PROGRAM MANAGEMENT \ LAND SURVEY

WT GROUP
Engineering with Precision. Pace and Passion.
2675 Pratum Avenue | Hoffman Estates, IL 60192
T: 224.293.0303 F: 224.293.0444
wtengineering.com
IL License No: 184.007570-0015 Expires: 04.30.2021

© COPYRIGHT 2019 THE W-T GROUP, LLC

WT Group
Engineering • Design • Consulting

heparks
making life fun

SOUTH RIDGE COMMUNITY PARK
ENHANCEMENT PLAN 2019
1450 FREEMAN ROAD
HOFFMAN ESTATES, IL 60192

ISSUE

TO	DATE
MWRD	9/17/19
MWRD	10/22/19
VILLAGE	11/25/19
MWRD	1/2/20
SWCD	1/17/20
FOR BID	1/23/20
ADD #1	2/03/20

CHECK: CMS

DRAWN: PS

1911354C

C-6.1
SITE UTILITY PLAN

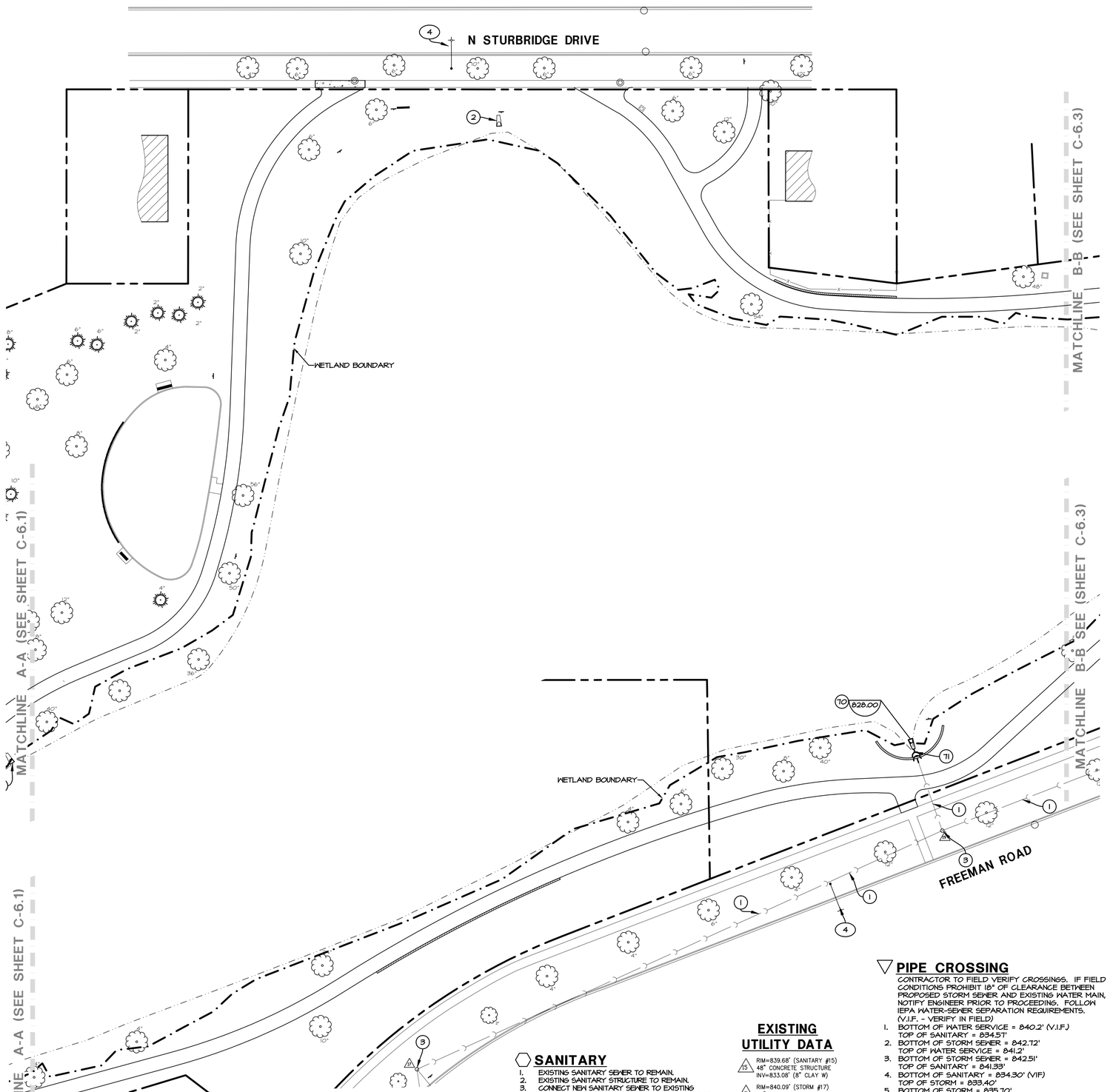

HATCH LEGEND

- NEW 5" CONCRETE SIDEWALK
  5" PORTLAND CEMENT CONCRETE
  4" CA-6 BASE COURSE
- NEW 6" CONCRETE PAVEMENT
  6" PORTLAND CEMENT CONCRETE
  4" CA-6 BASE COURSE
- NEW CONCRETE SPLASH PAD

SANITARY

1. EXISTING SANITARY SEWER TO REMAIN.
2. EXISTING SANITARY STRUCTURE TO REMAIN.
3. CONNECT NEW SANITARY SEWER TO EXISTING SANITARY SEWER MANHOLE WITH EXTERIOR DROP CONNECTION. CONTRACTOR TO USE FLEXIBLE RUBBER BOOT THAT MEETS ASTM C923 WHERE PROPOSED SANITARY SEWER CONNECTS TO EXISTING MANHOLE.
4. NEW 6" PVC SDR 26, 27 L.F. @ 2.04% SLOPE.
5. NEW 48" DIA. PRECAST CONCRETE MANHOLE
6. NEW 6" PVC SDR 26, 75 L.F. @ 1.53% SLOPE.
7. NEW 48" DIA. PRECAST CONCRETE MANHOLE.
8. NEW 6" PVC D900, 56 L.F. @ 1.43% SLOPE.
9. NEW 48" DIA. PRECAST CONCRETE MANHOLE.
10. NEW 6" PVC SDR 26, 95 L.F. @ 1.14% SLOPE
11. CONNECT NEW SANITARY TO BUILDING (SEE PLUMBING DETAILS FOR CONTINUATION).

EXISTING UTILITY DATA

15 — RIM=839.68' (SANITARY #15)
48" CONCRETE STRUCTURE
INV=833.08' (8" CLAY W)

17 — RIM=840.09' (STORM #17)
48" CONCRETE STRUCTURE
INV=832.72' (15" RCP NE)
INV=832.81' (12" RCP SSE)
INV=833.92' (15" RCP S)

19 — RIM=836.08' (STORM #19)
60" CONCRETE STRUCTURE
INV=828.19' (15" RCP SW/ENE)
INV=828.19' (18" RCP SE/S)
INV=828.19' (24" RCP N)

27 — RIM=839.39' (STORM #27)
24" CONCRETE STRUCTURE
INV=835.91' (15" RCP N)
INV=836.01' (12" RCP SSE)

PIPE CROSSING

CONTRACTOR TO FIELD VERIFY CROSSINGS. IF FIELD CONDITIONS PROHIBIT 18" OF CLEARANCE BETWEEN PROPOSED STORM SEWER AND EXISTING WATER MAIN, NOTIFY ENGINEER PRIOR TO PROCEEDING. FOLLOW IEPA WATER-SEWER SEPARATION REQUIREMENTS. (V.I.F. - VERIFY IN FIELD)

1. BOTTOM OF WATER SERVICE = 840.2' (V.I.F.)
   TOP OF SANITARY = 834.51'
2. BOTTOM OF STORM SEWER = 842.72'
   TOP OF WATER SERVICE = 841.2'
3. BOTTOM OF STORM SEWER = 842.51'
   TOP OF SANITARY = 841.33'
4. BOTTOM OF SANITARY = 834.30' (VIF)
   TOP OF STORM = 833.40'
5. BOTTOM OF STORM = 835.70'
   TOP OF SANITARY = 834.80' (VIF)
6. BOTTOM OF STORM =~~844.00'~~ ADD #1
   TOP OF SANITARY = 840.84'
7. BOTTOM OF STORM =~~844.10'~~ ADD #1
   TOP OF STORM = 843.68'
8. BOTTOM OF STORM = 842.88'
   TOP OF STORM = 842.30'
9. BOTTOM OF UNDERDRAIN = 845.54'
   TOP OF WATER = 840.52'
10. BOTTOM OF UNDERDRAIN = 844.96'
    TOP OF STORM = 842.22'
11. BOTTOM OF STORM =

STORM SEWER

1. EXISTING STORM SEWER TO REMAIN.
2. EXISTING FLARED END SECTION TO REMAIN.
3. EXISTING STORM STRUCTURE TO REMAIN.
4. NEW 12" PERFORATED ADS SLOTTED DRAIN, 25 L.F.
5. NEW 12"X12" HDPE WYE FITTING.
6. NEW 6" CLEANOUT.
7. NEW 12" HDPE, 33 L.F. @ 0.60% SLOPE.
8. NEW 48" DIA. PRECAST CONCRETE CLOSED LID MANHOLE.
9. NEW 12" HDPE, 97 L.F. @ 11.68% SLOPE.
10. NEW 48" DIA. PRECAST CONCRETE MANHOLE WITH OPEN RIM.
11. NEW 4" PERFORATED HDPE, 107 L.F. @ 0% SLOPE.
12. NEW CLEANOUT
13. NEW GRAVEL INFILTRATION BASIN. (SEE SECTION A-A ON SHEET C-6.6).
14. NEW 18" PERFORATED HDPE LEVEL SPREADER, 88 L.F.
15. NEW 18" HDPE, 5 L.F. @ 0% SLOPE.
16. NEW 48" DIA. PRECAST CONCRETE CATCH BASIN WITH OPEN RIM.
17. NEW 15" RCP, 41 L.F. @ 0.85% SLOPE.
18. NEW 48" DIA. PRECAST CONCRETE MANHOLE WITH OPEN RIM.
19. NEW 15" RCP, 25 L.F. @ 0.60% SLOPE.
20. NEW 48" DIA. PRECAST CONCRETE MANHOLE WITH OPEN RIM.
21. NEW 15" PVC SDR 26, 52 L.F. @ 0.50% SLOPE.
22. NEW 48" DIA. PRECAST CONCRETE MANHOLE WITH OPEN RIM.
23. NEW 15" RCP, 44 L.F. @ 0.45% SLOPE.
24. NEW 48" DIA. PRECAST CONCRETE CATCH BASIN WITH OPEN RIM.
25. NEW 12" RCP, 136 L.F. @ 0.59% SLOPE.
26. NEW 48" DIA PRECAST CONCRETE MANHOLE WITH OPEN RIM.
27. NEW 12" RCP, 54 L.F. @ 0.56% SLOPE.
28. NEW 48" DIA. PRECAST CONCRETE MANHOLE WITH OPEN RIM.
29. NEW 12" RCP, 13 L.F. @ 0.46% SLOPE.
30. NEW 48" DIA. PRECAST CONCRETE MANHOLE WITH OPEN RIM.
31. NEW 8" HDPE, 57 L.F. @ 1.47% SLOPE.
32. NEW 24" DIA. CONCRETE INLET WITH OPEN RIM.
33. NEW 12" RCP, 12 L.F. @ 1.67% SLOPE.
34. NEW 48" DIA. PRECAST CONCRETE MANHOLE WITH OPEN RIM.
35. NEW 8" HDPE, 44 L.F. @ 1.43% SLOPE.
36. NEW 24" DIA. CONCRETE INLET WITH OPEN RIM.
37. NEW 8" PVC, 31 L.F. @ 1.24% SLOPE.
38. NEW 24" DIA. CONCRETE INLET WITH OPEN RIM.
39. NEW 8" PVC, 71 L.F. @ 1.20% SLOPE.
40. NEW 24" DIA. CONCRETE INLET WITH OPEN RIM.
41. NEW 12" RCP, 57 L.F. @ 1.10% SLOPE.
42. NEW 24" DIA. PRECAST CONCRETE MANHOLE WITH OPEN RIM.
43. NEW 18" HDPE, 5 L.F. @ 0% SLOPE.
44. NEW 72" DIA. PRECAST CONCRETE CATCH BASIN WITH OVERFLOW PIPE. (SEE DETAIL ON SHEET C-6.7)
45. NEW 12" HDPE, 92 L.F. @ 0.43% SLOPE.
46. NEW 48" DIA. PRECAST CONCRETE MANHOLE WITH OPEN RIM.
47. NEW 8" HDPE, 36 L.F. @ 3.00 % SLOPE.
48. NEW 48" DIA. PRECAST CONCRETE MANHOLE WITH OPEN RIM.
49. NEW 4" PERFORATED PVC SDR 26, 134 L.F. @ 1.00% SLOPE.
50. NEW 4"X4" WYE FITTING. ADD #1
51. NEW PLAYGROUND CLEANOUT.
52. NEW 4"X4" WYE FITTING. ADD #1
53. NEW 4" PERFORATED PVC SDR 26, 80 L.F. @ 0.83% SLOPE.
54. NEW PLAYGROUND CLEANOUT.
55. NEW 4"X4" WYE FITTING. ADD #1
56. NEW 4" PERFORATED PVC SDR 30, 48 L.F. @ 0.56% SLOP.
57. NEW 4"X4" WYE FITTING.
58. NEW PLAYGROUND CLEANOUT. ADD #1
59. NEW 4" PERFORATED PVC SDR 26, 80 L.F. @ 0.50% SLOPE.
60. NEW PLAYGROUND CLEANOUT. ADD #1
61. NEW 4" PERFORATED PVC SDR 26, 39 L.F. @ 0.84% SLOPE.
62. NEW PLAYGROUND CLEANOUT.
63. NEW 4"X4" WYE FITTING. ADD #1
64. NEW 4" PERFORATED PVC SDR 26, 100 L.F. @ 0.75% SLOPE.
65. NEW PLAYGROUND CLEANOUT. ADD #1
66. NEW 4" PVC SDR 26, 31 L.F. @ 2.58% SLOPE.
67. NEW TYPE K100 ACO TRENCH DRAIN WITH 4" BOTTOM HUB OUTLET AND 451D STAINLESS STEEL GRATE, 23 L.F. @ 0.50% SLOPE. INSTALL PER MANUFACTURERS SPECIFICATIONS.
68. NEW ACO KI-6216 CATCH BASIN LOAD CLASS E. INSTALL PER MANUFACTURERS SPECIFICATIONS.
69. NEW TYPE K100 ACO TRENCH DRAIN WITH 451D STAINLESS STEEL GRATE, 30 L.F. @ 0.50% SLOPE. INSTALL PER MANUFACTURERS SPECIFICATIONS.
70. INSTALL SALVAGED FLARED END SECTION TO NEW 24" RCP.
71. NEW 24" RCP, 8 L.F. @ 0.40% SLOPE. CONNECT TO EXISTING 24" RCP WITH ALL FITTINGS REQUIRED. ADD #1
72. EXISTING OUTLET CONTROL STRUCTURE AND OVERFLOW WEIR.
73. NEW 6" PVC SDR 26, 40 L.F. @ 13.9% SLOPE.
74. NEW 24" DIA. PRECAST CONCRETE INLET WITH SOLID LID. ADD #1
75. NEW 8" PVC SDR 26, 75 L.F. @ 1% SLOPE.
76. NEW 12" RCP, 114 L.F. @ 0.50% SLOPE.
77. NEW 48" DIA. PRECAST CONCRETE MANHOLE WITH OPEN RIM.
78. NEW PERFORATED 6" HDPE UNDERDRAIN, 233 L.F. @ 0.52% SLOPE.
79. NEW 6" CLEANOUT.
80. NEW 12" RCP, 95 L.F. @ 0.47% SLOPE.
81. NEW 24" DIA. PRECAST CONCRETE INLET WITH OPEN RIM.
82. NEW 12" HDPE, 20 L.F. @ 2.00% SLOPE.
83. NEW 4" PERFORATED PVC SDR 26, 24 L.F. @ 0.69% SLOPE.
84. NEW 4"X4" WYE FITTINGS.
85. NEW 6" CLEANOUT. ADD #1
86. NEW 4" PERFORATED PVC SDR 26, 107 L.F. @ 1.02% SLOPE.
87. NEW 6" CLEANOUT. ADD #1
88. NEW 4" SCHEDULE 40 PIPE, 7 L.F. @ 2% MIN. SLOPE FOR SHUTDOWN PIT. PROVIDE GRATE ON TOP OF PIPE. ADD #1
89. NEW 24" DIA. PRECAST CONCRETE INLET WITH SOLID LID.
90. NEW 8" PVC SDR 26, 67 LF @ 1.04% SLOPE.
91. NEW 24" DIA. PRECAST CONCRETE INLET WITH SOLID LID.
92. NEW 8"x8" WYE CONNECTION.
93. NEW 8" PVC SDR 26, 29 LF @ 1% MIN. SLOPE. CONNECT UPSTREAM END TO NEW SPLASHPAD DRAIN.
94. NEW 8"x8" WYE CONNECTION.
95. NEW 8" PVC SDR 26, 25 LF @ 1% MIN. SLOPE. CONNECT UPSTREAM END TO NEW SPLASHPAD DRAIN.
96. NEW 8" PVC SDR 26, 45 L.F. @ 1% SLOPE CONNECT TO SPLASH PAD DRAIN.

OTHER UTILITY

1. EXISTING ELECTRIC METER TO REMAIN.
2. EXISTING TRANSFORMER TO REMAIN.
3. EXISTING GENERATOR TO REMAIN.
4. EXISTING STREET LIGHT TO REMAIN.
5. EXISTING LIGHT TO REMAIN.
6. EXISTING TELCO PEDESTAL TO REMAIN. ADD #1
7. NEW SPLASH PAD EQUIPMENT TO BE PROVIDED BY THE OWNER AND INSTALLED BY THE CONTRACTOR. SEE SPLASH PAD PLANS, PREPARED BY VORTEX AQUATIC STRUCTURES INTERNATIONAL, FOR EQUIPMENT LAYOUT AND INSTALLATION SPECIFICATIONS. SEE MEP PLANS FOR WATER AND SEWER PIPING TO AND FROM SPLASH PAD.
8. NEW TRANSFORMER. (SEE MEP PLANS FOR DETAILS)

WATER

GENERAL WATER NOTES:
- ALL FITTINGS SHALL HAVE MECHANICAL JOINTS RESTRAINED BY MEGALUG GLANDS.
- CONTRACTOR SHALL COORDINATE WATER TAPS WITH THE VILLAGE PUBLIC WORKS DEPARTMENT PRIOR THE CONSTRUCTION.

1. EXISTING 16" WATER MAIN TO REMAIN.
2. EXISTING VALVE VAULT TO REMAIN.
3. EXISTING FIRE HYDRANT TO REMAIN.
4. EXISTING B-BOX TO REMAIN.
5. CONNECT NEW WATER SERVICE TO EXISTING WATER MAIN VIA PRESSURE CONNECTION WITH STAINLESS STEEL TAPPING SLEEVE PER VILLAGE REQUIREMENTS.
6. NEW 4" DIA. DIP CL52 WATER SERVICE, 231 L.F. (SEE PLUMBING PLANS FOR CONTINUATION).
7. NEW 12" DIAMETER STEEL CASING PIPE TO BE DIRECTIONALLY DRILLED/BORED/AUGURED AND PUSHED UNDERNEATH FREEMAN ROAD, 93 L.F.
8. NEW 60" DIA. PRECAST CONCRETE VALVE VAULT.
9. NEW 11.25 DEGREE DIP CL52 ELBOW.
10. NEW 45 DEGREE DIP CL52 ELBOW.

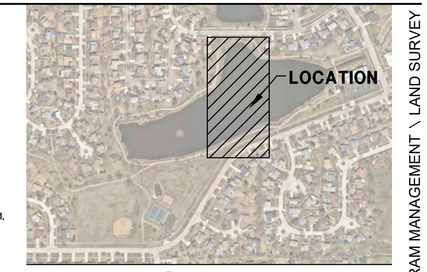

KEYMAP

SCALE: N.T.S.

NORTH

UTILITY LEGEND

- PROPOSED STORM SEWER
- PROPOSED SANITARY SEWER
- PROPOSED WATER SERVICE
- EXISTING SANITARY SEWER
- EXISTING WATER MAIN
- EXISTING STORM SEWER
- EXISTING MANHOLE
- EXISTING WATER STRUCTURE
- EXISTING B-BOX
- EXISTING STREET LIGHT
- EXISTING FIRE HYDRANT
- EXISTING UTILITY POLE
- EXISTING SIGN
- EXISTING FLARED END SECTION
- EXISTING TREE
- 000.00 PROPOSED RIM ELEVATION
- 000.00 PROPOSED INVERT ELEVATION
- FF FINISHED FLOOR ELEVATION
- ADJUST ADJUST EXISTING RIM ELEVATION
- PROPOSED FIRE HYDRANT
- PROPOSED VALVE WITH VAULT
- PROPOSED B-BOX
- PROPOSED INLET
- PROPOSED OPEN LID MANHOLE/CATCH BASIN
- PROPOSED CLOSED LID MANHOLE
- EXISTING TELCO PEDESTAL
- WETLAND BOUNDARY

SITE UTILITY NOTES:

A. CONTRACTOR SHALL CONTACT J.U.L.I.E. (811 OR 1-800-892-0123) AND PRIVATE LOCATING SERVICE TO LOCATE ALL UNDERGROUND UTILITY LINES PRIOR TO STARTING ANY DEMOLITION AND/OR EXCAVATION. EXACT LOCATIONS OF ANY EXISTING ELECTRIC, GAS, TELEPHONE, ETC. LINES ARE UNKNOWN.
B. CONTRACTOR TO UTILIZE CARE WHEN WORKING NEAR EXISTING UTILITIES TO REMAIN. ANY DAMAGE TO EXISTING UTILITIES NOT NOTED TO BE REMOVED SHALL BE REPAIRED AT THE CONTRACTOR'S EXPENSE AND TO THE SATISFACTION OF THE OWNER AND/OR ENGINEER.
C. CONTRACTOR SHALL EXCAVATE AND VERIFY IN FIELD ALL EXISTING UTILITY LOCATIONS, SIZES, CONDITIONS AND ELEVATIONS AT PROPOSED POINTS OF CONNECTION PRIOR TO ANY UNDERGROUND CONSTRUCTION. CONTRACTOR SHALL NOTIFY THE OWNER AND ENGINEER OF ANY DISCREPANCIES OR CONFLICTS PRIOR TO PROCEEDING WITH CONSTRUCTION.
D. REFER TO THE GENERAL NOTES AND SPECIFICATION SHEETS FOR ALL PIPE MATERIAL AND JOINT SPECIFICATIONS.
E. CONTRACTOR SHALL RESTORE ALL DISTURBED AREAS OUTSIDE OF CONSTRUCTION LIMITS TO ORIGINAL CONDITION OR BETTER.
F. CONTRACTOR SHALL VERIFY IN FIELD EXACT SIZE, MATERIAL, INVERT, PIPE ROUTING, AND SLOPE OF ALL EXISTING UTILITIES AND NOTIFY THE OWNER AND ENGINEER OF ANY DISCREPANCIES OR CONFLICTS PRIOR TO CONSTRUCTION.
G. THE CONTRACTOR IS RESPONSIBLE FOR THE STABILITY OF UTILITY TRENCHES DURING CONSTRUCTION AND SHALL PROVIDE TEMPORARY SHORING AND BRACING AS NECESSARY TO MAINTAIN STABILITY UNTIL CONSTRUCTION OF THE UTILITY IS COMPLETE IN ORDER TO MEET OSHA AND LOCAL CODES, AS WELL AS MANUFACTURER'S REQUIREMENTS.
H. ALL RCP STORM SEWER PIPE SHALL BE REINFORCED CONCRETE PIPE, CLASS IV, PER ASTM C-76 WITH FLEXIBLE (O-RING) GASKET JOINTS IN CONFORMANCE WITH ASTM C-443 AND SECTION 31-1.08 OF THE "STANDARD SPECIFICATIONS".
I. TRENCH BACKFILL MATERIAL SHALL BE PLACED AND COMPACTED TO A MINIMUM OF 95% MODIFIED PROCTOR DENSITY (ASTM D-1557) OVER ALL UNDERGROUND UTILITIES WHICH ARE CONSTRUCTED UNDER OR WITHIN 2 FEET OF ANY PROPOSED OR EXISTING PAVEMENT OR SIDEWALKS IN ACCORDANCE WITH THE STANDARD SPECIFICATIONS FOR ROAD AND BRIDGE CONSTRUCTION.
J. ADJUST RIM ELEVATIONS OF EXISTING STRUCTURES IN PAVEMENT AS NECESSARY TO MEET PROPOSED FINISHED GRADE.
K. CONTRACTOR TO COORDINATE ALL CONNECTIONS TO CITY UTILITIES AND STORM SEWERS WITH THE PUBLIC WORKS DEPARTMENT.
L. CONTRACTOR TO USE CAUTION WHEN EXCAVATING AT EXISTING UTILITY LINES.
M. ALL STORM MANHOLES SHALL HAVE OPEN LIDS UNLESS OTHERWISE SPECIFIED.
N. ALL EXISTING UTILITIES TO BE ABANDONED IN PLACE SHALL BE CAPPED WITH 2' LONG (MIN.) NON-SHRINK CONCRETE MORTAR PLUGS AT BOTH ENDS.
O. CONTRACTOR TO USE FLEXIBLE RUBBER BOOT THAT MEETS ASTM C923 WHERE PROPOSED SANITARY SEWER CONNECTS TO EXISTING MANHOLE.
P. PROVIDE RUBBER MISSION COUPLING OR SIMILAR CONNECTION BETWEEN PIPES OF DISSIMILAR SIZE OR MATERIAL.

NORTH

1" = 30'

00 15 30 60 120

WT GROUP
Engineering with Precision. Pace and Passion.
2675 Pratum Avenue | Hoffman Estates, IL 60192
T: 224.293.0503 F: 224.293.0444
wtengineering.com
IL License No: 184.007570-0015 Expires: 04.30.2021

© COPYRIGHT 2019 THE W-T GROUP, LLC

AQUATIC \ CIVIL \ MECHANICAL \ ELECTRICAL \ PLUMBING \ TELECOMMUNICATION \ STRUCTURAL \ ACCESSIBILITY CONSULTING \ DESIGN & PROGRAM MANAGEMENT \ LAND SURVEY

SOUTH RIDGE COMMUNITY PARK
ENHANCEMENT PLAN 2019
1450 FREEMAN ROAD
HOFFMAN ESTATES, IL 60192

heparks
making life fun

ISSUE

TO	DATE
MWRD	9/17/19
MWRD	10/22/19
VILLAGE	11/25/19
MWRD	1/2/20
SWCD	1/17/20
FOR BID	1/23/20
ADD #1	2/03/20

CHECK: CMS

DRAWN: PS

1911354C

C-6.2
SITE UTILITY PLAN

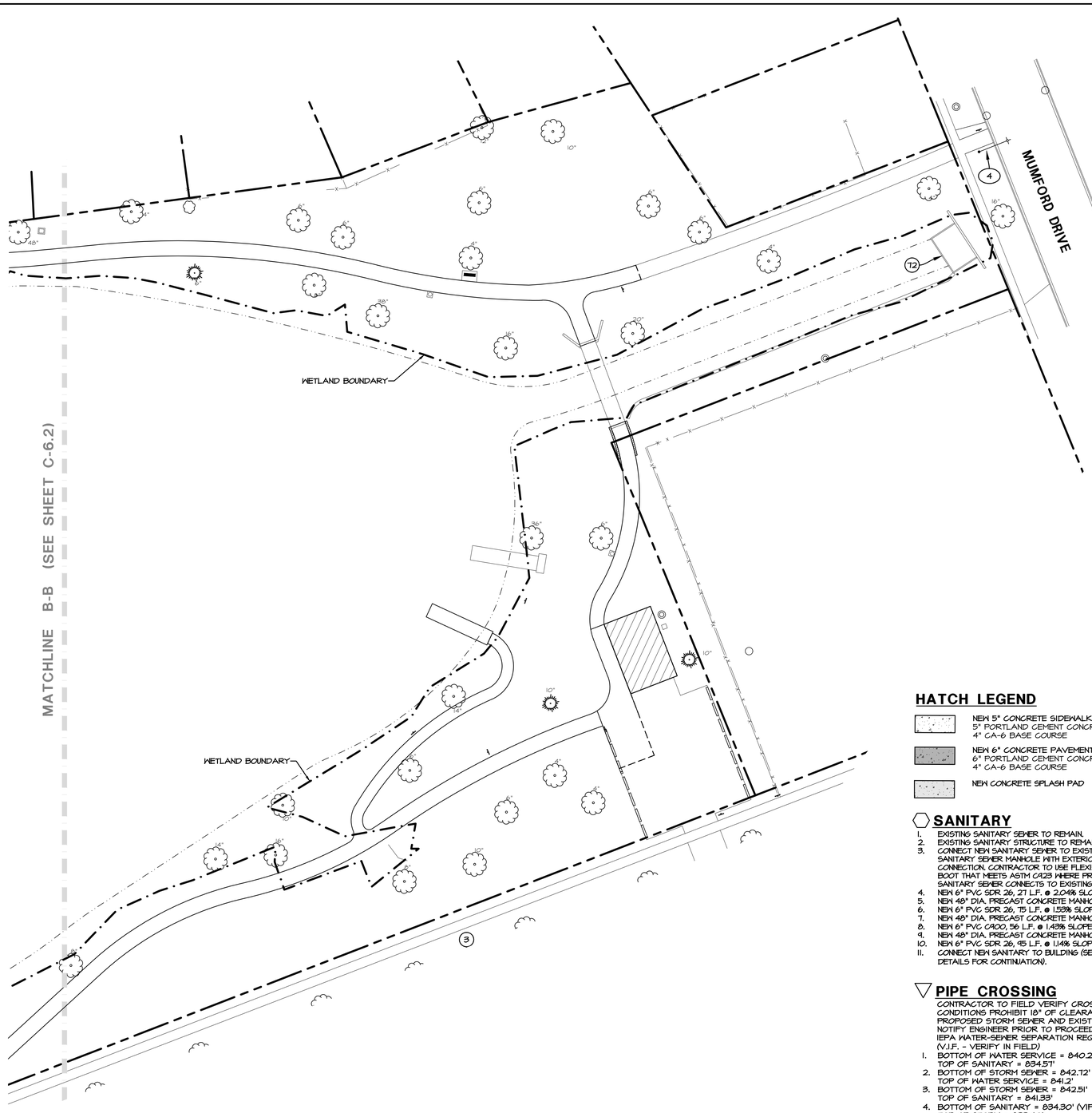

STORM SEWER

1. EXISTING STORM SEWER TO REMAIN.
2. EXISTING FLARED END SECTION TO REMAIN.
3. EXISTING STORM STRUCTURE TO REMAIN.
4. NEW 12" PERFORATED ADS SLOTTED DRAIN, 25 L.F.
5. NEW 12"X12" HDPE WYE FITTING.
6. NEW 6" CLEANOUT.
7. NEW 12" HDPE, 33 L.F. @ 0.60% SLOPE.
8. NEW 48" DIA. PRECAST CONCRETE CLOSED LID MANHOLE.
9. NEW 12" HDPE, 97 L.F. @ 11.6% SLOPE.
10. NEW 48" DIA. PRECAST CONCRETE MANHOLE WITH OPEN RIM.
11. NEW 4" PERFORATED HDPE, 107 L.F. @ 0% SLOPE.
12. NEW CLEANOUT
13. NEW GRAVEL INFILTRATION BASIN. (SEE SECTION A-A ON SHEET C-6.6).
14. NEW 18" PERFORATED HDPE LEVEL SPREADER, 88 L.F.
15. NEW 18" HDPE, 5 L.F. @ 0% SLOPE.
16. NEW 48" DIA. PRECAST CONCRETE CATCH BASIN WITH OPEN RIM.
17. NEW 15" RCP, 41 L.F. @ 0.85% SLOPE.
18. NEW 48" DIA. PRECAST CONCRETE MANHOLE WITH OPEN RIM.
19. NEW 15" RCP, 25 L.F. @ 0.60% SLOPE.
20. NEW 48" DIA. PRECAST CONCRETE MANHOLE WITH OPEN RIM.
21. NEW 15" PVC SDR 26, 52 L.F. @ 0.58% SLOPE.
22. NEW 48" DIA. PRECAST CONCRETE MANHOLE WITH OPEN RIM.
23. NEW 15" RCP, 44 L.F. @ 0.45% SLOPE.
24. NEW 48" DIA. PRECAST CONCRETE CATCH BASIN WITH OPEN RIM.
25. NEW 12" RCP, 136 L.F. @ 0.51% SLOPE.
26. NEW 48" DIA PRECAST CONCRETE MANHOLE WITH OPEN RIM.
27. NEW 12" RCP, 54 L.F. @ 0.56% SLOPE.
28. NEW 48" DIA. PRECAST CONCRETE MANHOLE WITH OPEN RIM.
29. NEW 12" RCP, 13 L.F. @ 0.46% SLOPE.
30. NEW 48" DIA. PRECAST CONCRETE MANHOLE WITH OPEN RIM.
31. NEW 8" HDPE, 57 L.F. @ 1.47% SLOPE.
32. NEW 24" DIA. CONCRETE INLET WITH OPEN RIM.
33. NEW 12" RCP, 12 L.F. @ 1.67% SLOPE.
34. NEW 48" DIA. PRECAST CONCRETE MANHOLE WITH OPEN RIM.
35. NEW 8" HDPE, 44 L.F. @ 1.43% SLOPE.
36. NEW 24" DIA. CONCRETE INLET WITH OPEN RIM.
37. NEW 8" PVC, 31 L.F. @ 1.29% SLOPE.
38. NEW 24" DIA. CONCRETE INLET WITH OPEN RIM.
39. NEW 8" PVC, 71 L.F. @ 1.20% SLOPE.
40. NEW 24" DIA. CONCRETE INLET WITH OPEN RIM.
41. NEW 12" RCP, 57 L.F. @ 1.10% SLOPE.
42. NEW 24" DIA. PRECAST CONCRETE MANHOLE WITH OPEN RIM.
43. NEW 18" HDPE, 5 L.F. @ 0% SLOPE.
44. NEW 72" DIA. PRECAST CONCRETE CATCH BASIN WITH OVERFLOW PIPE. (SEE DETAIL ON SHEET C-6.7)
45. NEW 12" HDPE, 42 L.F. @ 0.43% SLOPE.
46. NEW 48" DIA. PRECAST CONCRETE MANHOLE WITH OPEN RIM.
47. NEW 8" HDPE, 36 L.F. @ 3.00 % SLOPE.
48. NEW 48" DIA. PRECAST CONCRETE MANHOLE WITH OPEN RIM.
49. NEW 4" PERFORATED PVC SDR 26, 134 L.F. @ 1.00% SLOPE.
50. NEW 4"X4" WYE FITTING. ADD #1
51. NEW PLAYGROUND CLEANOUT.
52. NEW 4"X4" WYE FITTING. ADD #1
53. NEW 4" PERFORATED PVC SDR 26, 80 L.F. @ 0.63% SLOPE.
54. NEW PLAYGROUND CLEANOUT.
55. NEW 4"X4" WYE FITTING. ADD #1
56. NEW 4" PERFORATED PVC SDR 30, 48 L.F. @ 0.56% SLOP.
57. NEW 4"X4" WYE FITTING.
58. NEW PLAYGROUND CLEANOUT. ADD #1
59. NEW 4" PERFORATED PVC SDR 26, 80 L.F. @ 0.50% SLOPE.
60. NEW PLAYGROUND CLEANOUT. ADD #1
61. NEW 4" PERFORATED PVC SDR 26, 39 L.F. @ 0.84% SLOPE.
62. NEW PLAYGROUND CLEANOUT.
63. NEW 4"X4" WYE FITTING. ADD #1
64. NEW 4" PERFORATED PVC SDR 26, 100 L.F. @ 0.75% SLOPE.
65. NEW PLAYGROUND CLEANOUT. ADD #1
66. NEW (4" PVC SDR 26) 31 L.F. @ 2.58% SLOPE.
67. NEW TYPE K100 ACO TRENCH DRAIN WITH 4" BOTTOM HUB OUTLET AND 451D STAINLESS STEEL GRATE, 23 L.F. @ 0.50% SLOPE. INSTALL PER MANUFACTURERS SPECIFICATIONS.
68. NEW ACO K1-6216 CATCH BASIN LOAD CLASS E. INSTALL PER MANUFACTURERS SPECIFICATIONS.
69. NEW TYPE K100 ACO TRENCH DRAIN WITH 451D STAINLESS STEEL GRATE, 30 L.F. @ 0.50% SLOPE. INSTALL PER MANUFACTURERS SPECIFICATIONS.
70. INSTALL SALVAGED FLARED END SECTION TO NEW 24" RCP.
71. NEW 24" RCP, 8 L.F. @ 0.40% SLOPE. CONNECT TO EXISTING 24" RCP WITH ALL FITTINGS REQUIRED. ADD #1
72. EXISTING OUTLET CONTROL STRUCTURE AND OVERFLOW WEIR.
73. NEW 6" PVC SDR 26, 40 L.F. @ 15.8% SLOPE.
74. NEW 24" DIA. PRECAST CONCRETE INLET WITH SOLID LID. ADD #1
75. NEW 8" PVC SDR 26, 75 L.F. @ 1% SLOPE.
76. NEW 12" RCP, 114 L.F. @ 0.50% SLOPE.
77. NEW 48" DIA. PRECAST CONCRETE MANHOLE WITH OPEN RIM.
78. NEW PERFORATED 6" HDPE UNDERDRAIN, 233 L.F. @ 0.52% SLOPE.
79. NEW 6" CLEANOUT.
80. NEW 12" RCP, 45 L.F. @ 0.47% SLOPE.
81. NEW 24" DIA. PRECAST CONCRETE INLET WITH OPEN RIM.
82. NEW 12" HDPE, 20 L.F. @ 2.00% SLOPE.
83. NEW 4" PERFORATED PVC SDR 26, 24 L.F. @ 0.69% SLOPE.
84. NEW 4"X4" WYE FITTING.
85. NEW 6" CLEANOUT. ADD #1
86. NEW 4" PERFORATED PVC SDR 26, 107 L.F. @ 1.02% SLOPE.
87. NEW 6" CLEANOUT. ADD #1
88. NEW 4" SCHEDULE 40 PIPE, 7 L.F. @ 2% MIN. SLOPE FOR SHUTDOWN PIT. PROVIDE GRATE ON TOP OF PIPE. ADD #1
89. NEW 24" DIA. PRECAST CONCRETE INLET WITH SOLID LID.
90. NEW 8" PVC SDR 26, 67 LF @ 1.04% SLOPE.
91. NEW 24" DIA. PRECAST CONCRETE INLET WITH SOLID LID.
92. NEW 8"x8" WYE CONNECTION.
93. NEW 8" PVC SDR 26, 24 LF @ 1% MIN. SLOPE. CONNECT UPSTREAM END TO NEW SPLASHPAD DRAIN.
94. NEW 8"x8" WYE CONNECTION.
95. NEW 8" PVC SDR 26, 25 LF @ 1% MIN. SLOPE. CONNECT UPSTREAM END TO NEW SPLASHPAD DRAIN.
96. NEW 8" PVC SDR 26, 45 L.F. @ 1% SLOPE CONNECT TO SPLASH PAD DRAIN.

HATCH LEGEND

NEW 5" CONCRETE SIDEWALK
5" PORTLAND CEMENT CONCRETE
4" CA-6 BASE COURSE

NEW 6" CONCRETE PAVEMENT
6" PORTLAND CEMENT CONCRETE
4" CA-6 BASE COURSE

NEW CONCRETE SPLASH PAD

SANITARY

1. EXISTING SANITARY SEWER TO REMAIN.
2. EXISTING SANITARY STRUCTURE TO REMAIN.
3. CONNECT NEW SANITARY SEWER TO EXISTING SANITARY SEWER MANHOLE WITH EXTERIOR DROP CONNECTION. CONTRACTOR TO USE FLEXIBLE RUBBER BOOT THAT MEETS ASTM C923 WHERE PROPOSED SANITARY SEWER CONNECTS TO EXISTING MANHOLE.
4. NEW 6" PVC SDR 26, 27 L.F. @ 2.04% SLOPE.
5. NEW 48" DIA. PRECAST CONCRETE MANHOLE
6. NEW 6" PVC SDR 26, 75 L.F. @ 1.53% SLOPE.
7. NEW 48" DIA. PRECAST CONCRETE MANHOLE.
8. NEW 6" PVC C900, 56 L.F. @ 1.43% SLOPE.
9. NEW 48" DIA. PRECAST CONCRETE MANHOLE.
10. NEW 6" PVC SDR 26, 95 L.F. @ 1.14% SLOPE
11. CONNECT NEW SANITARY TO BUILDING (SEE PLUMBING DETAILS FOR CONTINUATION).

PIPE CROSSING

CONTRACTOR TO FIELD VERIFY CROSSINGS. IF FIELD CONDITIONS PROHIBIT 18" OF CLEARANCE BETWEEN PROPOSED STORM SEWER AND EXISTING WATER MAIN, NOTIFY ENGINEER PRIOR TO PROCEEDING. FOLLOW IEPA WATER-SEWER SEPARATION REQUIREMENTS. (V.I.F. - VERIFY IN FIELD)

1. BOTTOM OF WATER SERVICE = 840.2' (V.I.F.)
   TOP OF SANITARY = 834.57'
2. BOTTOM OF STORM SEWER = 842.72'
   TOP OF WATER SERVICE = 841.2'
3. BOTTOM OF STORM SEWER = 842.51'
   TOP OF SANITARY = 841.33'
4. BOTTOM OF SANITARY = 834.30' (VIF)
   TOP OF STORM = 833.40'
5. BOTTOM OF STORM = 835.70'
   TOP OF SANITARY = 834.80' (VIF)
6. BOTTOM OF STORM = 844.00' ADD #1
   TOP OF SANITARY = 840.84'
7. BOTTOM OF STORM = 844.10' ADD #1
   TOP OF STORM = 843.68'
8. BOTTOM OF STORM = 842.88'
   TOP OF STORM = 842.30'
9. BOTTOM OF UNDERDRAIN = 845.54'
   TOP OF WATER = 840.52'
10. BOTTOM OF UNDERDRAIN = 844.96'
    TOP OF STORM = 842.22'

OTHER UTILITY

1. EXISTING ELECTRIC METER TO REMAIN.
2. EXISTING TRANSFORMER TO REMAIN.
3. EXISTING GENERATOR TO REMAIN.
4. EXISTING STREET LIGHT TO REMAIN.
5. EXISTING LIGHT TO REMAIN.
6. EXISTING TELCO PEDESTAL TO REMAIN. ADD #1
7. NEW SPLASH PAD EQUIPMENT TO BE PROVIDED BY THE OWNER AND INSTALLED BY THE CONTRACTOR. SEE SPLASH PAD PLANS, PREPARED BY VORTEX AQUATIC STRUCTURES INTERNATIONAL, FOR EQUIPMENT LAYOUT AND INSTALLATION SPECIFICATIONS. SEE MEP PLANS FOR WATER AND SEWER PIPING TO AND FROM SPLASH PAD.
8. NEW TRANSFORMER. (SEE MEP PLANS FOR DETAILS)

WATER

GENERAL WATER NOTES:
- ALL FITTINGS SHALL HAVE MECHANICAL JOINTS RESTRAINED BY MEGALUG GLANDS.
- CONTRACTOR SHALL COORDINATE WATER TAPS WITH THE VILLAGE PUBLIC WORKS DEPARTMENT PRIOR THE CONSTRUCTION.

1. EXISTING 16" WATER MAIN TO REMAIN.
2. EXISTING VALVE VAULT TO REMAIN.
3. EXISTING FIRE HYDRANT TO REMAIN.
4. EXISTING B-BOX TO REMAIN.
5. CONNECT NEW WATER SERVICE TO EXISTING WATER MAIN VIA PRESSURE CONNECTION WITH STAINLESS STEEL TAPPING SLEEVE PER VILLAGE REQUIREMENTS.
6. NEW 4" DIA. DIP CL52 WATER SERVICE, 231 L.F. (SEE PLUMBING PLANS FOR CONTINUATION).
7. NEW 12" DIAMETER STEEL CASING PIPE TO BE DIRECTIONALLY DRILLED/BORED/AUGURED AND PUSHED UNDERNEATH FREEMAN ROAD, 93 L.F.
8. NEW 60" DIA. PRECAST CONCRETE VALVE VAULT.
9. NEW 11.25 DEGREE DIP CL52 ELBOW.
10. NEW 45 DEGREE DIP CL52 ELBOW.

KEYMAP

SCALE: N.T.S.

NORTH

UTILITY LEGEND

- PROPOSED STORM SEWER
- PROPOSED SANITARY SEWER
- PROPOSED WATER SERVICE
- EXISTING SANITARY SEWER
- EXISTING WATER MAIN
- EXISTING STORM SEWER
- EXISTING MANHOLE
- EXISTING WATER STRUCTURE
- EXISTING B-BOX
- EXISTING STREET LIGHT
- EXISTING FIRE HYDRANT
- EXISTING UTILITY POLE
- EXISTING SIGN
- EXISTING FLARED END SECTION
- EXISTING TREE
- 000.00 PROPOSED RIM ELEVATION
- 000.00 PROPOSED INVERT ELEVATION
- FF FINISHED FLOOR ELEVATION
- ADJUST ADJUST EXISTING RIM ELEVATION
- PROPOSED FIRE HYDRANT
- PROPOSED VALVE WITH VAULT
- PROPOSED B-BOX
- PROPOSED INLET
- PROPOSED OPEN LID MANHOLE/CATCH BASIN
- PROPOSED CLOSED LID MANHOLE
- EXISTING TELCO PEDESTAL
- WETLAND BOUNDARY

SITE UTILITY NOTES:

A. CONTRACTOR SHALL CONTACT J.U.L.I.E. (811 OR 1-800-892-0123) AND PRIVATE LOCATING SERVICE TO LOCATE ALL UNDERGROUND UTILITY LINES PRIOR TO STARTING ANY DEMOLITION AND/OR EXCAVATION. EXACT LOCATIONS OF ANY EXISTING ELECTRIC, GAS, TELEPHONE, ETC. LINES ARE UNKNOWN.
B. CONTRACTOR TO UTILIZE CARE WHEN WORKING NEAR EXISTING UTILITIES TO REMAIN. ANY DAMAGE TO EXISTING UTILITIES NOT NOTED TO BE REMOVED SHALL BE REPAIRED AT THE CONTRACTOR'S EXPENSE AND TO THE SATISFACTION OF THE OWNER AND/OR ENGINEER.
C. CONTRACTOR SHALL EXCAVATE AND VERIFY IN FIELD ALL EXISTING UTILITY LOCATIONS, SIZES, CONDITIONS AND ELEVATIONS AT PROPOSED POINTS OF CONNECTION PRIOR TO ANY UNDERGROUND CONSTRUCTION. CONTRACTOR SHALL NOTIFY THE OWNER AND ENGINEER OF ANY DISCREPANCIES OR CONFLICTS PRIOR TO PROCEEDING WITH CONSTRUCTION.
D. REFER TO THE GENERAL NOTES AND SPECIFICATION SHEETS FOR ALL PIPE MATERIAL AND JOINT SPECIFICATIONS.
E. CONTRACTOR SHALL RESTORE ALL DISTURBED AREAS OUTSIDE OF CONSTRUCTION LIMITS TO ORIGINAL CONDITION OR BETTER.
F. CONTRACTOR SHALL VERIFY IN FIELD EXACT SIZE, MATERIAL, INVERT, PIPE ROUTING, AND SLOPE OF ALL EXISTING UTILITIES AND NOTIFY THE OWNER AND ENGINEER OF ANY DISCREPANCIES OR CONFLICTS PRIOR TO CONSTRUCTION.
G. THE CONTRACTOR IS RESPONSIBLE FOR THE STABILITY OF UTILITY TRENCHES DURING CONSTRUCTION AND SHALL PROVIDE TEMPORARY SHORING AND BRACING AS NECESSARY TO MAINTAIN STABILITY UNTIL CONSTRUCTION OF THE UTILITY IS COMPLETE IN ORDER TO MEET OSHA AND LOCAL CODES, AS WELL AS MANFACTURER'S REQUIREMENTS.
H. ALL RCP STORM SEWER PIPE SHALL BE REINFORCED CONCRETE PIPE, CLASS IV, PER ASTM C-76 WITH FLEXIBLE (O-RING) GASKET JOINTS IN CONFORMANCE WITH ASTM C-443 AND SECTION 31-1.08 OF THE "STANDARD SPECIFICATIONS".
I. TRENCH BACKFILL MATERIAL SHALL BE PLACED AND COMPACTED TO A MINIMUM OF 95% MODIFIED PROCTOR DENSITY (ASTM D-1557) OVER ALL UNDERGROUND UTILITIES WHICH ARE CONSTRUCTED UNDER OR WITHIN 2 FEET OF ANY PROPOSED OR EXISTING PAVEMENT OR SIDEWALKS IN ACCORDANCE WITH THE STANDARD SPECIFICATIONS FOR ROAD AND BRIDGE CONSTRUCTION.
J. ADJUST RIM ELEVATIONS OF EXISTING STRUCTURES IN PAVEMENT AS NECESSARY TO MEET PROPOSED FINISHED GRADE.
K. CONTRACTOR TO COORDINATE ALL CONNECTIONS TO CITY UTILITIES AND STORM SEWERS WITH THE PUBLIC WORKS DEPARTMENT.
L. CONTRACTOR TO USE CAUTION WHEN EXCAVATING AT EXISTING UTILITY LINES.
M. ALL STORM MANHOLES SHALL HAVE OPEN LIDS UNLESS OTHERWISE SPECIFIED.
N. ALL EXISTING UTILITIES TO BE ABANDONED IN PLACE SHALL BE CAPPED WITH 2' LONG (MIN.) NON-SHRINK CONCRETE MORTAR PLUGS AT BOTH ENDS.
O. CONTRACTOR TO USE FLEXIBLE RUBBER BOOT THAT MEETS ASTM C923 WHERE PROPOSED SANITARY SEWER CONNECTS TO EXISTING MANHOLE.
P. PROVIDE RUBBER MISSION COUPLING OR SIMILAR CONNECTION BETWEEN PIPES OF DISSIMILAR SIZE OR MATERIAL.

NORTH

1" = 30'

00 15 30 60 120

AQUATIC \ CIVIL \ MECHANICAL \ ELECTRICAL \ PLUMBING \ TELECOMMUNICATION \ STRUCTURAL \ ACCESSIBILITY CONSULTING \ DESIGN & PROGRAM MANAGEMENT \ LAND SURVEY

WT GROUP
Engineering with Precision, Place and Passion.
2675 Pratum Avenue | Hoffman Estates, IL 60192
T: 224.293.0501 F: 224.293.0544
wtengineering.com
IL License No: 184.007570-0015 Expires: 04.30.2021

© COPYRIGHT 2019 THE W-T GROUP, LLC

WT Group
Engineering • Design • Consulting

SOUTH RIDGE COMMUNITY PARK
ENHANCEMENT PLAN 2019
1450 FREEMAN ROAD
HOFFMAN ESTATES, IL 60192

heparks
making life fun

ISSUE

TO	DATE
MWRD	9/17/19
MWRD	10/22/19
VILLAGE	11/25/19
MWRD	1/2/20
SWCD	1/17/20
FOR BID	1/23/20
ADD #1	2/03/20

CHECK: CMS

DRAWN: PS

1911354C

C-6.3
SITE UTILITY PLAN

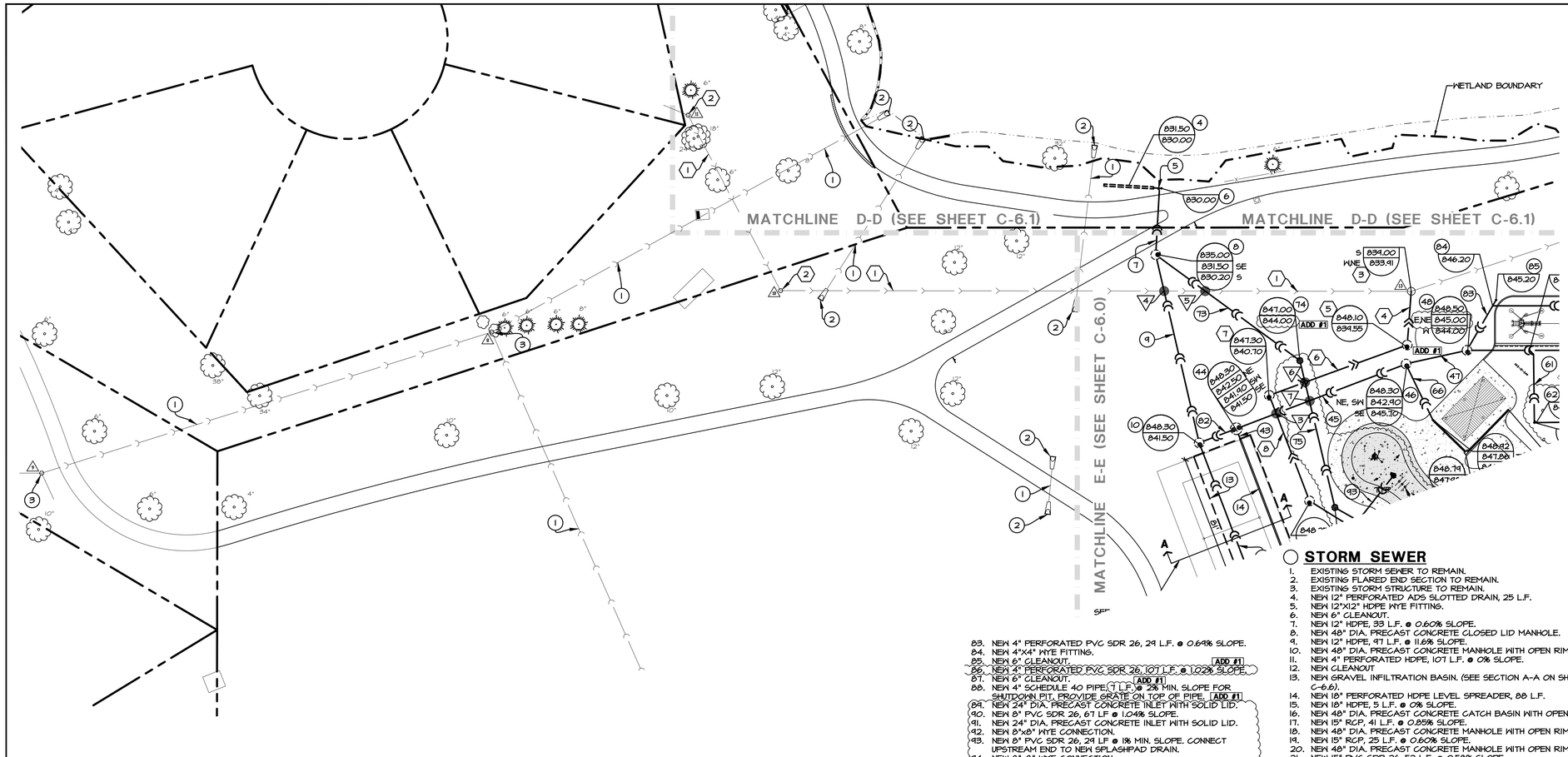

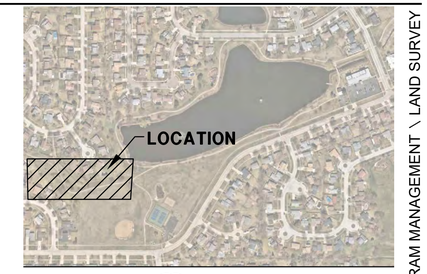

KEYMAP

SCALE: N.T.S.

NORTH

UTILITY LEGEND

- PROPOSED STORM SEWER
- PROPOSED SANITARY SEWER
- PROPOSED WATER SERVICE
- EXISTING SANITARY SEWER
- EXISTING WATER MAIN
- EXISTING STORM SEWER
- EXISTING MANHOLE
- EXISTING WATER STRUCTURE
- EXISTING B-BOX
- EXISTING STREET LIGHT
- EXISTING FIRE HYDRANT
- EXISTING UTILITY POLE
- EXISTING SIGN
- EXISTING FLARED END SECTION
- EXISTING TREE
- 000.00 PROPOSED RIM ELEVATION
- 000.00 PROPOSED INVERT ELEVATION
- FF FINISHED FLOOR ELEVATION
- ADJUST ADJUST EXISTING RIM ELEVATION
- PROPOSED FIRE HYDRANT
- PROPOSED VALVE WITH VAULT
- PROPOSED B-BOX
- PROPOSED INLET
- PROPOSED OPEN LID MANHOLE/CATCH BASIN
- PROPOSED CLOSED LID MANHOLE
- EXISTING TELCO PEDESTAL
- WETLAND BOUNDARY

SITE UTILITY NOTES:

A. CONTRACTOR SHALL CONTACT J.U.L.I.E. (811 OR 1-800-892-0123) AND PRIVATE LOCATING SERVICE TO LOCATE ALL UNDERGROUND UTILITY LINES PRIOR TO STARTING ANY DEMOLITION AND/OR EXCAVATION. EXACT LOCATIONS OF ANY EXISTING ELECTRIC, GAS, TELEPHONE, ETC. LINES ARE UNKNOWN.

B. CONTRACTOR TO UTILIZE CARE WHEN WORKING NEAR EXISTING UTILITIES TO REMAIN. ANY DAMAGE TO EXISTING UTILITIES NOT NOTED TO BE REMOVED SHALL BE REPAIRED AT THE CONTRACTOR'S EXPENSE AND TO THE SATISFACTION OF THE OWNER AND/OR ENGINEER.

C. CONTRACTOR SHALL EXCAVATE AND VERIFY IN FIELD ALL EXISTING UTILITY LOCATIONS, SIZES, CONDITIONS AND ELEVATIONS AT PROPOSED POINTS OF CONNECTION PRIOR TO ANY UNDERGROUND CONSTRUCTION. CONTRACTOR SHALL NOTIFY THE OWNER AND ENGINEER OF ANY DISCREPANCIES OR CONFLICTS PRIOR TO PROCEEDING WITH CONSTRUCTION.

D. REFER TO THE GENERAL NOTES AND SPECIFICATION SHEETS FOR ALL PIPE MATERIAL AND JOINT SPECIFICATIONS.

E. CONTRACTOR SHALL RESTORE ALL DISTURBED AREAS OUTSIDE OF CONSTRUCTION LIMITS TO ORIGINAL CONDITION OR BETTER.

F. CONTRACTOR SHALL VERIFY IN FIELD EXACT SIZE, MATERIAL, INVERT, PIPE ROUTING, AND SLOPE OF ALL EXISTING UTILITIES AND NOTIFY THE OWNER AND ENGINEER OF ANY DISCREPANCIES OR CONFLICTS PRIOR TO CONSTRUCTION.

G. THE CONTRACTOR IS RESPONSIBLE FOR THE STABILITY OF UTILITY TRENCHES DURING CONSTRUCTION AND SHALL PROVIDE TEMPORARY SHORING AND BRACING AS NECESSARY TO MAINTAIN STABILITY UNTIL CONSTRUCTION OF THE UTILITY IS COMPLETE IN ORDER TO MEET OSHA AND LOCAL CODES, AS WELL AS MANUFACTURER'S REQUIREMENTS.

H. ALL RCP STORM SEWER PIPE SHALL BE REINFORCED CONCRETE PIPE, CLASS IV, PER ASTM C-76 WITH FLEXIBLE (O-RING) GASKET JOINTS IN CONFORMANCE WITH ASTM C-443 AND SECTION 31-1.08 OF THE "STANDARD SPECIFICATIONS".

I. TRENCH BACKFILL MATERIAL SHALL BE PLACED AND COMPACTED TO A MINIMUM OF 95% MODIFIED PROCTOR DENSITY (ASTM D-1557) OVER ALL UNDERGROUND UTILITIES WHICH ARE CONSTRUCTED UNDER OR WITHIN 2 FEET OF ANY PROPOSED OR EXISTING PAVEMENT OR SIDEWALKS IN ACCORDANCE WITH THE STANDARD SPECIFICATIONS FOR ROAD AND BRIDGE CONSTRUCTION.

J. ADJUST RIM ELEVATIONS OF EXISTING STRUCTURES IN PAVEMENT AS NECESSARY TO MEET PROPOSED FINISHED GRADE.

K. CONTRACTOR TO COORDINATE ALL CONNECTIONS TO CITY UTILITIES AND STORM SEWERS WITH THE PUBLIC WORKS DEPARTMENT.

L. CONTRACTOR TO USE CAUTION WHEN EXCAVATING AT EXISTING UTILITY LINES.

M. ALL STORM MANHOLES SHALL HAVE OPEN LIDS UNLESS OTHERWISE SPECIFIED.

N. ALL EXISTING UTILITIES TO BE ABANDONED IN PLACE SHALL BE CAPPED WITH 2' LONG (MIN.) NON-SHRINK CONCRETE MORTAR PLUGS AT BOTH ENDS.

O. CONTRACTOR TO USE FLEXIBLE RUBBER BOOT THAT MEETS ASTM C423 WHERE PROPOSED SANITARY SEWER CONNECTS TO EXISTING MANHOLE.

P. PROVIDE RUBBER MISSION COUPLING OR SIMILAR CONNECTION BETWEEN PIPES OF DISSIMILAR SIZE OR MATERIAL.

NORTH

1" = 30'

00 15 30 60 120

STORM SEWER

1. EXISTING STORM SEWER TO REMAIN.
2. EXISTING FLARED END SECTION TO REMAIN.
3. EXISTING STORM STRUCTURE TO REMAIN.
4. NEW 12" PERFORATED ADS SLOTTED DRAIN, 25 L.F.
5. NEW 12"X12" HDPE WYE FITTING.
6. NEW 6" CLEANOUT.
7. NEW 12" HDPE, 33 L.F. @ 0.60% SLOPE.
8. NEW 48" DIA. PRECAST CONCRETE CLOSED LID MANHOLE.
9. NEW 12" HDPE, 97 L.F. @ 11.6% SLOPE.
10. NEW 48" DIA. PRECAST CONCRETE MANHOLE WITH OPEN RIM.
11. NEW 4" PERFORATED HDPE, 107 L.F. @ 0% SLOPE.
12. NEW CLEANOUT
13. NEW GRAVEL INFILTRATION BASIN. (SEE SECTION A-A ON SHEET C-6.6).
14. NEW 18" PERFORATED HDPE LEVEL SPREADER, 88 L.F.
15. NEW 18" HDPE, 5 L.F. @ 0% SLOPE.
16. NEW 48" DIA. PRECAST CONCRETE CATCH BASIN WITH OPEN RIM.
17. NEW 15" RCP, 41 L.F. @ 0.85% SLOPE.
18. NEW 48" DIA. PRECAST CONCRETE MANHOLE WITH OPEN RIM.
19. NEW 15" RCP, 25 L.F. @ 0.60% SLOPE.
20. NEW 48" DIA. PRECAST CONCRETE MANHOLE WITH OPEN RIM.
21. NEW 15" PVC SDR 26, 52 L.F. @ 0.58% SLOPE.
22. NEW 48" DIA. PRECAST CONCRETE MANHOLE WITH OPEN RIM.
23. NEW 15" RCP, 44 L.F. @ 0.45% SLOPE.
24. NEW 48" DIA. PRECAST CONCRETE CATCH BASIN WITH OPEN RIM.
25. NEW 12" RCP, 136 L.F. @ 0.54% SLOPE.
26. NEW 48" DIA PRECAST CONCRETE MANHOLE WITH OPEN RIM.
27. NEW 12" RCP, 54 L.F. @ 0.56% SLOPE.
28. NEW 48" DIA. PRECAST CONCRETE MANHOLE WITH OPEN RIM.
29. NEW 12" RCP, 13 L.F. @ 0.46% SLOPE.
30. NEW 48" DIA. PRECAST CONCRETE MANHOLE WITH OPEN RIM.
31. NEW 8" HDPE, 57 L.F. @ 1.47% SLOPE.
32. NEW 24" DIA. CONCRETE INLET WITH OPEN RIM.
33. NEW 12" RCP, 12 L.F. @ 1.67% SLOPE.
34. NEW 48" DIA. PRECAST CONCRETE MANHOLE WITH OPEN RIM.
35. NEW 8" HDPE, 49 L.F. @ 1.43% SLOPE.
36. NEW 24" DIA. CONCRETE INLET WITH OPEN RIM.
37. NEW 8" PVC, 31 L.F. @ 1.29% SLOPE.
38. NEW 24" DIA. CONCRETE INLET WITH OPEN RIM.
39. NEW 8" PVC, 71 L.F. @ 1.20% SLOPE.
40. NEW 24" DIA. CONCRETE INLET WITH OPEN RIM.
41. NEW 12" RCP, 57 L.F. @ 1.10% SLOPE.
42. NEW 24" DIA. PRECAST CONCRETE MANHOLE WITH OPEN RIM.
43. NEW 18" HDPE, 5 L.F. @ 0% SLOPE.
44. NEW 72" DIA. PRECAST CONCRETE CATCH BASIN WITH OVERFLOW PIPE. (SEE DETAIL ON SHEET C-6.1)
45. NEW 12" HDPE, 42 L.F. @ 0.43% SLOPE.
46. NEW 48" DIA. PRECAST CONCRETE MANHOLE WITH OPEN RIM.
47. NEW 8" HDPE, 36 L.F. @ 3.00 % SLOPE.
48. NEW 48" DIA. PRECAST CONCRETE MANHOLE WITH OPEN RIM.
49. NEW 4" PERFORATED PVC SDR 26, 134 L.F. @ 1.00% SLOPE. ADD #1
50. NEW 4"X4" WYE FITTING.
51. NEW PLAYGROUND CLEANOUT.
52. NEW 4"X4" WYE FITTING. ADD #1
53. NEW 4" PERFORATED PVC SDR 26, 80 L.F. @ 0.63% SLOPE.
54. NEW PLAYGROUND CLEANOUT.
55. NEW 4"X4" WYE FITTING. ADD #1
56. NEW 4" PERFORATED PVC SDR 30, 48 L.F. @ 0.56% SLOP.
57. NEW 4"X4" WYE FITTING.
58. NEW PLAYGROUND CLEANOUT. ADD #1
59. NEW 4" PERFORATED PVC SDR 26, 80 L.F. @ 0.50% SLOPE.
60. NEW PLAYGROUND CLEANOUT. ADD #1
61. NEW 4" PERFORATED PVC SDR 26, 39 L.F. @ 0.84% SLOPE.
62. NEW PLAYGROUND CLEANOUT.
63. NEW 4"X4" WYE FITTING. ADD #1
64. NEW 4" PERFORATED PVC SDR 26, 100 L.F. @ 0.75% SLOPE.
65. NEW PLAYGROUND CLEANOUT. ADD #1
66. NEW (4" PVC SDR 26) 31 L.F. @ 2.58% SLOPE.
67. NEW TYPE K100 ACO TRENCH DRAIN WITH 4" BOTTOM HUB OUTLET AND 45ID STAINLESS STEEL GRATE, 23 L.F. @ 0.50% SLOPE. INSTALL PER MANUFACTURERS SPECIFICATIONS.
68. NEW ACO K1-6216 CATCH BASIN LOAD CLASS E. INSTALL PER MANUFACTURERS SPECIFICATIONS.
69. NEW TYPE K100 ACO TRENCH DRAIN WITH 45ID STAINLESS STEEL GRATE, 30 L.F. @ 0.50% SLOPE. INSTALL PER MANUFACTURERS SPECIFICATIONS.
70. INSTALL SALVAGED FLARED END SECTION TO NEW 24" RCP.
71. NEW 24" RCP, 8 L.F. @ 0.40% SLOPE. CONNECT TO EXISTING 24" RCP WITH ALL FITTINGS REQUIRED. ADD #1
72. EXISTING OUTLET CONTROL STRUCTURE AND OVERFLOW WEIR.
73. NEW 6" PVC SDR 26, 90 L.F. @ 13.9% SLOPE.
74. NEW 24" DIA. PRECAST CONCRETE INLET WITH SOLID LID. ADD #1
75. NEW 8" PVC SDR 26, 75 L.F. @ 1% SLOPE.
76. NEW 12" RCP, 114 L.F. @ 0.50% SLOPE.
77. NEW 48" DIA. PRECAST CONCRETE MANHOLE WITH OPEN RIM.
78. NEW PERFORATED 6" HDPE UNDERDRAIN, 233 L.F. @ 0.52% SLOPE.
79. NEW 6" CLEANOUT.
80. NEW 12" RCP, 95 L.F. @ 0.47% SLOPE.
81. NEW 24" DIA. PRECAST CONCRETE INLET WITH OPEN RIM.
82. NEW 12" HDPE, 20 L.F. @ 2.00% SLOPE.
83. NEW 4" PERFORATED PVC SDR 26, 29 L.F. @ 0.69% SLOPE.
84. NEW 4"X4" WYE FITTING.
85. NEW 6" CLEANOUT. ADD #1
86. NEW 4" PERFORATED PVC SDR 26, 107 L.F. @ 1.02% SLOPE.
87. NEW 6" CLEANOUT. ADD #1
88. NEW 4" SCHEDULE 40 PIPE, 7 L.F. @ 2% MIN. SLOPE FOR SHUTDOWN PIT. PROVIDE GRATE ON TOP OF PIPE. ADD #1
89. NEW 24" DIA. PRECAST CONCRETE INLET WITH SOLID LID.
90. NEW 8" PVC SDR 26, 67 LF @ 1.04% SLOPE.
91. NEW 24" DIA. PRECAST CONCRETE INLET WITH SOLID LID.
92. NEW 8"x8" WYE CONNECTION.
93. NEW 8" PVC SDR 26, 29 LF @ 1% MIN. SLOPE. CONNECT UPSTREAM END TO NEW SPLASHPAD DRAIN.
94. NEW 8"x8" WYE CONNECTION.
95. NEW 8" PVC SDR 26, 25 LF @ 1% MIN. SLOPE. CONNECT UPSTREAM END TO NEW SPLASHPAD DRAIN.
96. NEW 8" PVC SDR 26, 45 L.F. @ 1% SLOPE CONNECT TO SPLASH PAD DRAIN.

SANITARY

1. EXISTING SANITARY SEWER TO REMAIN.
2. EXISTING SANITARY STRUCTURE TO REMAIN.
3. CONNECT NEW SANITARY SEWER TO EXISTING SANITARY SEWER MANHOLE WITH EXTERIOR DROP CONNECTION. CONTRACTOR TO USE FLEXIBLE RUBBER BOOT THAT MEETS ASTM C423 WHERE PROPOSED SANITARY SEWER CONNECTS TO EXISTING MANHOLE.
4. NEW 6" PVC SDR 26, 27 L.F. @ 2.04% SLOPE.
5. NEW 48" DIA. PRECAST CONCRETE MANHOLE
6. NEW 6" PVC SDR 26, 75 L.F. @ 1.53% SLOPE.
7. NEW 48" DIA. PRECAST CONCRETE MANHOLE.
8. NEW 6" PVC C900, 56 L.F. @ 1.43% SLOPE.
9. NEW 48" DIA. PRECAST CONCRETE MANHOLE.
10. NEW 6" PVC SDR 26, 95 L.F. @ 1.14% SLOPE
11. CONNECT NEW SANITARY TO BUILDING (SEE PLUMBING DETAILS FOR CONTINUATION).

OTHER UTILITY

1. EXISTING ELECTRIC METER TO REMAIN.
2. EXISTING TRANSFORMER TO REMAIN.
3. EXISTING GENERATOR TO REMAIN.
4. EXISTING STREET LIGHT TO REMAIN.
5. EXISTING LIGHT TO REMAIN.
6. EXISTING TELCO PEDESTAL TO REMAIN. ADD #1
7. NEW SPLASH PAD EQUIPMENT TO BE PROVIDED BY THE OWNER AND INSTALLED BY THE CONTRACTOR. SEE SPLASH PAD PLANS, PREPARED BY VORTEX AQUATIC STRUCTURES INTERNATIONAL, FOR EQUIPMENT LAYOUT AND INSTALLATION SPECIFICATIONS. SEE MEP PLANS FOR WATER AND SEWER PIPING TO AND FROM SPLASH PAD.
8. NEW TRANSFORMER. (SEE MEP PLANS FOR DETAILS)

WATER

GENERAL WATER NOTES:
- ALL FITTINGS SHALL HAVE MECHANICAL JOINTS RESTRAINED BY MEGALUG GLANDS.
- CONTRACTOR SHALL COORDINATE WATER TAPS WITH THE VILLAGE PUBLIC WORKS DEPARTMENT PRIOR THE CONSTRUCTION.

1. EXISTING 16" WATER MAIN TO REMAIN.
2. EXISTING VALVE VAULT TO REMAIN.
3. EXISTING FIRE HYDRANT TO REMAIN.
4. EXISTING B-BOX TO REMAIN.
5. CONNECT NEW WATER SERVICE TO EXISTING WATER MAIN VIA PRESSURE CONNECTION WITH STAINLESS STEEL TAPPING SLEEVE PER VILLAGE REQUIREMENTS.
6. NEW 4" DIA. DIP CL52 WATER SERVICE, 231 L.F. (SEE PLUMBING PLANS FOR CONTINUATION).
7. NEW 12" DIAMETER STEEL CASING PIPE TO BE DIRECTIONALLY DRILLED/BORED/AUGURED AND PUSHED UNDERNEATH FREEMAN ROAD, 93 L.F.
8. NEW 60" DIA. PRECAST CONCRETE VALVE VAULT.
9. NEW 11.25 DEGREE DIP CL52 ELBOW.
10. NEW 45 DEGREE DIP CL52 ELBOW.

EXISTING UTILITY DATA

8 — RIM=847.56' (STORM #8)
60" CONCRETE STRUCTURE
INV=828.56' (36" RCP W)
INV=830.67' (36" RCP ENE)
INV=830.78' (24" RCP SSE)

9 — RIM=851.01' (STORM #9)
60" CONCRETE STRUCTURE
INV=832.68' (36" RCP SW)
INV=832.48' (36" RCP E)

10 — RIM=842.63' (SANITARY #10)
48" CONCRETE STRUCTURE
INV=835.12' (8" METAL NNW)
INV=835.12' (10" PVC E)

11 — RIM=845.96' (SANITARY #11)
48" CONCRETE STRUCTURE
INV=837.60' (8" METAL WNW/SSE)

13 — RIM=843.71' (SANITARY #13)
48" CONCRETE STRCUTURE
INV=833.91' (8" CLAY W/E)

HATCH LEGEND

- NEW 5" CONCRETE SIDEWALK
  5" PORTLAND CEMENT CONCRETE
  4" CA-6 BASE COURSE
- NEW 6" CONCRETE PAVEMENT
  6" PORTLAND CEMENT CONCRETE
  4" CA-6 BASE COURSE
- NEW CONCRETE SPLASH PAD

AQUATIC \ CIVIL \ MECHANICAL \ ELECTRICAL \ PLUMBING \ TELECOMMUNICATION \ STRUCTURAL \ ACCESSIBILITY CONSULTING \ DESIGN & PROGRAM MANAGEMENT \ LAND SURVEY

WT GROUP
Engineering with Precision, Place and Passion.
2675 Pratum Avenue | Hoffman Estates, IL 60192
T: 224.293.0303 F: 224.293.0444
wtengineering.com
IL License No: 184.007570-0015 Expires: 04.30.2021

© COPYRIGHT 2019 THE W-T GROUP, LLC

WT Group
Engineering • Design • Consulting

SOUTH RIDGE COMMUNITY PARK
ENHANCEMENT PLAN 2019
1450 FREEMAN ROAD
HOFFMAN ESTATES, IL 60192

heparks
making life fun

ISSUE

TO	DATE
MWRD	9/17/19
MWRD	10/22/19
VILLAGE	11/25/19
MWRD	1/2/20
SWCD	1/17/20
FOR BID	1/23/20
ADD #1	2/03/20

CHECK: CMS

DRAWN: PS

1911354C

C-6.4
SITE UTILITY PLAN

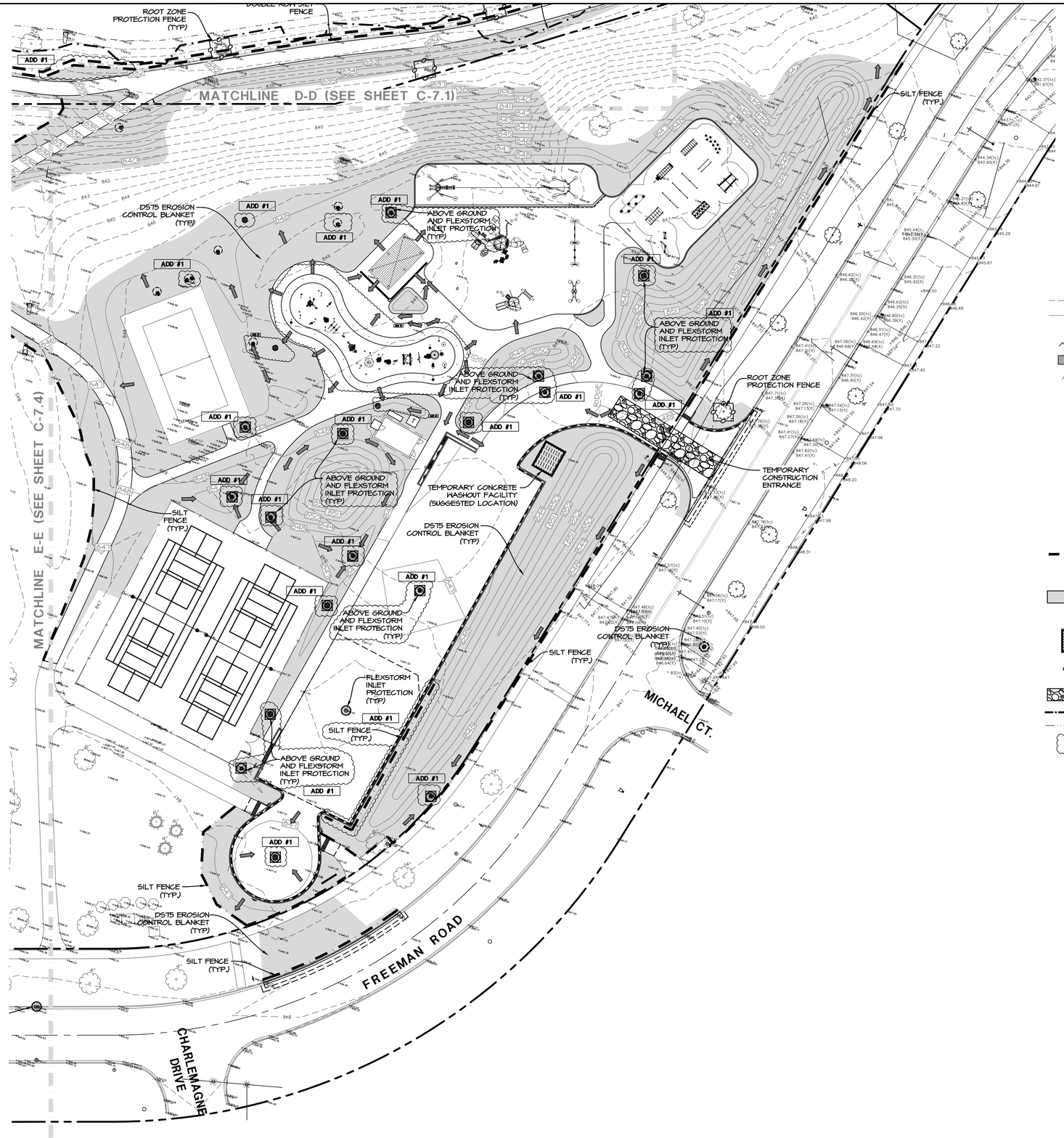

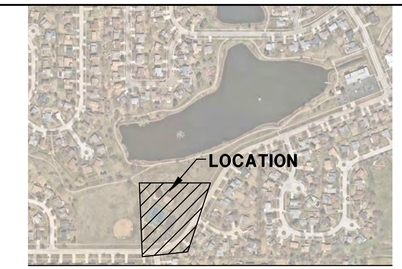

KEYMAP

SCALE: N.T.S.

NORTH

SWPPP LEGEND

- EXISTING SPOT GRADE
- EXISTING CONTOUR LINE
- PROPOSED CONTOUR LINE
- OVERLAND FLOW ARROW
- 100 YEAR OVERLAND FLOW ROUTE
- EMERGENCY OVERFLOW ARROW
- ADJUST — ADJUST EXISTING RIM ELEVATION
- EXISTING MANHOLE
- EXISTING WATER STRUCTURE
- EXISTING FIRE HYDRANT
- EXISTING B-BOX
- EXISTING FLARED END SECTION
- PROPOSED FIRE HYDRANT
- PROPOSED VALVE WITH VAULT
- PROPOSED B-BOX
- PROPOSED INLET
- PROPOSED CATCH BASIN
- PROPOSED CLOSED LID MANHOLE
- SILT FENCE
- FLEXSTORM CATCH-IT INLET PROTECTION
- FINE GRADE, FERTILIZE, AND SEED. INSTALL DS75 EROSION CONTROL BLANKET WITH 6" BIO-STAKES AS MANUFACTURED BY NORTH AMERICAN GREEN. FOLLOW MANUFACTURER'S INSTALLATION INSTRUCTIONS. SEE SWPPP NOTES J AND K.
- TEMPORARY CONCRETE WASHOUT FACILITY
- ROOT ZONE PROTECTION FENCE
- TEMPORARY CONSTRUCTION ENTRANCE
- WETLAND BOUNDARY
- NORMAL WATER LEVEL
- ADD #1 — ABOVE GROUND INLET PROTECTION – MONOFILAMENT FABRIC BARRIER FENCE

SWPPP NOTES:

A. ALL DISTURBED GREEN SPACES ON THE SITE SHALL BE RESTORED ACCORDING TO THE SEED BED PREPARATION SPECIFICATIONS BELOW AND BLANKETED OR MATTED AS SHOWN ON THE PLANS.

B. TEMPORARY OR PERMANENT STABILIZATION SHALL OCCUR IMMEDIATELY WHENEVER EARTH DISTURBING ACTIVITIES HAVE PERMANENTLY OR TEMPORARILY CEASED ON ANY PORTION OF THE SITE. TEMPORARY STABILIZATION SHALL CONSIST OF THE INSTALLATION OF TEMPORARY SEEDING.

C. CONTRACTOR TO INSTALL TEMPORARY CONSTRUCTION ENTRANCES AS NECESSARY TO EXCAVATE AREAS AND HAUL SOILS ON-SITE. TRACKING OF DEBRIS ON SITE WILL NOT BE TOLERATED. ANY DEBRIS LEFT OUTSIDE OF THE PROJECT LIMITS MUST BE CLEANED IMMEDIATELY.

D. EROSION CONTROL BLANKETS AND TURF REINFORCEMENT MATS SHALL BE INSTALLED USING 6" BIO-STAKES AS MANUFACTURED BY NORTH AMERICAN GREEN. METAL STAKES AND STAPLES ARE PROHIBITED.

E. CONTRACTOR SHALL PROVIDE ALL NECESSARY MAINTENANCE FOR THE SEDIMENT AND EROSION CONTROL MEASURES FOR THE DURATION OF THE PROJECT.

F. CONTRACTOR SHALL BE RESPONSIBLE FOR PROVIDING ALL STORMWATER POLLUTION PREVENTION PLAN (SWPPP) INSPECTIONS, INSPECTION REPORTS, CORRECTIVE ACTION FORMS, SWPPP AMENDMENT LOGS, SUBCONTRACTOR CERTIFICATIONS/AGREEMENTS, GRADING AND STABILIZATION ACTIVITIES LOGS, SWPPP TRAINING LOGS, AND DELEGATION OF AUTHORITY FORMS FOR THE DURATION OF THE PROJECT.

G. CONTRACTOR SHALL PROVIDE COPIES OF ALL SWPPP REPORTS, FORMS, AND LOGS TO W-T CIVIL ENGINEERING ONCE THE SITE HAS BEEN STABILIZED. THE CONTRACTOR SHALL MAINTAIN THESE DOCUMENTS FOR A PERIOD OF 3 YEARS FROM THE FINAL STABILIZATION OF THE SITE.

H. FOLLOWING THE REMOVAL OF THE SILT FENCE, THE CONTRACTOR SHALL RESTORE THE THE SILT FENCE TRENCH WITH SOD.

I. SEED BED PREPARATION:

I.A. ALL STONES, ROCKS, DEBRIS LARGER THAN 1" IN DIAMETER SHALL BE REMOVED.

I.B. DISK OR TILL TOPSOIL TO A DEPTH OF 3" AND REDUCE ALL SOIL PARTICLES TO NO LARGER THAN 1". THE SURFACE SHALL BE FREE OF WEEDS, STONES, ROCKS, STICKS, GULLIES, CLODS, AND DEBRIS.

I.C. THE AREA SHALL BE FINE GRADED.

I.D. THE SEED SHALL BE PLACED INTO THE SOIL WITH A MACHINE THAT MECHANICALLY PLACES THE SEED IN DIRECT CONTACT WITH THE SOIL AND COVERS THE SEED WITH THE SOIL.

I.E. BROADCAST AND HYDROSEED WILL NOT BE ALLOWED.

I.F. SEEDED AREAS SHALL BE COVERED WITH THE EROSION BLANKET RIGHT AFTER THE SEED HAS BEEN SOWN.

I.G. ANY SOIL AMENDMENTS NEEDED TO ACHIEVE A 90% HEALTHY STAND OF VEGETATION WILL BE ADDED TO THE SOIL AT NO EXTRA CHARGE TO THE OWNER. THE STAND OF VEGETATION WILL NEED TO BE ACCEPTED BY THE ENGINEER.

I.H. THE SEED MIX SHALL BE KENTUCKY BLUEGRASS 100LBS/ACRE, REVENGE PERENNIAL RYEGRASS 60 LBS/ACRE, ANNUAL RYE 40 LBS/ACRE AND CREEPING RED FESCUE 40 LBS/ACRE TOTAL.

J. CONTRACTOR TO INSTALL TEMPORARY SEEDING AND EROSION CONTROL BLANKETS AS NECESSARY TO STABILIZE DISTURBED AREAS AND SOIL STOCKPILES. OWNER TO INSTALL FINAL SEEDING, BLANKETS AND LANDSCAPING WITHIN THREE DAYS OF FINAL DISTURBANCE.

K. CONTRACTOR SHALL PROVIDE A MINIMUM OF 6" TOPSOIL IN DISTURBED AND PROPOSED LAWN/LANDSCAPE AREAS. SEE SWPPP NOTE "I" FOR TOPSOIL PREPARATION.

NORTH

1" = 30'

00 15 30 60 120

AQUATIC \ CIVIL \ MECHANICAL \ ELECTRICAL \ PLUMBING \ TELECOMMUNICATION \ STRUCTURAL \ ACCESSIBILITY CONSULTING \ DESIGN & PROGRAM MANAGEMENT \ LAND SURVEY

WT GROUP
Engineering with Precision. Pace and Passion.
2675 Pratum Avenue | Hoffman Estates, IL 60192
T: 847.695.9700 F: 847.695.9701 P: 224.293.0444
wtengineering.com
IL License No: 184.007570-0015 Expires: 04.30.2021

© COPYRIGHT 2019 THE W-T GROUP, LLC

WT Group
Engineering • Design • Consulting

SOUTH RIDGE COMMUNITY PARK
ENHANCEMENT PLAN 2019
1450 FREEMAN ROAD
HOFFMAN ESTATES, IL 60192

heparks
making life fun.

ISSUE

TO	DATE
MWRD	9/17/19
MWRD	10/22/19
VILLAGE	11/25/19
MWRD	1/2/20
SWCD	1/17/20
FOR BID	1/23/20
ADD #1	2/03/20

CHECK: CMS

DRAWN: PS

1911354C

C-7.0

STORMWATER POLLUTION PREVENTION PLAN

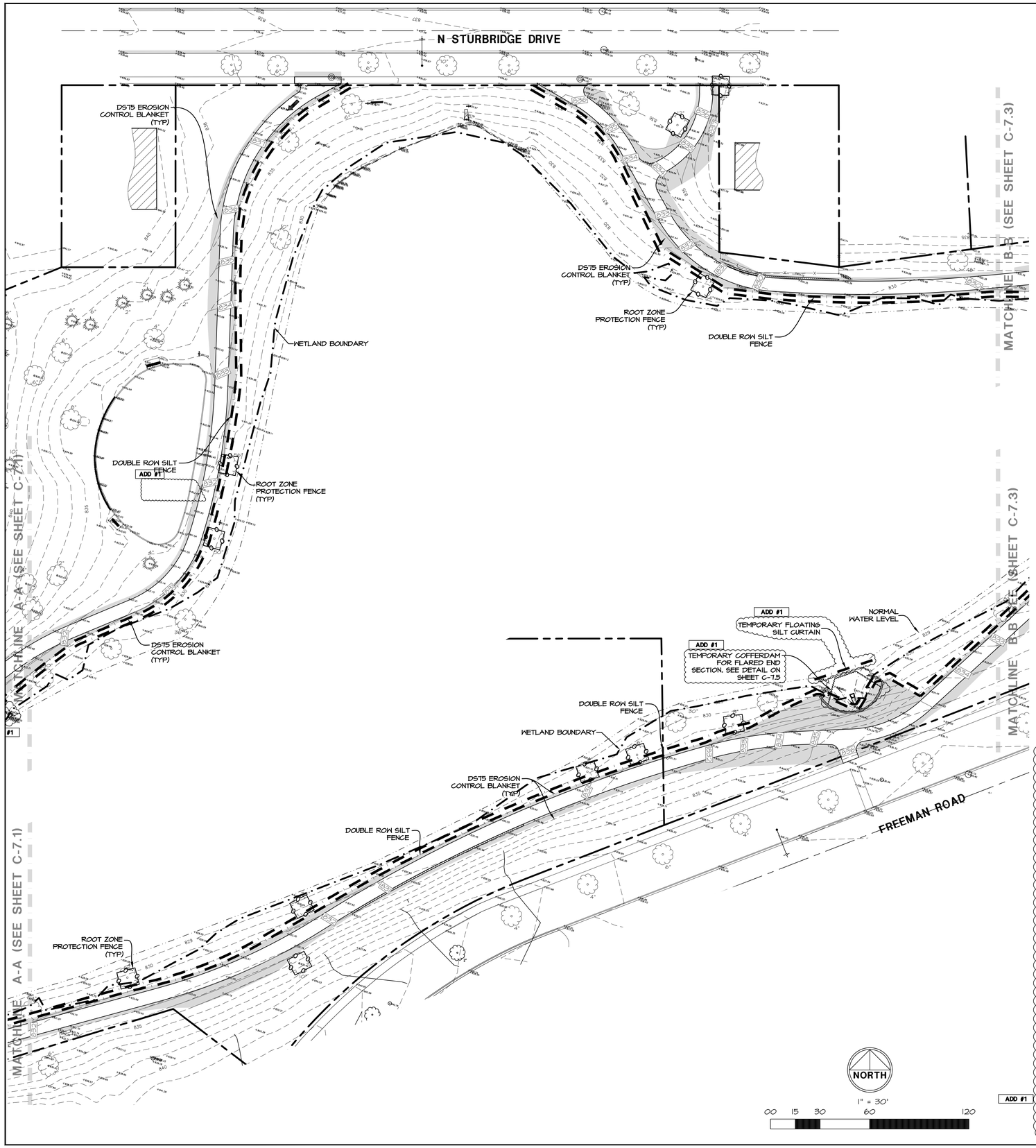

KEYMAP

SCALE: N.T.S.

NORTH

SWPPP LEGEND

- EXISTING SPOT GRADE
- EXISTING CONTOUR LINE
- PROPOSED CONTOUR LINE
- OVERLAND FLOW ARROW
- 100 YEAR OVERLAND FLOW ROUTE
- EMERGENCY OVERFLOW ARROW
- ADJUST EXISTING RIM ELEVATION
- EXISTING MANHOLE
- EXISTING WATER STRUCTURE
- EXISTING FIRE HYDRANT
- EXISTING B-BOX
- EXISTING FLARED END SECTION
- PROPOSED FIRE HYDRANT
- PROPOSED VALVE WITH VAULT
- PROPOSED B-BOX
- PROPOSED INLET
- PROPOSED CATCH BASIN
- PROPOSED CLOSED LID MANHOLE
- SILT FENCE
- FLEXSTORM CATCH-IT INLET PROTECTION
- FINE GRADE, FERTILIZE, AND SEED. INSTALL DS75 EROSION CONTROL BLANKET WITH 6" BIO-STAKES AS MANUFACTURED BY NORTH AMERICAN GREEN. FOLLOW MANUFACTURER'S INSTALLATION INSTRUCTIONS. SEE SWPPP NOTES J AND K.
- TEMPORARY CONCRETE WASHOUT FACILITY
- ROOT ZONE PROTECTION FENCE
- TEMPORARY CONSTRUCTION ENTRANCE
- WETLAND BOUNDARY
- NORMAL WATER LEVEL ADD #1
- ABOVE GROUND INLET PROTECTION - MONOFILAMENT FABRIC BARRIER FENCE

SWPPP NOTES:

A. ALL DISTURBED GREEN SPACES ON THE SITE SHALL BE RESTORED ACCORDING TO THE SEED BED PREPARATION SPECIFICATIONS BELOW AND BLANKETED OR MATTED AS SHOWN ON THE PLANS.
B. TEMPORARY OR PERMANENT STABILIZATION SHALL OCCUR IMMEDIATELY WHENEVER EARTH DISTURBING ACTIVITIES HAVE PERMANENTLY OR TEMPORARILY CEASED ON ANY PORTION OF THE SITE. TEMPORARY STABILIZATION SHALL CONSIST OF THE INSTALLATION OF TEMPORARY SEEDING.
C. CONTRACTOR TO INSTALL TEMPORARY CONSTRUCTION ENTRANCES AS NECESSARY TO EXCAVATE AREAS AND HAUL SOILS ON-SITE. TRACKING OF DEBRIS ON SITE WILL NOT BE TOLERATED. ANY DEBRIS LEFT OUTSIDE OF THE PROJECT LIMITS MUST BE CLEANED IMMEDIATELY.
D. EROSION CONTROL BLANKETS AND TURF REINFORCEMENT MATS SHALL BE INSTALLED USING 6" BIO-STAKES AS MANUFACTURED BY NORTH AMERICAN GREEN. METAL STAKES AND STAPLES ARE PROHIBITED.
E. CONTRACTOR SHALL PROVIDE ALL NECESSARY MAINTENANCE FOR THE SEDIMENT AND EROSION CONTROL MEASURES FOR THE DURATION OF THE PROJECT.
F. CONTRACTOR SHALL BE RESPONSIBLE FOR PROVIDING ALL STORMWATER POLLUTION PREVENTION PLAN (SWPPP) INSPECTIONS, INSPECTION REPORTS, CORRECTIVE ACTION FORMS, SWPPP AMENDMENT LOGS, SUBCONTRACTOR CERTIFICATIONS/AGREEMENTS, GRADING AND STABILIZATION ACTIVITIES LOGS, SWPPP TRAINING LOGS, AND DELEGATION OF AUTHORITY FORMS FOR THE DURATION OF THE PROJECT.
G. CONTRACTOR SHALL PROVIDE COPIES OF ALL SWPPP REPORTS, FORMS, AND LOGS TO W-T CIVIL ENGINEERING ONCE THE SITE HAS BEEN STABILIZED. THE CONTRACTOR SHALL MAINTAIN THESE DOCUMENTS FOR A PERIOD OF 3 YEARS FROM THE FINAL STABILIZATION OF THE SITE.
H. FOLLOWING THE REMOVAL OF THE SILT FENCE, THE CONTRACTOR SHALL RESTORE THE THE SILT FENCE TRENCH WITH SOD.
I. SEED BED PREPARATION:
   - I.A. ALL STONES, ROCKS, DEBRIS LARGER THAN 1" IN DIAMETER SHALL BE REMOVED.
   - I.B. DISK OR TILL TOPSOIL TO A DEPTH OF 3" AND REDUCE ALL SOIL PARTICLES TO NO LARGER THAN 1". THE SURFACE SHALL BE FREE OF WEEDS, STONES, ROCKS, STICKS, GULLIES, CLODS, AND DEBRIS.
   - I.C. THE AREA SHALL BE FINE GRADED.
   - I.D. THE SEED SHALL BE PLACED INTO THE SOIL WITH A MACHINE THAT MECHANICALLY PLACES THE SEED IN DIRECT CONTACT WITH THE SOIL AND COVERS THE SEED WITH THE SOIL.
   - I.E. BROADCAST AND HYDROSEED WILL NOT BE ALLOWED.
   - I.F. SEEDED AREAS SHALL BE COVERED WITH THE EROSION BLANKET RIGHT AFTER THE SEED HAS BEEN SOWN.
   - I.G. ANY SOIL AMENDMENTS NEEDED TO ACHIEVE A 90% HEALTHY STAND OF VEGETATION WILL BE ADDED TO THE SOIL AT NO EXTRA CHARGE TO THE OWNER. THE STAND OF VEGETATION WILL NEED TO BE ACCEPTED BY THE ENGINEER.
   - I.H. THE SEED MIX SHALL BE KENTUCKY BLUEGRASS 100LBS/ACRE, REVENGE PERENNIAL RYEGRASS 60 LBS/ACRE, ANNUAL RYE 40 LBS/ACRE AND CREEPING RED FESCUE 40 LBS/ACRE TOTAL.
J. CONTRACTOR TO INSTALL TEMPORARY SEEDING AND EROSION CONTROL BLANKETS AS NECESSARY TO STABILIZE DISTURBED AREAS AND SOIL STOCKPILES. OWNER TO INSTALL FINAL SEEDING, BLANKETS AND LANDSCAPING WITHIN THREE DAYS OF FINAL DISTURBANCE.
K. CONTRACTOR SHALL PROVIDE A MINIMUM OF 6" TOPSOIL IN DISTURBED AND PROPOSED LAWN/LANDSCAPE AREAS. SEE SWPPP NOTE "I" FOR TOPSOIL PREPARATION.

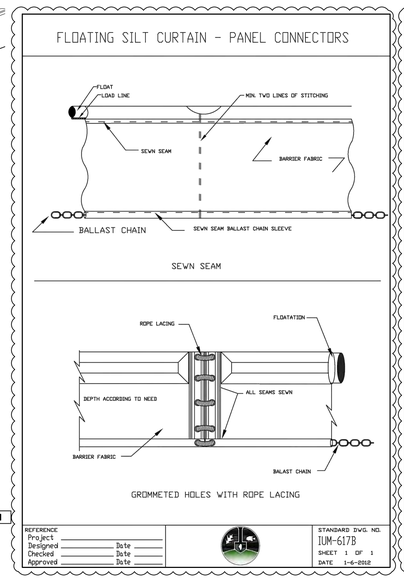

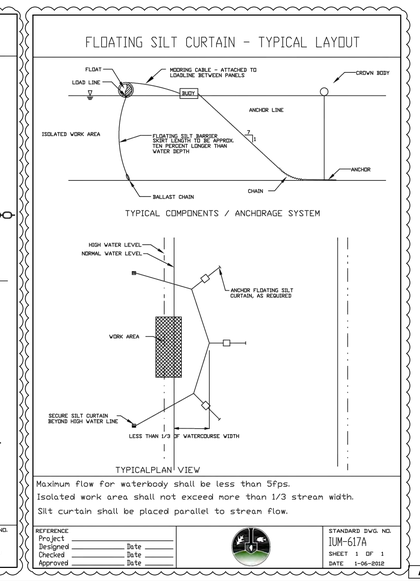

ADD #1

AQUATIC \ CIVIL \ MECHANICAL \ ELECTRICAL \ PLUMBING \ TELECOMMUNICATION \ STRUCTURAL \ ACCESSIBILITY CONSULTING \ DESIGN & PROGRAM MANAGEMENT \ LAND SURVEY

WT GROUP
Engineering with Precision. Pace and Passion.
2675 Pratum Avenue | Hoffman Estates, IL 60192
T: 224.293.0503 F: 224.293.0544
wtengineering.com
IL License No: 184.007570-0015 Expires: 04.30.2021

© COPYRIGHT 2019 THE W-T GROUP, LLC

WT Group
Engineering • Design • Consulting

SOUTH RIDGE COMMUNITY PARK
ENHANCEMENT PLAN 2019
1450 FREEMAN ROAD
HOFFMAN ESTATES, IL 60192

heparks
making life fun

ISSUE

TO	DATE
MWRD	9/17/19
MWRD	10/22/19
VILLAGE	11/25/19
MWRD	1/2/20
SWCD	1/17/20
FOR BID	1/23/20
ADD #1	2/03/20

CHECK: CMS

DRAWN: PS

1911354C

C-7.2
STORMWATER POLLUTION PREVENTION PLAN

TREE PROTECTION FENCING SHALL CONSIST OF WOODEN SNOW FENCE SECURED TO METAL POSTS AT A MAXIMUM OF 8' INTERVALS. EROSION CONTROL FENCING IN CONJUNCTION WITH TREE PROTECTION FENCING MUST NOT BE TRENCHED INTO THE GROUND. AN ALTERNATE VILLAGE APPROVED METHOD MUST BE UTILIZED. AT A MINIMUM, SIGNS WHICH ARE LEGIBLE AT 10 FEET SHALL BE POSTED AND MAINTAINED AT INTERVALS NO LESS THAN 30 FT. WHICH CLEARLY STATE:
"TREE PROTECTION AREA. DO NOT ENTER.
DO NOT MOVE OR ALTER FENCE.
VIOLATION SUBJECT TO FINE OR WORK STOPPAGE."

THE VILLAGE MAY, AT ITS OPTION, INSTALL THE FENCING UTILIZING FUNDS DEPOSITED WITH THE VILLAGE BY THE DEVELOPER FOR THAT PURPOSE. ALL TREE PROTECTION FENCING MUST BE INSTALLED AND MAINTAINED PRIOR TO ANY CONSTRUCTION AS APPROVED BY THE VILLAGE AS PART OF THE APPROVAL PROCESS. IN NO CASE SHALL TREE PROTECTION FENCING BE REMOVED, BREACHED, TEMPORARILY REMOVED, ALTERED, OR RELOCATED WITHOUT WRITTEN AUTHORIZATION FROM THE DEPARTMENT OF COMMUNITY DEVELOPMENT OF THE VILLAGE.

THE REMOVAL, TEMPORARY REMOVAL, ALTERATION OR RELOCATION OF AN INSTALLED TREE PROTECTION FENCE WITHOUT WRITTEN AUTHORIZATION FROM THE DEPARTMENT OF COMMUNITY DEVELOPMENT OF THE VILLAGE SHALL INCUR A PENALTY OF $100.00 PER OCCURRENCE. THE DEVELOPER/BUILDER SHALL BE RESPONSIBLE FOR PAYING THIS PENALTY.

ENTERING A TREE PRESERVATION AREA THAT WAS REQUIRED TO BE FENCED SHALL RESULT IN AN ADDITIONAL PENALTY OF $50 PER DIAMETER INCH FOR ANY TREE THAT IS DAMAGED IN THE OPINION OF THE VILLAGE, INCLUDING, BUT NOT LIMITED TO, GRADING, TRENCHING, LIMB OR BARK REMOVAL, STORAGE OF MATERIALS OR PARKING OF VEHICLES. THE COST OF ANY NECESSARY REMEDIAL TREE CARE ACTION, IN THE OPINION OF THE VILLAGE, SHALL BE THE RESPONSIBILITY OF THE BUILDER/DEVELOPER.

NOTE:

INSTALL & MAINTAIN 4' TALL WOODEN SNOW FENCE SECURED TO METAL POSTS AT A MAXIMUM OF 8' INTERVALS. FENCE TO BE LOCATED AT A DISTANCE FROM TRUNK EQUAL TO 1 FOOT FOR EVERY INCH OF DIAMETER MEASURED AT DBH (DIAMETER AT BREAST HEIGHT, 4.5' FROM GROUND LEVEL), AS SHOWN ON THE APPROVED SITE PLAN.

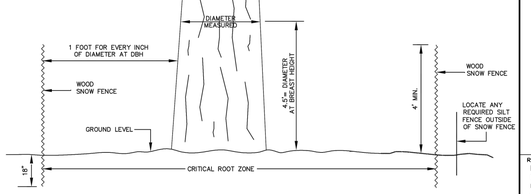

NOTE:

REFER TO THE VILLAGE OF HOFFMAN ESTATES' SUBDIVISION CODE SECTION 10-4-7 FOR FURTHER TREE PRESERVATION STANDARDS.

TREE PROTECTION DETAIL

SCALE	NONE	NO.	REVISIONS	BY	DATE
DATE	5-25-05	1.	MISC UPDATES	SW	2/10
DRAFTER	SLW				
VILLAGE OF HOFFMAN ESTATES		FILE NAME:		SHEET NO.	
TRANSPORTATION & ENGINEERING DIVISION		TREEPROT.DWG		1 OF 1	

STABILIZED CONSTRUCTION ENTRANCE PLAN

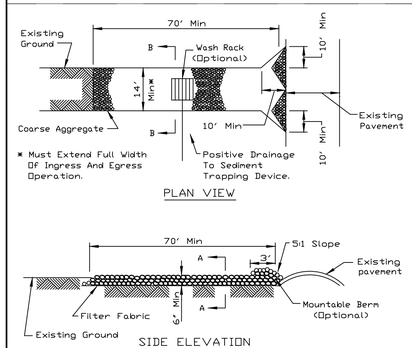

NOTES:
1. Filter fabric shall meet the requirements of material specification 592 GEOTEXTILE, Table I or 2, Class I, II or IV and shall be placed over the cleared area prior to the placing of rock.
2. Rock or reclaimed concrete shall meet one of the following IDOT coarse aggregate gradation, CA-1, CA-2, CA-3 or CA-4 and be placed according to construction specification 25 ROCKFILL using placement Method 1 and Class III compaction.
3. Any drainage facilities required because of washing shall be constructed according to manufacturers specifications.
4. If wash racks are used they shall be installed according to the manufactures specifications.

REFERENCE			U.S. DEPARTMENT OF AGRICULTURE SOIL CONSERVATION SERVICE ILLINOIS	STANDARD DWG. NO. IL-630 SHEET 1 OF 2 DATE 8-18-94
Project				
Designed	Date			
Checked	Date			
Approved	Date			

STABILIZED CONSTRUCTION ENTRANCE PLAN

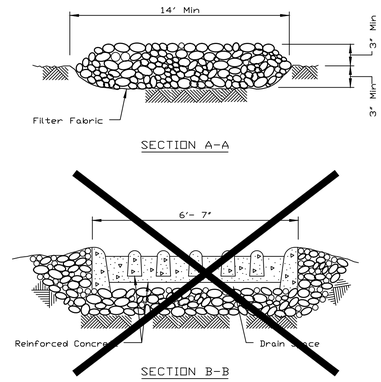

IF AN AGGREGATE CONSTRUCTION ENTRANCE IS CHOSEN BY THE CLIENT, CONTRACTOR IS TO MAINTAIN ENTRANCE AND ENSURE THAT SOILS ARE NOT TRACKED OFF SITE BY CONSTRUCTION VEHICLES.

REFERENCE			U.S. DEPARTMENT OF AGRICULTURE SOIL CONSERVATION SERVICE ILLINOIS	STANDARD DWG. NO. IL-630 SHEET 2 OF 2 DATE 8-18-94
Project				
Designed	Date			
Checked	Date			
Approved	Date			

DETAIL - STABILIZED CONSTRUCTION ENTRANCE

NOT TO SCALE

SILT FENCE PLAN

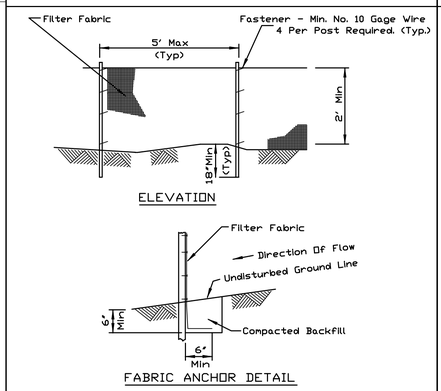

NOTES:
1. Temporary sediment fence shall be installed prior to any grading work in the area to be protected. They shall be maintained throughout the construction period and removed in conjunction with the final grading and site stabilization.
2. Filter fabric shall meet the requirements of material specification 592 Geotextile Table 1 or 2, Class I with equivalent opening size of at least 30 for nonwoven and 40 for woven.
3. Fence posts shall be either standard steel post or wood post with a minimun cross-sectional area of 3.0 sq. in.

REFERENCE			STANDARD DWG. NO. IUM-620A SHEET 1 OF 2 DATE 3-16-12
Project			
Designed	Date		
Checked	Date		
Approved	Date		

SILT FENCE - SPLICING TWO FENCES

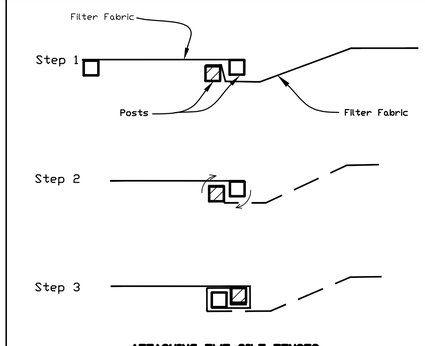

ATTACHING TWO SILT FENCES

1. Place the end post of the second fence inside the end post of the first fence.
2. Rotate both posts at least 180 degrees in a clockwise direction to create a tight seal with the fabric material.
3. Cut the fabric near the bottom of the stakes to accommodate the 6" flap.
4. Drive both posts a minimum of 18 inches into the ground and bury the flap.
5. Compact backfill (particularly at splices) completely to prevent stormwater piping.

REFERENCE			STANDARD DWG. NO. IUM-620B(W) SHEET 1 OF 1 DATE 2-06-2012
Project			
Designed	Date		
Checked	Date		
Approved	Date		

DETAIL - SILT FENCE

NOT TO SCALE

BLADDER PARTIAL COFFERDAM

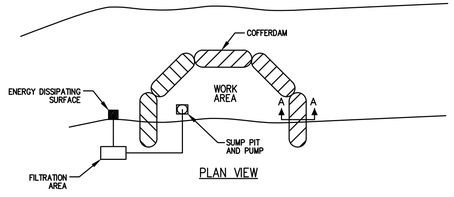

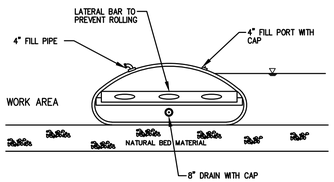

COFFERDAM PROFILE

NOTES:
1. ALL DISCHARGES SHOULD BE ON ENERGY DISSIPATING SURFACES.

2. LOCATIONS FOR SUMP PIT, FILTRATION AREA, AND ENERGY DISSIPATING SURFACES MAY VARY DEPENDING ON SITE CONDITIONS.

REFERENCE			STANDARD DWG. NO. IUM-503BP SHEET 4 OF 7 DATE 07-09-2012
Project			
Designed	Date		
Checked	Date		
Approved	Date		

ADD #1

INLET PROTECTION -MONOFILAMENT FABRIC BARRIER FENCE

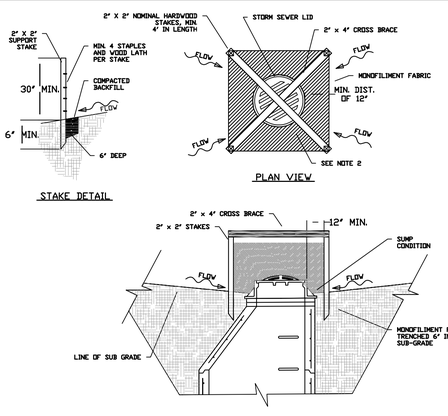

NOTES:
1. 2 x 2 nominal hardwood stakes, 4 foot minimum length, driven into ground approximately 18 inches, stakes driven a minimum width of 12 inches away from the drop inlet.

2. Area inside the fence, from edge of fabric to structure, must be stabilized with Erosion Control Blanket, Turf Reinforcement Mat, Geotextile 592 Table 2 Class 2 or CA-7 stone

3. Maximum height of the fabric above the crest of the drop inlet shall be 30". Place the bottom 6 inches of the fabric in a trench and backfill with 6 inches of 95% compacted soil.

4. Stakes must be a maximum of 4 feet apart.

5. A maintenance schedule must maintain a sediment accumulation of less than 50% of the height of the monofilment fabric.

6. Monofilment fabric shall meet the requirement of Material Specification 592 Geotextile Table 1, Class 4.

7. Monofilment fabric shall be secured to each 2" X 2" nominal hardwood stake with a minimum of 4 steel staple fasteners and wood lath. Wood lath shall be a minimum length of 10 inches. Wire fasteners should be used if metal T-Posts are installed in place of hardwood stakes.

REFERENCE			STANDARD DWG. NO. IUM-531 SHEET 1 OF 1 DATE 04-6-15
Project			
Designed	Date		
Checked	Date		
Approved	Date		

ADD #1

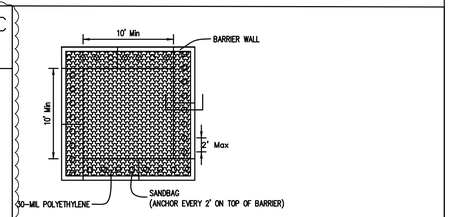

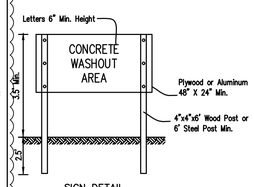

NOTES:

1. Maintaining temporary concrete washout facilities shall include removing and disposing of hardend concrete and/or slurry and returning the facilities to a functional condition.

2. Facility shall be cleaned or reconstructed in a new area once washout becomes two-thirds full.

A.P.W.		TEMPORARY CONCRETE WASHOUT FACILITY – BARRIER WALL	Date: 1/08 Designed: Drawn: G. JOHNSON Reviewed: Approved:

CONCRETE WASHOUT FACILITY

NOT TO SCALE

NORTH AMERICAN GREEN

SLOPE INSTALLATION
APLICACIONES PARA TALUDES

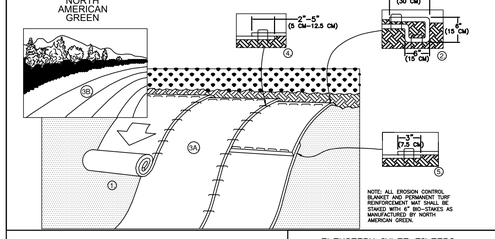

1. PREPARE SOIL BEFORE INSTALLING BLANKETS, INCLUDING ANY NECESSARY APPLICATION OF LIME, FERTILIZER, AND SEED. NOTE: WHEN USING CELL-O-SEED DO NOT SEED PREPARED AREA. CELL-O-SEED MUST BE INSTALLED WITH PAPER SIDE DOWN.

2. BEGIN AT THE TOP OF THE SLOPE BY ANCHORING THE BLANKET IN A 6" (15 CM) DEEP X 6" (15 CM) WIDE TRENCH WITH APPROXIMATELY 12" (30cm) OF BLANKET EXTENDED BEYOND THE UP-SLOPE PORTION OF THE TRENCH. ANCHOR THE BLANKET WITH A ROW OF STAPLES/STAKES APPROXIMATELY 12" (30 CM) APART IN THE BOTTOM OF THE TRENCH. BACKFILL AND COMPACT THE TRENCH AFTER STAPLING. APPLY SEED TO COMPACTED SOIL AND FOLD REMAINING 12" (30 CM) PORTION OF BLANKET BACK OVER SEED AND COMPACTED SOIL. SECURE BLANKET OVER COMPACTED SOIL WITH A ROW OF STAPLES/STAKES SPACED APPROXIMATELY 12" (30 CM) APART ACROSS THE WIDTH OF THE BLANKET.

3. ROLL THE BLANKETS (A.) DOWN OR (B.) HORIZONTALLY ACROSS THE SLOPE. BLANKETS WILL UNROLL WITH APPROPRIATE SIDE AGAINST THE SOIL SURFACE. ALL BLANKETS MUST BE SECURELY FASTENED TO SOIL SURFACE BY PLACING STAPLES/STAKES IN APPROPRIATE LOCATIONS AS SHOWN IN THE STAPLE PATTERN GUIDE. WHEN USING THE DOT SYSTEM , STAPLES/STAKES SHOULD BE PLACED THROUGH EACH OF THE COLORED DOTS CORRESPONDING TO THE APPROPRIATE STAPLE PATTERN.

4. THE EDGES OF PARALLEL BLANKETS MUST BE STAPLED WITH APPROXIMATELY 2" – 5" (5 CM – 12.5 CM) OVERLAP DEPENDING ON BLANKET TYPE.

5. CONSECUTIVE BLANKETS SPLICED DOWN THE SLOPE MUST BE PLACED END OVER END (SHINGLE STYLE) WITH AN APPROXIMATE 3" (7.5 CM) OVERLAP. STAPLE THROUGH OVERLAPPED AREA. APPROXIMATELY 12" (30 CM) APART ACROSS ENTIRE BLANKET WIDTH.

NOTE: *IN LOOSE SOIL CONDITIONS, THE USE OF STAPLE OR STAKE LENGTHS GREATER THAN 6" (15 CM) MAY BE NECESSARY TO PROPERLY SECURE THE BLANKETS.

FLEXSTORM INLET FILTERS PRODUCT SELECTION AND SPECIFICATION DRAWING

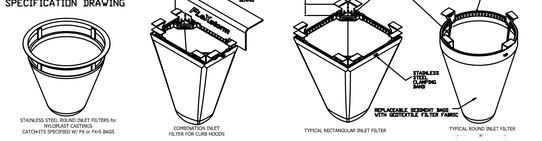

1. INDENTITY YOUR FRAME STYLE, SIZE, AND MATERIAL

STYLE	FRAME STYLE AND SIZE	Frame P/N
ROUND	Small Round (up to 20.0" dia grates (AJ dim)	62ARD
	Med Round (20.1" - 26.0" dia grates (AL) up to 25" dia openings (BJ))	62MRD
	Large Round (26.1" - 32.0" dia grates (AL) up to 30" openings (BJ))	62LRD
	XL Round (32.1" dia - 39" dia grates (AL) up to 37" dia openings (BJ))	62XLRD
BOX / SQUARE	Small Rect / Square (up to 39" (B) x 59" (D) openings or 84" perimeter)	62SSQ
	Med Rect / Square (up to 24" (B) x 36" (D) openings or 96" perimeter)	62MSQ
	Large Rect / Square (up to 36" (B) x 36" (D) openings or 130" perimeter)	62LSQ
	XL Rect / Square (side by side 2 grates fitted up to 48" (B) x 30" (D) openings)	62XLSQ
CURB / EDGE	Small Rect / Square (ref Rect sizing; shipped with Magnetic Curb Flaps)	62SCB
	Med Rect / Square (ref Rect sizing; shipped with Magnetic Curb Flaps)	62MCB
	Large Rect / Square (ref Rect sizing; shipped with Magnetic Curb Flaps)	62LCB
	XL Rect / Square (ref Rect sizing; shipped with Magnetic Curb Flaps)	62XLCB
TYPICAL/ PLAST	12" diameter Nyloplast castings (Stainless Steel Framing standard)	6212NY
	15" diameter Nyloplast castings (Stainless Steel Framing standard)	6215NY
	18"diameter Nyloplast castings (Stainless Steel Framing standard)	6218NY
	24" diameter Nyloplast castings (Stainless Steel Framing standard)	6224NY
	30" diameter Nyloplast castings (Stainless Steel Framing standard)	6230NY
WALL MOUNT	Open Throat Gutters - Curb Opening Size	
	Up to 4' (1 Filter and Mounting Hardware)	62NWM
	Between 4' and 8' (2 Filters and Mounting Hardware)	62NWM
	Between 8' and 12' (3 Filters and Mounting Hardware)	62NWM
	Between 12' and 16' (4 Filters and Mounting Hardware)	62NWM
UPGRADED FRAMING MATERIAL OPTIONS (STANDARD IS ZINC PLATED)		SUFFIX
CHROME PLATED FRAMING FOR HIGH SALT EXPOSURE		-CHR
STAINLESS STEEL FRAMING FOR HIGH SALT AND CHEMICAL EXPOSURE		-SS

2. SELECT YOUR FILTER BAG PART NUMBER

FLEXSTORM FILTER BAGS	(23" depth) 3/10 Bag P/N	(12" depth) Short Bag P/N	Clean Water Flow Rate (GPM/SqFt)	Min A.O.S. (US Sieve)
FK: Standard Woven Bag	FK	FK-S	200	40
FKP: Woven w/ MyCelx	FKP	FKP-S	200	40
FKO: Woven w/ Oil Boom	FKO	FKO-S	200	40
PC: Post Construction Bag	PC	PC-S	157	140
PCP: PC Bag w/ MyCelx	PCP	PCP-S	157	140
LL: Litter and Leaf Bag	LL	LL-S	High	3.5
IL: IDOT Non-Woven Bag	IL	IL-S	145	70

3. CREATE YOUR FLEXSTORM INLET FILTER PART NUMBER

			-	
Frame P/N from Step 1.	Filter Bag P/N from Step 2.	Framing Material		

INSTALLATION:
1. REMOVE GRATE
2. DROP FLEXSTORM INLET FILTER ONTO LOAD BEARING LIP OF CASTING OR CONCRETE STRUCTURE
3. REPLACE GRATE

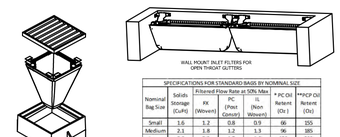

SPECIFICATIONS FOR STANDARD BAGS BY NOMINAL SIZE

Nominal Bag Size	Solids Storage (CuFt)	Filtered Flow Rate at 50% Max			* PC Oil Retent (Ozs)	**PCP Oil Retent (Ozs)
		FK (Woven)	PC (Post Const.)	IL (Non Woven)		
Small	1.6	1.2	0.8	0.9	66	155
Medium	2.1	1.8	1.2	1.1	96	185
Large	3.8	2.2	1.5	1.6	120	209
XL	4.2	3.6	2.4	2.6	192	370

* PC Filter bag at 50% max adsorption capacity.
** PC Filter bag at 50% capacity and MyCelx skimmer at 300% capacity.

ALL PRODUCTS MANUFACTURED BY INLET & PIPE PROTECTION, INC DISTRIBUTED BY ADS
WWW.INLETFILTERS.COM
(866) 283-3635 PH
(800) 968-7277 FAX
INFO@INLETFILTERS.COM

REV		IPP Flexstorm Specification	REV
DATE		SHEET 1 OF 1	

DETAIL - FLEXSTORM INLET PROTECTION

AQUATIC \ CIVIL \ MECHANICAL \ ELECTRICAL \ PLUMBING \ TELECOMMUNICATION \ STRUCTURAL \ ACCESSIBILITY CONSULTING \ DESIGN & PROGRAM MANAGEMENT \ LAND SURVEY

WT GROUP
Engineering with Precision, Place and Passion.
2075 Pratum Avenue | Hoffman Estates, IL 60192
T: 224.293.0300 F: 224.293.0444
wtengineering.com
IL License No: 184.007570-0015 Expires 04.30.2021

© COPYRIGHT 2019 THE W-T GROUP, LLC

WT Group
Engineering • Design • Consulting

SOUTH RIDGE COMMUNITY PARK
ENHANCEMENT PLAN 2019
1450 FREEMAN ROAD
HOFFMAN ESTATES, IL 60192

heparks
making life fun

ISSUE TO	DATE
MWRD	9/17/19
MWRD	10/22/19
VILLAGE	11/25/19
MWRD	1/2/20
SWCD	1/17/20
FOR BID	1/23/20
ADD #1	2/03/20

CHECK: CMS

DRAWN: PS

1911354C

C-7.5
STORMWATER POLLUTION PREVENTION DETAILS

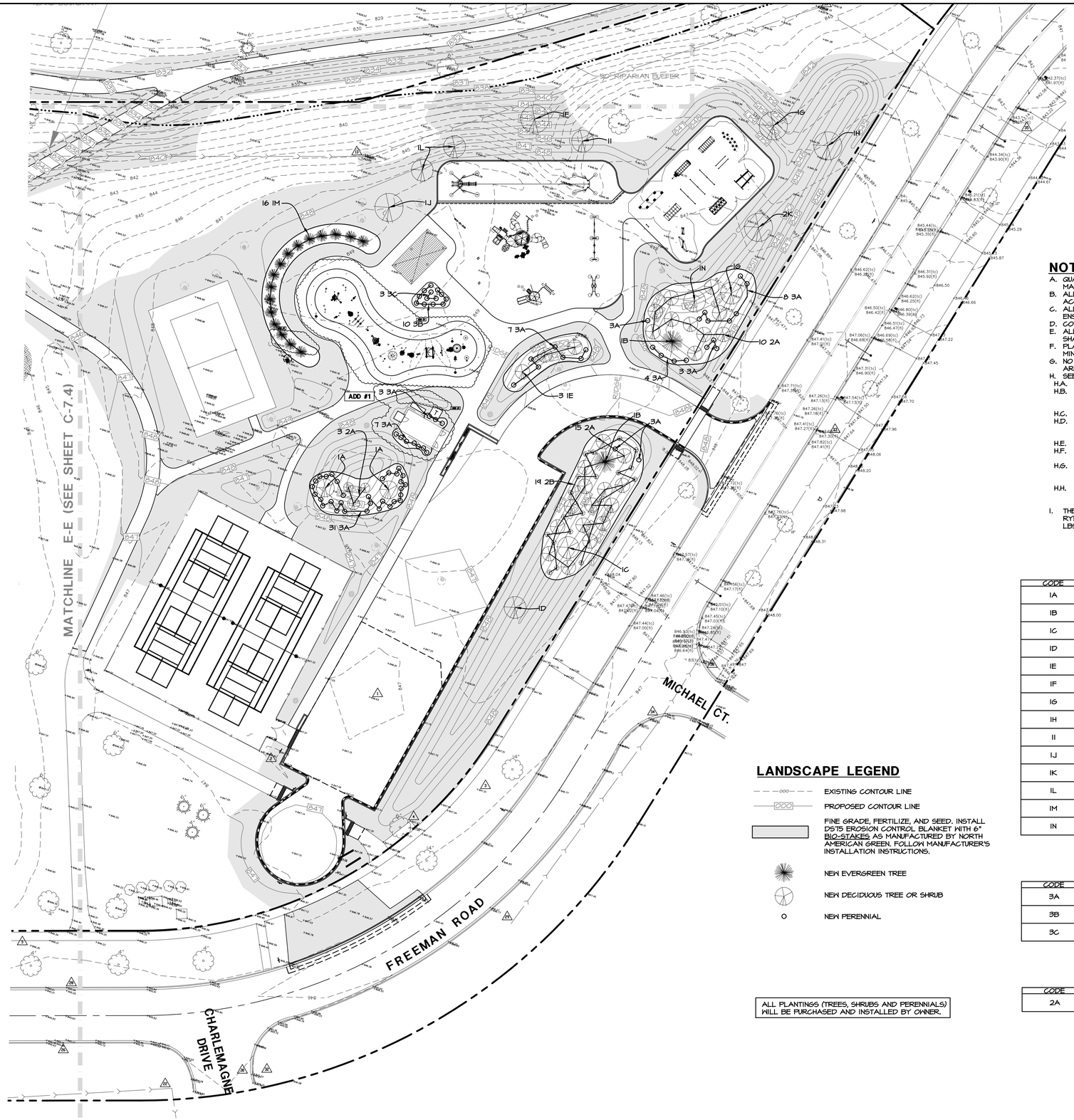

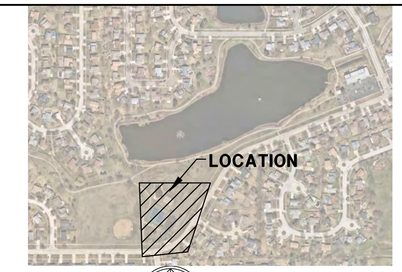

KEYMAP

SCALE: N.T.S.

NORTH

NOTES:

A. QUANTITY LISTS ARE SUPPLIED AS A CONVENIENCE. CONTRACTOR SHALL VERIFY ALL MATERIAL QUANTITIES ON SITE.
B. ALL PLANT MATERIAL TO BE NORTHERN ILLINOIS GROWN. PLANT MATERIAL TO BE GROWN IN ACCORDANCE TO THE STANDARDS SET BY THE AMERICAN ASSOCIATION OF NURSERYMAN.
C. ALL PLANTINGS SHALL BE WATERED THOROUGHLY IN THE FIRST 24 HOURS AFTER PLANTING. ENSURE ALL AIR POCKETS ARE REMOVED AROUND ROOT BALL.
D. CONTRACTOR TO GUARANTEE PLANT MATERIAL FOR ONE YEAR FROM TIME OF PLANTING.
E. ALL PLANT BED AREAS TO BE MULCHED WITH SHREDDED HARDWOOD MULCH 3" DEEP AND SHALL BE SEPARATED FROM LAWN AREAS WITH A SPADED EDGING.
F. PLANT SIZES LISTED ARE THE MINIMUM SIZE REQUIRED. PLANTS THAT DO NOT MEET THESE MINIMUM SIZES SHALL BE REJECTED AT THE CONTRACTOR EXPENSE.
G. NO PLANT SPECIES OR SIZES SHALL BE SUBSTITUTED WITH PRIOR APPROVAL FROM ARCHITECT.
H. SEED BED PREPARATION:
   - H.A. ALL STONES, ROCKS, DEBRIS LARGER THAN 1" IN DIAMETER SHALL BE REMOVED.
   - H.B. DISK OR TILL TOPSOIL TO A DEPTH OF 3" AND REDUCE ALL SOIL PARTICLES TO NO LARGER THAN 2". THE SURFACE SHALL BE FREE OF WEEDS, STONES, ROCKS, STICKS, GULLIES, CLODS, AND DEBRIS.
   - H.C. THE AREA SHALL BE FINE GRADED.
   - H.D. THE SEED SHALL BE PLACED INTO THE SOIL WITH A MACHINE THAT MECHANICALLY PLACES THE SEED IN DIRECT CONTACT WITH THE SOIL AND COVERS THE SEED WITH THE SOIL.
   - H.E. BROADCAST AND HYDROSEED WILL NOT BE ALLOWED.
   - H.F. SEEDED AREAS SHALL BE COVERED WITH THE EROSION BLANKET RIGHT AFTER THE SEED HAS BEEN SOWN.
   - H.G. ANY SOIL AMENDMENTS NEEDED TO ACHIEVE A 90% HEALTHY STAND OF VEGETATION WILL BE ADDED TO THE SOIL AT NO EXTRA CHARGE TO THE OWNER. THE STAND OF VEGETATION WILL NEED TO BE ACCEPTED BY THE ENGINEER.
   - H.H. THE LAWN SEED MIX SHALL BE KENTUCKY BLUEGRASS 100LBS/ACRE, REVENGE PERENNIAL RYEGRASS 60 LBS/ACRE, ANNUAL RYE 40 LBS/ACRE AND CREEPING RED FESCUE 40 LBS/ACRE TOTAL.
I. THE LAWN SEED MIX SHALL BE KENTUCKY BLUEGRASS 100 LBS/ACRE, REVENGE PERENNIAL RYEGRASS 60 LBS/ACRE, ANNUAL RYE 40 LBS/ACRE AND CREEPING RED FESCUE 40 LBS/ACRE TOTAL.

TREE LIST

CODE	PLANT	NAME	QTY
1A	ULMUS X PERVITOLIA FRONTIER	FRONTIER ELM	1
1B	PICEA OMORIKA	SERBIAN SPRUCE	2
1G	HALESIA CAROLINA	CAROLINA SILVERBELL	2
1D	CERCIDIPHYLLUM JAPONICUM	KATSURA	1
1E	CERCIS CANADENSIS APPALACHICAN RED	EASTERN REDBUD	3
1F	ZELKOVA SERRATA	JAPANESE ZELKOVA	1
1G	QUERCUS PALUSTRIS	SWAMP SPANISH OAK	1
1H	QUERCUS ALBA	WHITE OAK	1
1I	ACER FREMANII "ARMSTRONG"	FREEMAN MAPLE	1
1J	ACER FREMANII "AUTUMN FANTASY"	RED MAPLE TREE	1
1K	ACER PLATANOIDES "DEBORAH"	NORWAY MAPLE	1
1L	POPULOUS TREMULOIDS	QUAKING ASPEN	2
1M	THUJA OCCIDENTALIS SMARAGD	AMERICAN ARBORVITAE	30
1N	QUERCUS ROBUR X ALBA "CRIMSCHMIDT"	CRIMSON SPIRE OAK	1

PERENNIAL/GRASS LIST

CODE	PLANT	NAME	QTY
3A	HEMEROCALLIS "LITLE GRAPETTE"	DWARF DAYLILY	68
3B	LIRIOPE SPICATA	LILYTURF	29
3C	CALAMAGROSTIS BRACHYTRICHA	KOREAN FEATHER REED GRASS	3

SHRUB LIST

CODE	PLANT	NAME	QTY
2A	HYDRANGEA MACROPHYLLA	FRENCH HYDRANGEA	28

LANDSCAPE LEGEND

- EXISTING CONTOUR LINE
- PROPOSED CONTOUR LINE
- FINE GRADE, FERTILIZE, AND SEED. INSTALL DS75 EROSION CONTROL BLANKET WITH 6" BIO-STAKES AS MANUFACTURED BY NORTH AMERICAN GREEN. FOLLOW MANUFACTURER'S INSTALLATION INSTRUCTIONS.
- NEW EVERGREEN TREE
- NEW DECIDUOUS TREE OR SHRUB
- NEW PERENNIAL

ALL PLANTINGS (TREES, SHRUBS AND PERENNIALS) WILL BE PURCHASED AND INSTALLED BY OWNER.

NORTH

1" = 30'

00 15 30 60 120

AQUATIC \ CIVIL \ MECHANICAL \ ELECTRICAL \ PLUMBING \ TELECOMMUNICATION \ STRUCTURAL \ ACCESSIBILITY CONSULTING \ DESIGN & PROGRAM MANAGEMENT \ LAND SURVEY

WT GROUP
Engineering with Precision. Place and Passion.
2675 Pratum Avenue | Hoffman Estates, IL 60192
T: 224.293.0011 F: 224.293.0444
wtengineering.com
IL License No: 184.007570-0015 Expires: 04.30.2021

© COPYRIGHT 2019 THE W-T GROUP, LLC

WT Group
Engineering • Design • Consulting

SOUTH RIDGE COMMUNITY PARK
ENHANCEMENT PLAN 2019
1450 FREEMAN ROAD
HOFFMAN ESTATES, IL 60192

heparks
making life fun.

ISSUE

TO	DATE
MWRD	9/17/19
MWRD	10/22/19
VILLAGE	11/25/19
MWRD	1/2/20
SWCD	1/17/20
FOR BID	1/23/20
ADD #1	2/03/20

CHECK: CMS
DRAWN: PS
1911354C

L-1.0
LANDSCAPE PLAN

SPECIFICATIONS FOR CONSTRUCTION

1 GENERAL NOTES

1.1 THESE DESIGN DOCUMENTS WERE PREPARED BY 'VORTEX AQUATIC STRUCTURES INTERNATIONAL' FOR THE USE OF THEIR CLIENT ONLY. THE MATERIAL USED AND IDENTIFIED IN THEM REFLECTS VORTEX AQUATIC STRUCTURES INTERNATIONAL'S BEST JUDGMENT IN LIGHT OF THE INFORMATION AVAILABLE AT THE TIME OF PREPARATION. FOR THE PURPOSE OFTHESE DESIGN DOCUMENTS, 'VORTEX AQUATIC STRUCTURES INTERNATIONAL' IS SYNONYMOUS WITH 'VORTEX'.

1.2 VORTEX ACCEPTS NO RESPONSIBILITY FOR DAMAGES, IF ANY, SUFFERED BY ANY THIRD PARTY AS A RESULT OF DECISIONS MADE OR ACTIONS BASED ON THESE DESIGN DOCUMENTS WITHOUT THE PREVIOUS CONSULTATION TO VORTEX.

1.3 ALL WORK, MATERIALS AND THEIR ASSEMBLIES SHALL CONFORM TO THE STANDARDS, REGULATIONS AND CODES CURRENTLY IN FORCE FOR ALL TRADES, AISC, ACNOR, EN, OR IBC.

1.4 THESE DESIGN DOCUMENTS DO NOT INDICATE THE METHOD OR MEANS OF CONSTRUCTION. WHEN APPLICABLE, THE CONTRACTORS SHALL SUPERVISE AND DIRECT ALL THE WORKAND SHALL BE SOLELY RESPONSIBLE FOR ALL CONSTRUCTION MEANS, METHODS, PROCEDURES AND SEQUENCES AS PER STANDARD BEST PRACTICES.

1.5 DO NOT SCALE DRAWINGS.

1.6 USE ONLY THOSE MARKED "ISSUED FOR CONSTRUCTION".

1.7 THE CONTRACTOR SHALL REVIEW THESE DESIGN DOCUMENTS AND REPORT ANY CONFLICTS OR OMISSIONS TO THE VORTEX IMMEDIATELY.

1.8 TEMPORARY SUPPORTS, WHICH WILL BE REQUIRED DURING CONSTRUCTION, SUCH AS FORMWORK, BRACING, SHORING, ETC. ARE NOT SHOWN ON THESE DRAWINGS AND ARE THERESPONSIBILITY OF THE CONTRACTOR. THE CONTRACTOR IS RESPONSIBLE TO ENSURE THAT ALL SAFE CONSTRUCTION PROCEDURES ARE FOLLOWED.

1.9 THE FOLLOWING SPECIFICATIONS ARE VORTEX'S MINIMUM RECOMMENDATIONS TO OBTAIN A QUALITY PRODUCT. THE CONTRACTOR SHALL FOLLOW THE LOCAL CODES IF MORE RESTRICTIVE.

1.10 ALL SEEFLOW COMPONENTS TO BE SNUG-TIGHT ONLY. USING POWER TOOLS OR TIGHTEN HARDWARE FULLY-TENSIONED CAN PRODUCE CRACKING ON THE PLASTIC.

2 EXCAVATION

2.1 ANY SHORING OR TEMPORARY SHORING NOT SHOWN ON DRAWINGS WILL BE EXECUTED, IN A SAFE MANNER, BY THE GENERAL CONTRACTOR.

2.2 IT IS THE RESPONSIBILITY OF OTHERS TO VERIFY THE EXISTENCE OF ANY UNDERGROUND SERVICES ETC.

2.3 IF AVAILABLE, REFER TO SOIL REPORT FOR BACKFILL REQUIREMENTS. ALL BACKFILL (FOR SLAB ON GRADE, ETC.) MUST BE DONE IN ACCORDANCE WITH THE RECOMMENDATIONS OF AQUALIFIED PROFESSIONAL. USE ONLY FREE DRAINING, GRANULAR, MINERAL, INERT AND NON- REACTIVE FILL.

3 FOUNDATIONS

3.1 REFER TO SOIL REPORT FOR RECOMMENDATIONS.

3.2 ALL FOOTINGS SHALL REST ON A HOMOGENEOUS LAYER OF UNDISTURBED SOIL OR ENGINEERED BACKFILL WITH A MINIMUM ALLOWABLE BEARING CAPACITY OF 100KPA (2000 PSF) AND MAXIMUM DIFFERENTIAL SETTLEMENT OF 0.75" (19mm). ALL ORGANIC MATERIAL SHALL BE REMOVED.

3.3 IT IS THE CONTRACTOR'S RESPONSIBILITY TO ENSURE THAT THE SOIL AT ALL FOOTING LOCATIONS BE VERIFIED BY A QUALIFIED SOILS EXPERT BEFORE POURING FOOTINGS TO ENSUREFOOTINGS REST ON APPROPRIATE STRATA.

3.4 WHEN APPLICABLE, FOLLOW GEOTECHNICAL EXPERT RECOMMENDATIONS FOR ALL EXTERIOR FOOTINGS TO ENSURE FROST PROTECTION.

4 CONCRETE

4.1 ALL CONCRETE MATERIALS, PROCEDURES, TOLERANCES & WORKMANSHIP SHALL CONFORM TO THE LATEST ISSUES OF ACI-318 AND ACI 317 OR ACNOR CAN3-A23.1 & A23.2, DEPENDING ON PROJECT LOCATION.

4.2 CONCRETE THAT HAS BEEN IN THE TRUCKS LONGER THAN 2 HOURS SHALL BE REJECTED. DO NOT ADD WATER TO THE CONCRETE IN THE TRUCKS OR ON THE SITE UNDER ANY CIRCUMSTANCES.

4.3 USE MAXIMUM 76mm (3") SLUMP, 19 MM (3/4") AGGREGATE, UNLESS OTHERWISE-NOTED. USE 5-7% AIR ENTRAINMENT FOR CONCRETE EXPOSED TO WEATHER ONLY.

4.4 ALL GROUT SHALL BE NON-SHRINK TYPE WITH A MINIMUM 28 DAYS STRENGTH OF 5000 PSI (35.0 MPa). USE 1" (25mm) GROUT UNDER ALL STEEL COLUMN BASE PLATES.

4.5 CONCRETE STRENGTH @ 28 DAYS TO BE:

4.5.1 FOUNDATIONS (FOOTINGS): 25.0 MPa (3500 PSI), UNLESS OTHERWISENOTED.

4.5.2 INTERIOR SLAB ON GRADE: 25.0 MPa (3500 PSI), UNLESS OTHERWISE NOTED.

4.5.3 EXTERIOR SLAB ON GRADE: 32.0 MPa (4500 PSI), UNLESS OTHERWISE NOTED.

4.6 MINIMAL RE-BAR COVER:

4.6.1 CONCRETE POURED ON-GRADE = 76mm (3") COVER

4.6.2 CONCRETE POURED INTO FORMWORK BUT EXPOSED TO SOIL AND WEATHER FOR REBAR 15M (#4) AND UNDER = 50mm (2") COVER

5 REINFORCING STEEL

5.1 DEPENDING ON PROJECT LOCATION, ALL REINFORCING STEEL SHALL CONFORM TO ASTM A615 (BARS 15m (#4) TO BE GRADE 60 WITH SUPPLEMENTARY REQUIREMENTS ON S1. BARS SMALLER THAN 15M (#4), TO BE GRADE 40); OR TO ACNOR GRADE G30.12 [FY = 400MPA (60,000 PSI), UNLESS OTHERWISE NOTED].

5.2 USE CONCRETE, PLASTIC OR STEEL SUPPORT BARS, AS PER ACI (MANUAL OF STANDARD PRACTICE FOR DETAILING CONCRETE STRUCTURES). THE RE-BAR PLACER MUST REMAIN ON-SITE DURING POURS TO VERIFY CORRECT POSITIONING OF RE-BARS. SLANT UPPER REINFORCING STEEL IN LINE WITH THE SLOPE OF THE SLAB, IF APPLICABLE.

5.3 BARS SHALL BE SECURELY WIRED PER LATEST EDITION OF CRSI (RECOMMENDED PRACTICE FOR PLACING REINFORCING BARS).

5.4 ALL REINFORCING STEEL IS TO BE KEPT CLEAN AND FREE OF MUD, SNOW, ICE, AND ANY CONTAMINANTS.

5.5 VERTICAL AND CONTINUOUS REBAR SHALL BE LAPPED TO DEVELOP FULL TENSILE CAPACITY OF THE BAR. FOR 15m (#4) BARS MINIMUM LAP OF 610mm (24").

6 EXTERIOR / INTERIOR SLAB ON GRADE

6.1 FOLLOW THE GEOTECHNICAL EXPERT RECOMMENDATIONS FOR PREPARATION OF SOIL BEFORE POURING THE CONCRETE. ALL GRANULAR MATERIAL SHALL BE MOISTENED IMMEDIATELY BEFORE POURING THE CONCRETE. WATER AS NEEDED. DO NOT USE A VAPOR BARRIER.

6.2 NO TRUCKS ARE PERMITTED ON THE CONSTRUCTION SITE (OF THE SLAB) AFTER THE FINAL COMPACTION, EITHER BEFORE OR DURING, THE POUR.

6.3 SLAB TO BE MINIMUM 6 INCHES THICK, REINFORCED WITH 10m (#3) @ 300mm (12") C/C REBAR PLACED IN BOTH DIRECTIONS AT MID-HEIGHT OF THE SLAB, UNLESS OTHERWISE NOTED ON PLANS.

6.4 REFER TO CONCRETE SECTION FOR MINIMUM COMPRESSIVE STRENGTH AND AIR-ENTRAINMENT REQUIREMENTS.

6.5 FINISHING WILL BE MEDIUM BROOM.

6.6 CONTROL JOINTS (SAW-CUTS) TO BE LOCATED IN EACH DIRECTION, AT REGULAR INTERVALS, WITH A MAXIMUM DISTANCE OF 3m (10'). SHALL BE MINIMUM 3mm (1/8") WIDE AND SHALL PENETRATE THE SLAB TO A MINIMUM DEPTH OF 1/3 OF THE THICKNESS OF THE SLAB. CONTROL JOINTS SHOULD BE DONE AS SOON AS POSSIBLE WITHOUT DAMAGING THE CONCRETE,BUT NO LATER THAN 18 HOURS AFTER POURING.

6.7 WHEN POSSIBLE AND TO AVOID SHRINKAGE CRACKING, HUMIDITY SHALL BE MAINTAINED FOR 7 DAYS DURING THE CURING PERIOD OF THE SLAB. WATER AND USE POLYETHYLENE CLOTH OR BAG. THE CONCRETE MUST DRY UNIFORMLY.

7 CONCRETE WORK IN COLD OR HOT WEATHER (MINIMUM REQUIREMENTS)

7.1 COLD WEATHER REQUIREMENTS APPLY WHEN THE MEAN AIR IS LESS THAN 5 DEGREES CELSIUS (40 DEGREES FAHRENHEIT).

7.2 GENERAL REQUIREMENTS FOR COLD WEATHER CONCRETE WORK SHALL BE AS PER ACI 306R-88; OR AS PER THE NBC'S LATEST REQUIREMENTS INCLUDING THE LATEST ISSUE OF CSA STANDARD CAN3-A23.1.

7.3 ALL SNOW AND ICE SHALL BE REMOVED FROM FORMS AND REBAR WITH STEAM AND COMPRESSED AIR BEFORE POURING. DO NOT USE DE-ICING SALT (CALCIUM CHLORIDE) OR ANY OTHER SALTS UNDER ANY CIRCUMSTANCES.

7.4 CONCRETE SHALL HAVE A MINIMUM TEMPERATURE OF 20 DEGREES CELSIUS AND A MAXIMUM TEMPERATURE OF 25 DEGREES CELSIUS WHILE POURING. IT IS THE CONTRACTOR'S RESPONSIBILITY TO ENSURE THAT THESE REQUIREMENTS ARE SATISFIED. ANY CONCRETE THAT DOES NOT CONFORM MUST BE REJECTED.

7.5 THE SURFACE OF POURED CONCRETE SHALL BE PROTECTED BY MEANS OF SUITABLE COVERINGS AND INSULATION (TO BE DETERMINED BY TEMPERATURE) DURING THE CURING PROCESS.

7.6 GENERAL REQUIREMENTS FOR HOT WEATHER CONCRETE WORK SHALL BE AS PER ACI 305R-99; OR AS PER LOCAL CODE REQUIREMENTS.

8 PIPING

8.1 WDS CONFIGURATION ARE SCHEMATIC AND MAY BE MOVED OR ADJUSTED ON SITE BY VORTEX CERTIFIED INSTALLER TO ADJUST FOR SITE CONDITIONS

8.2 ANY REQUIRED WATER METER ON THE CITY WATER MAIN SHALL BE PROVIDED BY INSTALLER. BACKFLOW PREVENTER AND PRESSURE REGULATOR WILL BE PROVIDED BY VORTEX.

8.3 ALL PIPE LINES TO FEATURES TO HAVE A 1% MINIMUM RECOMMENDED SLOPE FOR PROPER WINTERIZATION.

8.4 ALL LINE SIZING (FEATURE CONNECTION TABLE) ASSUMES A MAXIMUM DISTANCE OF 125 FEET BETWEEN THE WATER DISTRIBUTION MANIFOLD AND THE FURTHEST PLAY PRODUCT. DISTANCES ABOVE 125 FEET MAY REQUIRE AN INCREASE IN LINE SIZING. PLEASE CONTACT VORTEX.

8.5 THE LINE DIAMETER FROM DRAIN SHALL BE 8" BASED ON THE MAXIMUM APPROXIMATE FLOW AT 1% SLOPE. FINAL LOCATION OF DRAIN AND LINE ROUTING ARE TO BE DETERMINED BY OTHERS.

8.6 PRESSURE LINES ARE RECOMMENDED TO BE SCHEDULE 80 PVC OR PEX, AND NON-PRESSURE LINES TO BE SCHEDULE 40, UNLESS OTHERWISE REQUESTED BY LOCAL CODE.

8.7 DRAINAGE LINES ARE RECOMMENDED TO BE SDR 35, UNLESS OTHERWISE REQUESTED BY LOCAL CODE.

8.8 PIPING SHOULD BE INSPECTED AFTER TRANSPORTATION FOR CUTS, SCRATCHES, GOUGES OR SPLITS; DAMAGED SECTIONS MUST BE DISCARDED OR CUT OUT.

8.9 PIPE SHALL BE INSTALLED BELOW THE FROST LEVEL NOT LESS THAN 12" (ASTM F-645) UNLESS OTHERWISE REQUESTED BY LOCAL CODE.

8.10 PIPE INSTALLATION MINIMUM COVER SHOULD BE EVALUATED ACCORDING TO ASTM D-2774, UNLESS OTHERWISE REQUESTED BY LOCAL CODE.

8.11 SPECIAL CONSIDERATIONS SHOULD BE TAKEN FOR THERMAL CONDITIONS, EXPANSION AND CONTRACTIONS DUE TO TEMPERATURE SHOULD BE EVALUATED BEFORE THE INSTALLATION BY THE CONTRACTOR.

8.12 VALVE NUMBER 1 IS LOCATED TO THE LEFT OF THE MANIFOLD FACING THE SOLENOID.

8.13 MINIMUM 50 PSI REQUIRED AT THE INLET OF THE BACKFLOW PREVENTER AND PRESSURE REGULATING DEVICE.

8.14 MAXIMUM FLOW CAPACITY OF MANIFOLD IS 144 GPM

8.15 TOTAL FLOW OF THE FEATURE IS 149.5 GPM.

8.16 FACTORY MAXIMUM SEQUENCING FLOW IS 115 GPM, ACTUAL FLOW MAY VARY DUE TO SITE CONDITIONS.

2 ELECTRICAL

9.1 WIRING FROM THE CONTROLLER TO EACH ACTIVATOR SHALL BE #22 AWG. A TOTAL OF FIVE (5) CONDUCTORS PER ACTIVATOR.CABLE LENGTH UP TO 164' (50m), PROVIDED BY VORTEX.

9.2 ALL CONNECTIONS TO THE CONTROLLER AND OTHER VORTEX ELECTRICAL PANEL SHALL BE PERFORMED USING AN APPROVED NEMA 4X CONNECTOR.

9.3 WIRE FROM MAIN POWER TO VORTEX PANEL TO BE DETERMINED BY OTHERS RESPECTING THE LOCAL CODE.

9.4 MAINTAIN A MINIMUM CLEARANCE ZONE OF 36" IN FRONT OF ELECTRICAL PANEL, UNLESS OTHERWISE REQUESTED BY LOCAL CODE.

9.5 USE #8 BARE COPPER BONDING WIRE BETWEEN FEATURES TO A GROUNDING ROD IN THE SOIL, TIED INTO REBAR GRID, OR AS PER LOCAL CODE.

9.6 AS PER ELECTRICAL CONSTRUCTION AND SAFETY CODES: CONTROLLER AND ANY OTHER ELECTRICAL EQUIPMENT BOX MUST BE HARD-WIRED TO A GROUND FAULT CIRCUIT INTERRUPTER (GFCI) FROM THE INPUT POWER SOURCE.

9.7 ALL ELECTRICAL WORK SHOULD BE PERFORMED BY A LICENCE ELECTRICIAN IN ACCORDANCE TO LOCAL ELECTRICAL CONSTRUCTION AND SAFETY CODES.

Abbreviations	
A	Architectural
C	Civil Work
P	Plumbing Layout
PD	Plumbing Details
E	Electrical Layout
ED	Electrical Details
FT	Feature Installation Drawing

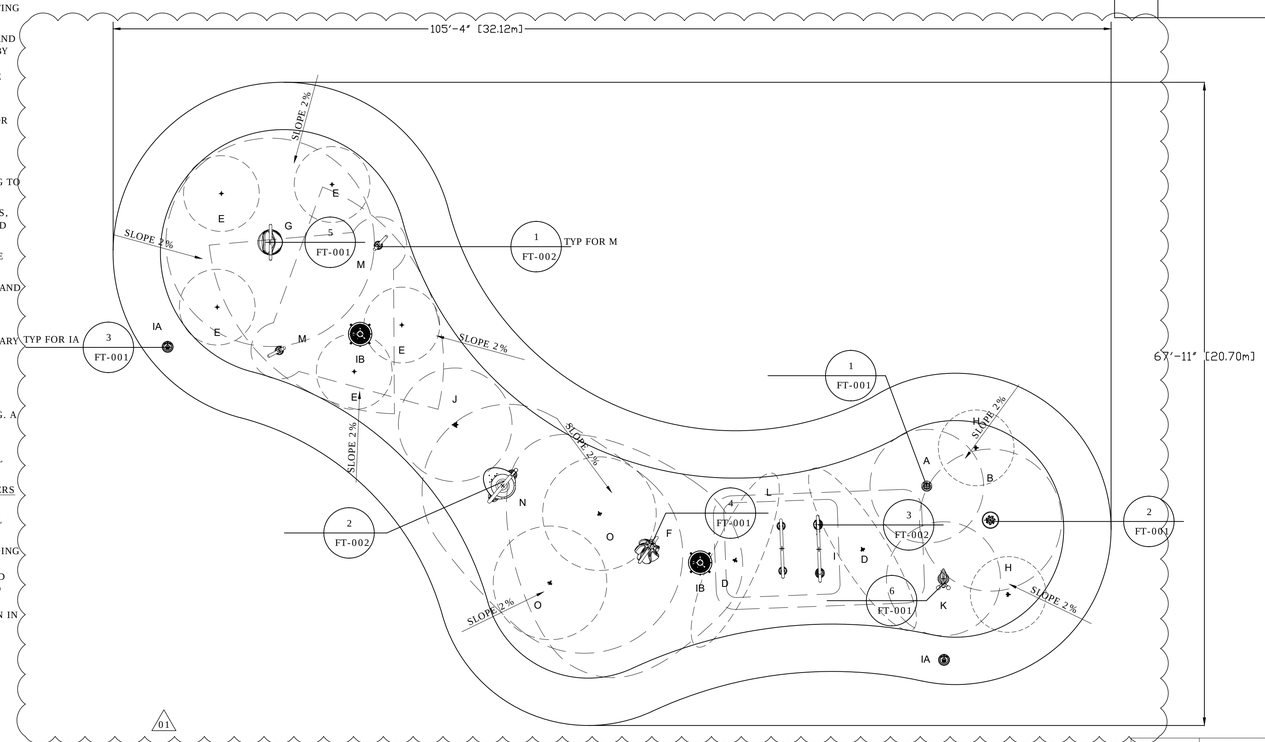

1 SPRAY ZONE & FEATURE PLAN
A-001

1. 5'[1.5M] SPRAY FREE AREA ALL AROUND THE SPLASHPAD
2. RECOMMENDED SLOPE: 2% TOWARDS DRAIN.
3. COORDINATE THESE DRAWINGS WITH ARCHITECTURAL , CIVIL, PLUMBING & ELECTRICAL SECTIONS.

SPLASHPAD DIMENSION

TOTAL AREA :	3363 ft²	312 m²
SPRAY AREA :	2020 ft²	187 m²
TOTAL FLOW :	149.5 Gpm	

PRODUCT LEGEND

REF	PRODUCT	QTY
A	Aqua Dome N°1 VOR 0555	1
B	Bobble N°1 VOR 7232	1
IA	Bollard Activator N°3 VOR 0611	2
D	Directional Jet N°2 VOR 0321	2
E	Geyser VOR 0301	5
F	Helio N°5 VOR 7240	1
G	Helio N°6 VOR 7241	1
H	Jet Stream N°1 VOR 7512	2
I	Luna N°1 VOR 7230	1
J	Side Winder VOR 7518	1
K	Snail N°4 VOR 7217	1
L	Spray Loop VOR 0519	1
M	Tube N°1 * VOR 0220	2
N	Twinsplash VOR 7242	1
O	Water Bloom N°2 VOR 0329	2
P	Playsafe Drain No. 1 VOr-1001.4000	2
	TOTAL	QTY
		26

Drawing #	Drawing Name	Rev#
A-001	Spray Zone Layout	01
A-002	Anchor Plan	01
C-001	Embed Details	00
C-002	Embed Details	00
PE-001	Plumbing & Electrical Layout	02
PD-001	Plumbing Details	00
E-001	Bonding Layout	01
ED-001	Electrical Details	00
FT-001	Features Installation Drawing	00
FT-002	Features Installation Drawing	00

VORTEX
VORTEX USA Inc.
1420 Valwood Parkway Suite 205
Carrollton, Texas
United States 75006
Toll Free: +1 (877) 586-7839
Phone: +1 (972) 410-3619

COPYRIGHT VORTEX AQUATIC STRUCTURES INTERNATIONAL-THIS DOCUMENT AND THE IDEAS, RENDERINGS AND OTHER CONTENTS CONTAINED THEREIN ARE THE SOLE PROPETY OF VORTEX AQUATIC STRUCTURES INTERNATIONAL AND MAY NOT BE DISSEMINATED, COPIED, REPRODUCED OR OTHERWISE USED WITHOUT PRIOR WRITTEN CONSENT OF VORTEX AQUATIC STRUCTURES INTERNATIONAL

South Ridge Splashpad

Project Location
Hoffman Estates, IL

Project Number
24812

Order Number

Date	Revision Description	No.	By/Par
30/Jan/2020	Re-issued for Bid	01	MM
20/Jan/2020	Issued for Bid	00	SR

Drawing Title
Spray Zone Layout

Drawn by MM
Verified by MAB
Scale 5/32":1'
Date 30/Jan/2020
Sheet # A-001

REF	PRODUCT	QTY
A	Aqua Dome N°1 VOR 0555	1
B	Bobble N°1 VOR 7232	1
IA	Bollard Activator N°3 VOR 0611	2
D	Directional Jet N°2 VOR 0321	2
E	Geyser VOR 0301	5
F	Helio N°5 VOR 7240	1
G	Helio N°6 VOR 7241	1
H	Jet Stream N°1 VOR 7512	2
I	Luna N°1 VOR 7230	1
J	Side Winder VOR 7518	1
K	Snail N°4 VOR 7217	1
L	Spray Loop VOR 0519	1
M	Tube N°1 * VOR 0220	2
N	Twinsplash VOR 7242	1
O	Water Bloom N°2 VOR 0329	2
P	Playsafe Drain No. 1 VOr-1001.4000	2
	TOTAL	QTY
		26

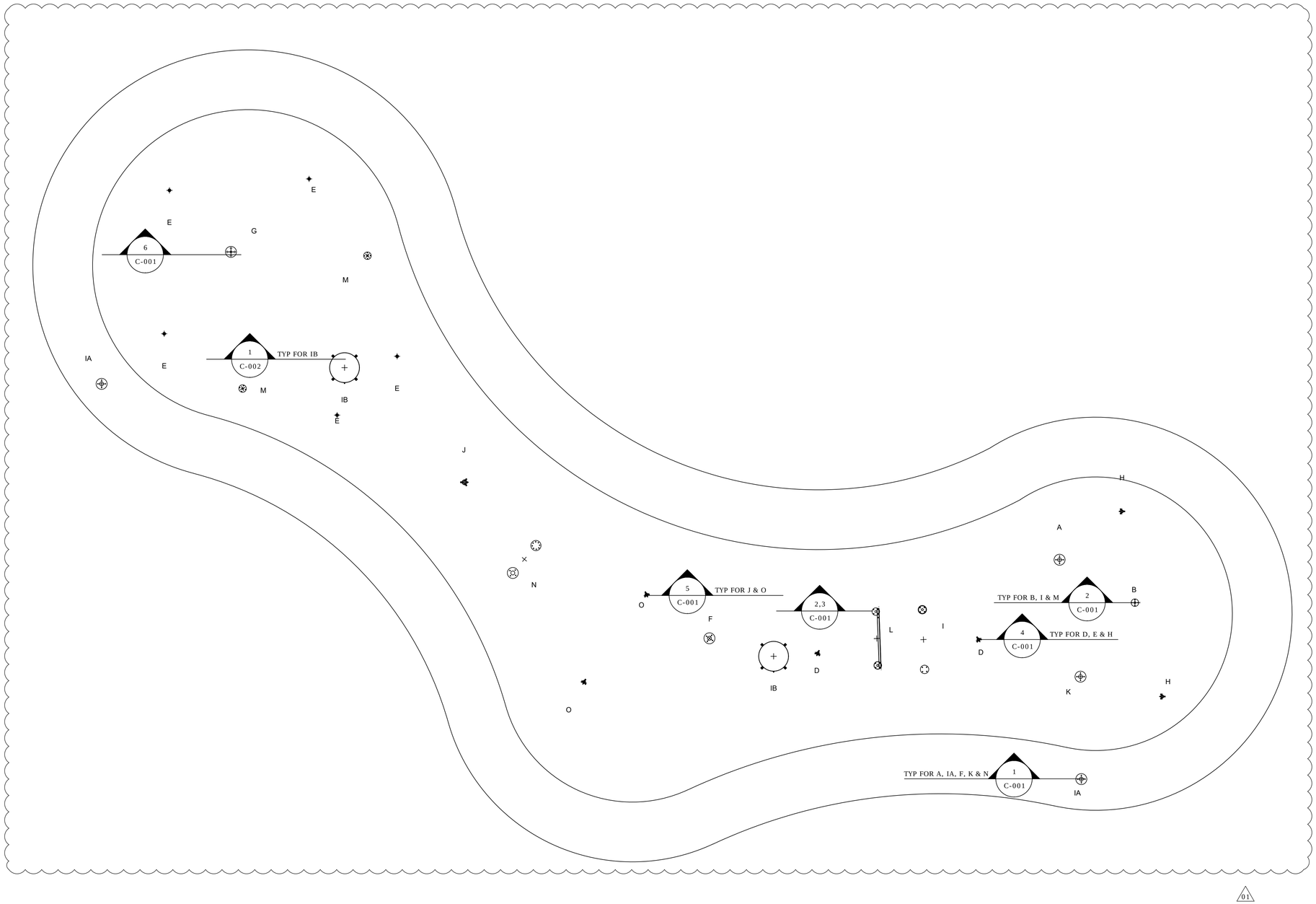

1
A-002

ANCHOR PLAN

1. REFER TO SPECIFICATIONS ON A-001
2. COORDINATE THESE DRAWINGS WITH ARCHITECTURAL, CIVIL, PLUMBING & ELECTRICAL SECTIONS.

VORTEX

VORTEX USA Inc.
1420 Valwood Parkway Suite 205
Carrollton, Texas
United States 75006
Toll Free: +1 (877) 586-7839
Phone: +1 (972) 410-3619

COPYRIGHT VORTEX AQUATIC STRUCTURES INTERNATIONAL-THIS DOCUMENT AND THE IDEAS, RENDERINGS AND OTHER CONTENTS CONTAINED THEREIN ARE THE SOLE PROPETY OF VORTEX AQUATIC STRUCTURES INTERNATIONAL AND MAY NOT BE DISSEMINATED, COPIED, REPRODUCED OR OTHERWISE USED WITHOUT PRIOR WRITTEN CONSENT OF VORTEX AQUATIC STRUCTURES INTERNATIONAL

South Ridge Splashpad

Project Location
Hoffman Estates, IL

Project Number
24812

Order Number

Date	Revision Description	No.	By/Par
30/Jan/2020	Re-issued for Bid	01	MM
20/Jan/2010	Issued for Bid	00	SR

Drawing Title
Anchor Plan

Drawn by	Verified by
MM	MAB
Scale 7/32":1'	Date 30/Jan/2020

Sheet #
A-002

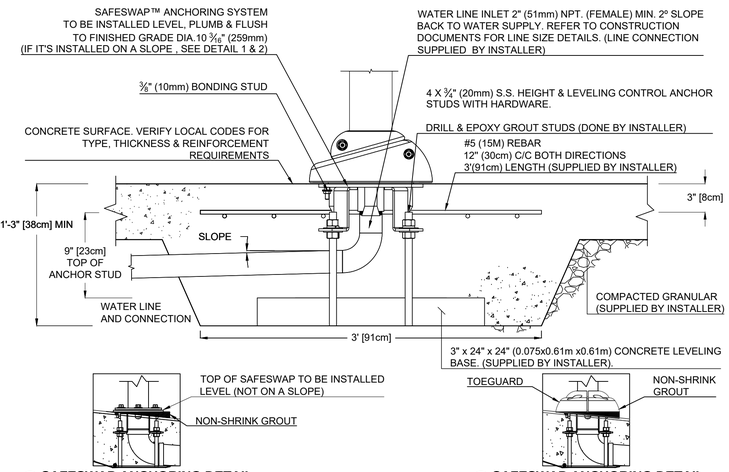

1 / C-001 **Safeswap No1 Anchor TYP.**

VOR-55000.0430

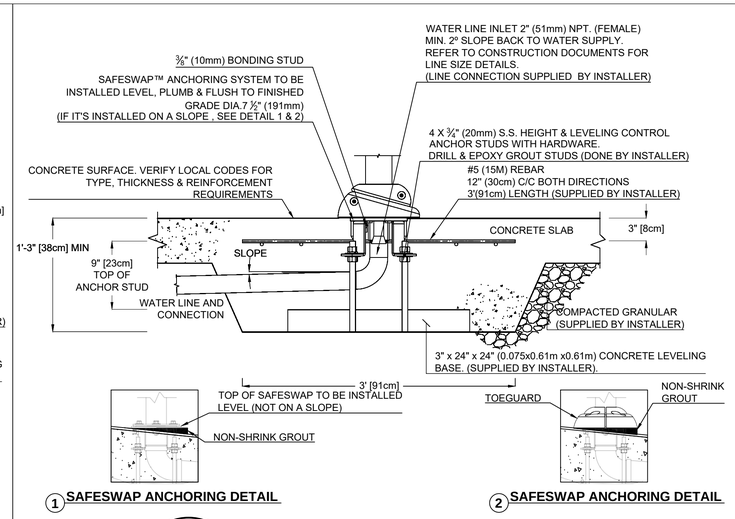

2 / C-001 **Safeswap No2 Anchor TYP.**

VOR-55000.0570

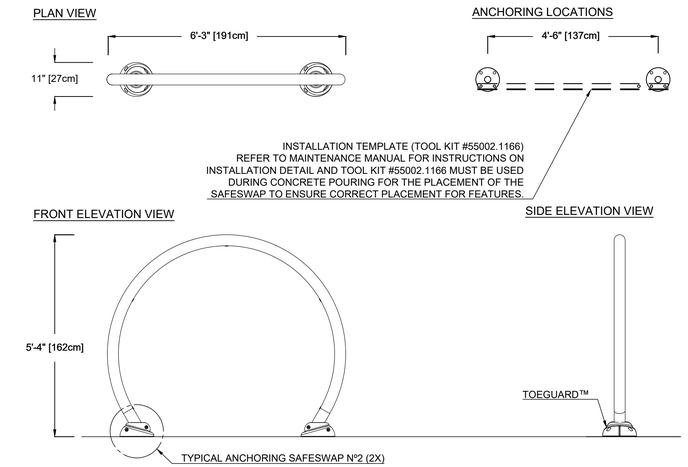

3 / C-001 **Spray Loop**

VOR-0519.2XXX

NOTE:
"BY INSTALLER/BY CONTRACTOR "MAY REFER TO SERVICE PROVIDERS OTHER THAN THE EQUIPMENT MANUFACTURER. PLEASE REFER TO PROJECT SPECIFICATION FOR DETAILS OF RESPONSIBILITY.

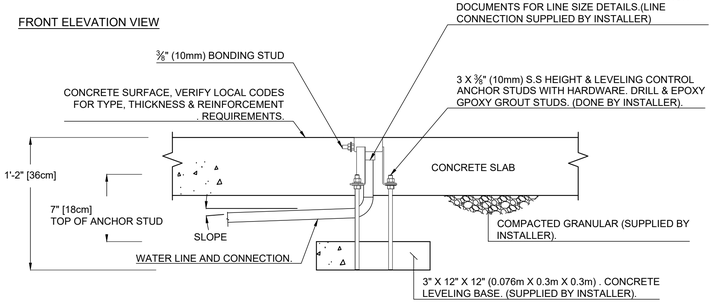

4 / C-001 **Ground Feature Anchor (3/4" Inlet)**

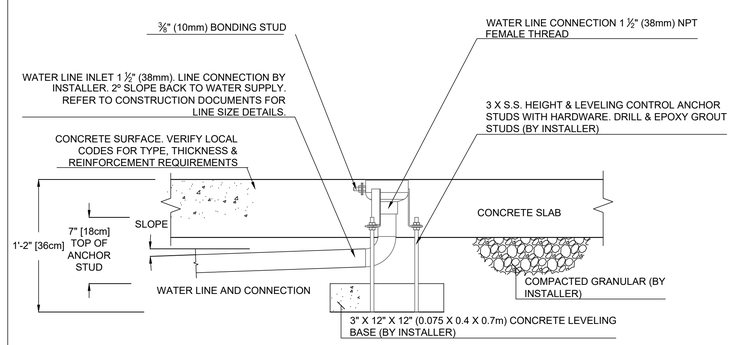

5 / C-001 **Ground Feature Anchor TYP (Inlet 1 1/2")**

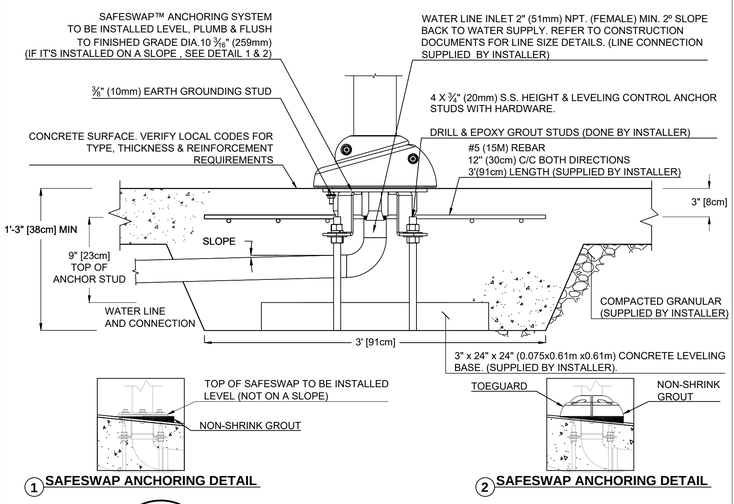

6 / C-001 **Installation Kit Safeswap No1 Anchor**

VOR-55000.0433

VORTEX

VORTEX USA Inc.
1420 Valwood Parkway Suite 205
Carrollton, Texas
United States 75006
Toll Free: +1 (877) 586-7839
Phone: +1 (972) 410-3619

COPYRIGHT VORTEX AQUATIC STRUCTURES INTERNATIONAL-THIS DOCUMENT AND THE IDEAS, RENDERINGS AND OTHER CONTENTS CONTAINED THEREIN ARE THE SOLE PROPETY OF VORTEX AQUATIC STRUCTURES INTERNATIONAL AND MAY NOT BE DISSEMINATED, COPIED, REPRODUCED OR OTHERWISE USED WITHOUT PRIOR WRITTEN CONSENT OF VORTEX AQUATIC STRUCTURES INTERNATIONAL

South Ridge Splashpad

Project Location
Hoffman Estates, IL

Project Number
24812

Order Number

Date	Revision Description	No.	By/Par
20/Jan/2020	Issued for Bid	00	SR

Drawing Title
Embed Details

Drawn by: MM
Verified by: MAB
Scale: ---
Date: 30/Jan/2020
Sheet #: C-001

PLAN VIEW

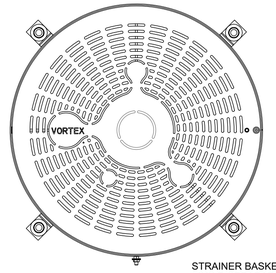

FRONT ELEVATION VIEW

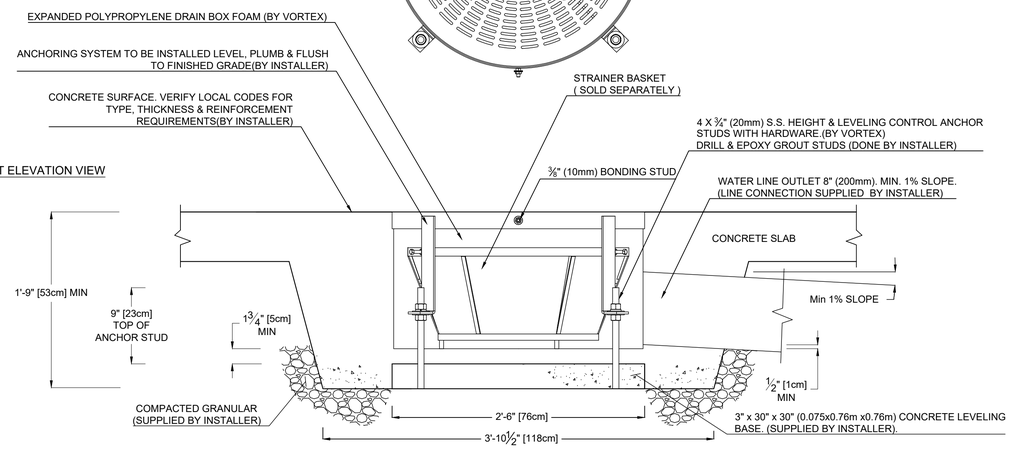

1 / C-002 Playsafe Drain No1

VOR-1001.4000

VORTEX

VORTEX USA Inc.
1420 Valwood Parkway Suite 205
Carrollton, Texas
United States 75006
Toll Free: +1 (877) 586-7839
Phone: +1 (972) 410-3619

COPYRIGHT VORTEX AQUATIC STRUCTURES INTERNATIONAL-THIS DOCUMENT AND THE IDEAS, RENDERINGS AND OTHER CONTENTS CONTAINED THEREIN ARE THE SOLE PROPETY OF VORTEX AQUATIC STRUCTURES INTERNATIONAL AND MAY NOT BE DISSEMINATED, COPIED, REPRODUCED OR OTHERWISE USED WITHOUT PRIOR WRITTEN CONSENT OF VORTEX AQUATIC STRUCTURES INTERNATIONAL

South Ridge Splashpad

Project Location
Hoffman Estates, IL

Project Number
24812

Order Number

Date	Revision Description	No.	By/Par
20/Jan/2020	Issued for Bid	00	SR

Drawing Title
Embed Details

Drawn by	Verified by
MM	MAB
Scale	Date
---	30/Jan/2020

Sheet #
C-002

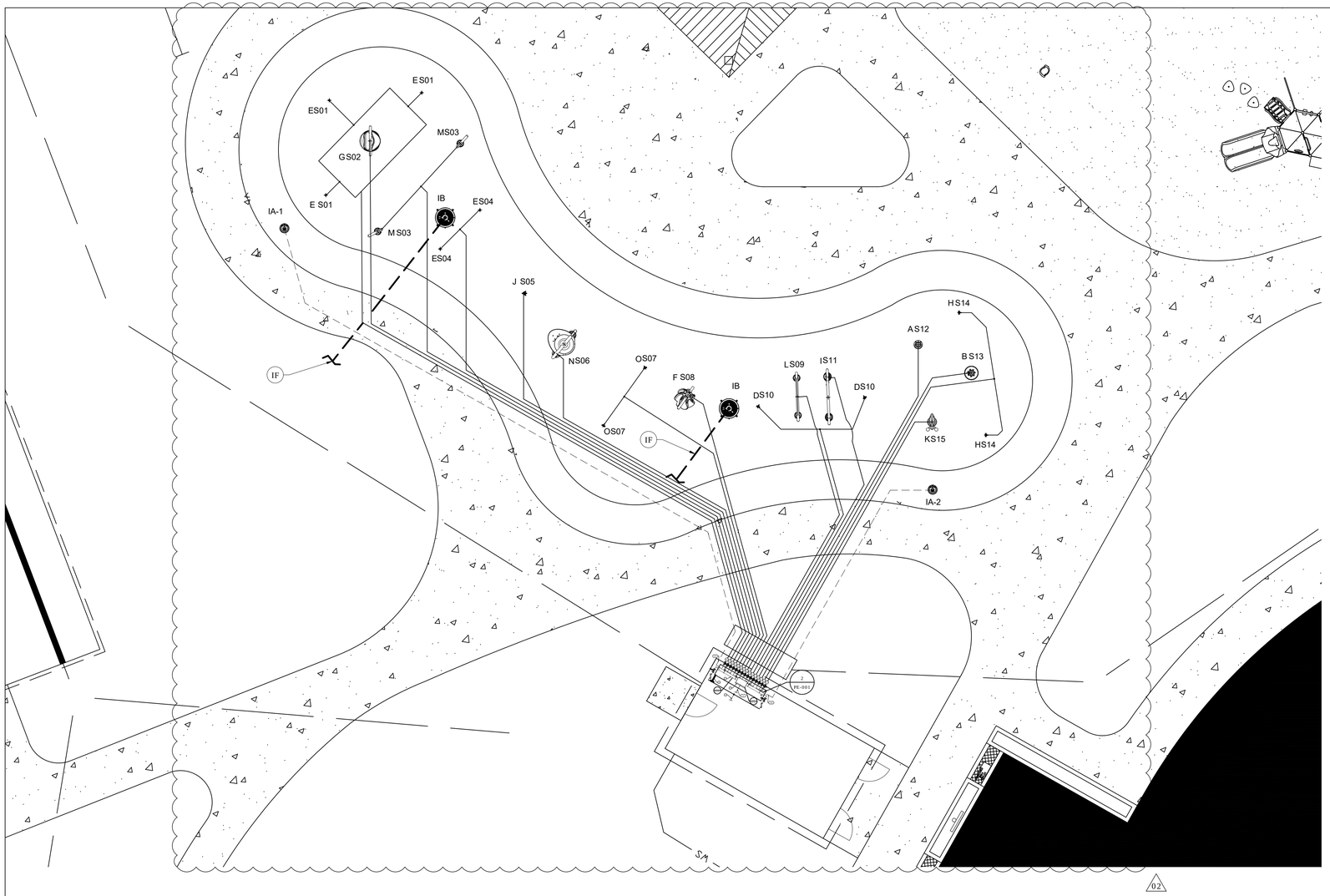

Feature Connection Table							
Manifold Output Ref.	Solenoid Valve	Feature Ref.	Feature	Qty	Line Size	Gpm	Output (ID)
S01	1 1/2" Std	E	Geyser VOR 0301	3	1 1/2"	13.5	1
S02	1 1/2" Std	G	Helio N°6 VOR 7241	1	1 1/2"	13	2
S03	1 1/2" Std	M	Tube N°1 VOR 0220	2	1 1/2"	8	3
S04	1 1/2" Std	E	Geyser VOR 0301	2	1 1/2"	9	4
S05	1 1/2" Std	J	Side Winder VOR 7518	1	1 1/2"	6.5	5
S06	1 1/2" Std	N	Twinsplash VOR 7242	1	1 1/2"	12	6
S07	1 1/2" Std	O	Water Bloom N°2 VOR 0329	2	1 1/2"	18	7
S08	1 1/2" Std	F	Helio N°5 VOR 7240	1	1 1/2"	14	8
S09	1 1/2" Std	L	Spray Loop VOR 0519	1	1 1/2"	7.5	9
S10	1 1/2" Std	D	Directional Jet N°2 VOR 0321	2	1 1/2"	3	10
S11	1 1/2" Std	I	Luna N°1 VOR 7230	1	1 1/2"	13.5	11
S12	1 1/2" Std	A	Aqua Dome N°1 VOR 0555	1	1 1/2"	14	12
S13	1 1/2" Std	B	Bobble N°1 VOR 7232	1	1 1/2"	6	13
S14	1 1/2" Std	H	Jet Stream N°1 VOR 7512	2	1 1/2"	5	14
S15	1 1/2" Std	K	Snail N°4 VOR 7217	1	1 1/2"	6.5	15

02

Electrical Line Connections Power					
Procuct Code	From	To	# Conductors	Gauge/ Type	Note
PA	Main Power Line (by Owner)	ID-120VAC	3	N/A	120V, 1 Phase, 60Hz, 10Amps Breaker Recommended ± 10% Voltage Drop is Acceptable (by Installer)

Electrical Line Connections Controller Outputs					
Procuct Code	From	To	# Conductors	Gauge/ Type	Note
EIA	ID-Input 1	IA-1	5	22	Bollard Activator No. 1 24VAC, Max 250 mA, 164' Long Cable (by Vortex)
EIB	ID-Input 2	IA-2	5	22	Bollard Activator No. 1 24VAC, Max 250 mA, 164' Long Cable (by Vortex)

Product Legend		
Product Ref.	Product	Qty
IA	Bollard Activator No3 VOR-611	2
IB	Playsafe Drain No1 VOR-1001.4000	2
IC	Water Distribution System; EMM 24812D2001R00	1
ID	Maestro Controller 16 out/ 8 in	1
IE	3" City Water Line @ 50PSI (by Installer)	1
IF	8" Line to Municipal Drain (by other)	2
IG	4" TYP Drain Line With Strainer Connected to Drainage System. Ensure P-Trap is Below Frost Line to Prevent Freezing. (by Installer)	1
	Pressure Regulator (by Vortex)	2
	Backflow Preventer (by Vortex)	2
	Solenoid Valve 1 $\frac{1}{2}$"	15

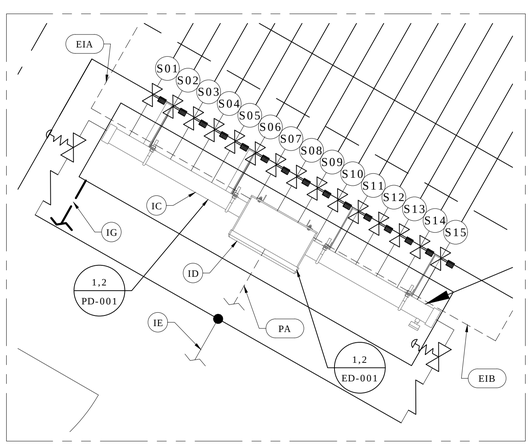

1 PE-001 PLUMBING & ELECTRICAL LAYOUT

SCALE: 1/8"=1'-0"

1. RECOMMENDED SLOPE: 2% TOWARDS DRAIN.
2. COORDINATE THESE DRAWINGS WITH ARCHITECTURAL , CIVIL, PLUMBING & ELECTRICAL SECTIONS.

WATER LINE
DRAIN LINE
ELECTRICAL LINE

2 PE-001 PLUMBING & ELECTRICAL LAYOUT

SCALE: 3/4"=1'-0"

VORTEX

VORTEX USA Inc.
1420 Valwood Parkway Suite 205
Carrollton, Texas
United States 75006
Toll Free: +1 (877) 586-7839
Phone: +1 (972) 410-3619

COPYRIGHT VORTEX AQUATIC STRUCTURES INTERNATIONAL-THIS DOCUMENT AND THE IDEAS, RENDERINGS AND OTHER CONTENTS CONTAINED THEREIN ARE THE SOLE PROPETY OF VORTEX AQUATIC STRUCTURES INTERNATIONAL AND MAY NOT BE DISSEMINATED, COPIED, REPRODUCED OR OTHERWISE USED WITHOUT PRIOR WRITTEN CONSENT OF VORTEX AQUATIC STRUCTURES INTERNATIONAL

South Ridge Splashpad

Project Location
Hoffman Estates, IL

Project Number
24812

Order Number

Date	Revision Description	No.	By/Par
30/Jan/2020	Re-issued for Bid	02	MM
20/Jan/2020	Issued for Bid	01	SR
17/Jan/2020	Issued for Approval	00	SR

Drawing Title
Plumbing & Electrical Layout

Drawn by	Verified by
MM	MAB
Scale	Date
---	30/Jan/2020

Sheet #
PE-001

THIS SHEET COVERS ALL THE MANIFOLD RANGE
WITH INTERVAL OF 5 VALVES

NOTE:

1. SEE PIPING AND ELECTRICAL SCHEMATIC DETAIL.
2. REFER TO SPECIFICATION FOR ADDITIONAL INFORMATION.
3. IF CONTROLLER IS REMOTE LOCATED, CONDUCTORS # 18 AWG AT 10' LONG PROVIDED FOR THE CONTROLLER BY VORTEX. FOR QUANTITY SEE PIPING AND ELECTRICAL SCHEMATIC DETAIL.
4. WATER OUTLETS ARE FEMALE NPT CONNECTIONS.
5. BY INSTALLER/BY CONTRACTOR MAY REFER TO SERVICE PROVIDERS OTHER THAN THE EQUIPMENT MANUFACTURER.PLEASE REFER TO PROJECT SPECIFICATION FOR DETAILS OF RESPONSIBILITY.

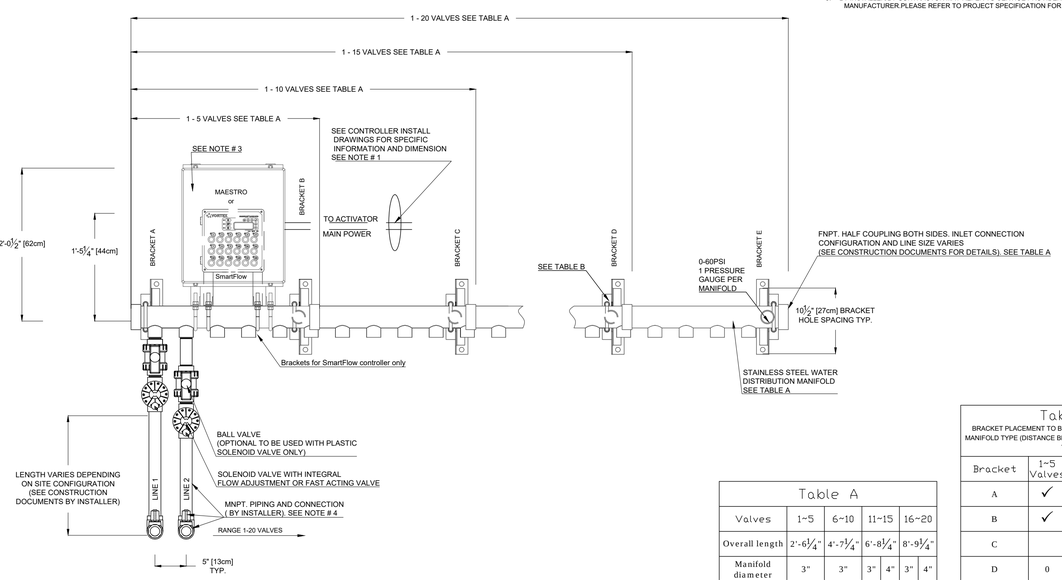

Table A												
Valves	1-5		6-10			11-15			16-20			
Overall length	2'-6¼"		4'-7¼"			6'-8¼"			8'-9¼"			
Manifold diameter	3"		3"			3"	4"		3"		4"	
Inlet diameter	2"	3"	2"	3"	2"	3"	4"	2"	3"		4"	

Table B BRACKET PLACEMENT TO BE SELECTED WITH RESPECT TO MANIFOLD TYPE (DISTANCE BETWEEN BRACKETS : 2'-1" (640mm) TYP.)				
Bracket	1-5 Valves	6-10 Valves	11-15 Valves	16-20 Valves
A	✓	✓	✓	✓
B	✓			
C		✓	✓	✓
D	0	0	✓	0
E	0	0	0	✓

1
PD-001

WALL MOUNTED COMMAND CENTER WITH INTERVAL OF 5 VALVES POSITIONS , MAESTRO CONTROLLER

D800.0000R01

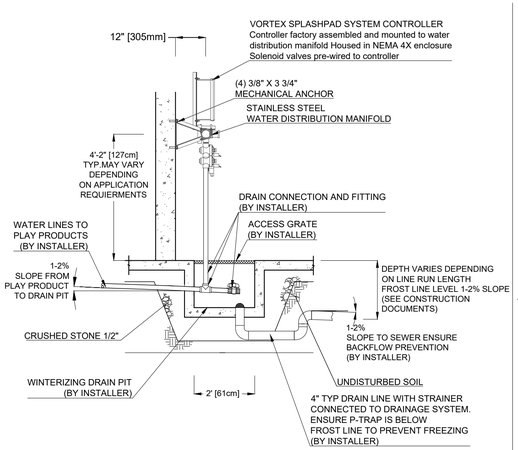

TYPICAL WINTERIZING DRAINAGE CONFIGURATION LAYOUT

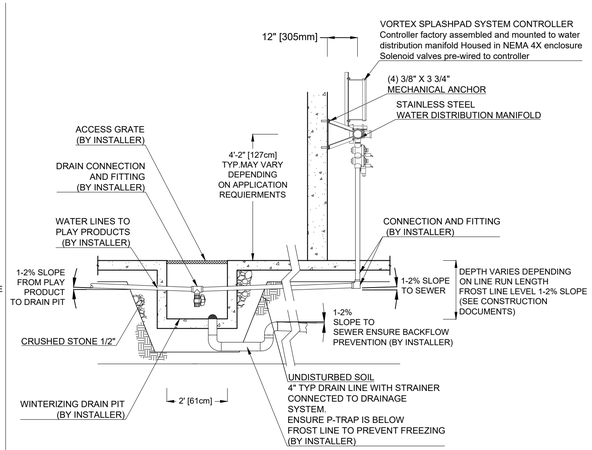

ALTERNATE WINTERIZING DRAINAGE CONFIGURATION LAYOUT

2
PD-001

WALL MOUNTED COMMAND CENTER WITH INTERVAL OF 5 VALVES POSITIONS , MAESTRO CONTROLLER

D800.0000R01

VORTEX USA Inc.
1420 Valwood Parkway Suite 205
Carrollton, Texas
United States 75006
Toll Free: +1 (877) 586-7839
Phone: +1 (972) 410-3619

COPYRIGHT VORTEX AQUATIC STRUCTURES INTERNATIONAL-THIS DOCUMENT AND THE IDEAS, RENDERINGS AND OTHER CONTENTS CONTAINED THEREIN ARE THE SOLE PROPETY OF VORTEX AQUATIC STRUCTURES INTERNATIONAL AND MAY NOT BE DISSEMINATED, COPIED, REPRODUCED OR OTHERWISE USED WITHOUT PRIOR WRITTEN CONSENT OF VORTEX AQUATIC STRUCTURES INTERNATIONAL

South Ridge Splashpad

Project Location
Hoffman Estates, IL

Project Number
24812

Order Number

Date	Revision Description	No.	By/Par
20/Jan/2020	Issued for Bid	00	SR

Drawing Title
Plumbing Details

Drawn by	Verified by
MM	MAB
Scale	Date
---	30/Jan/2020

Sheet #
PD-001

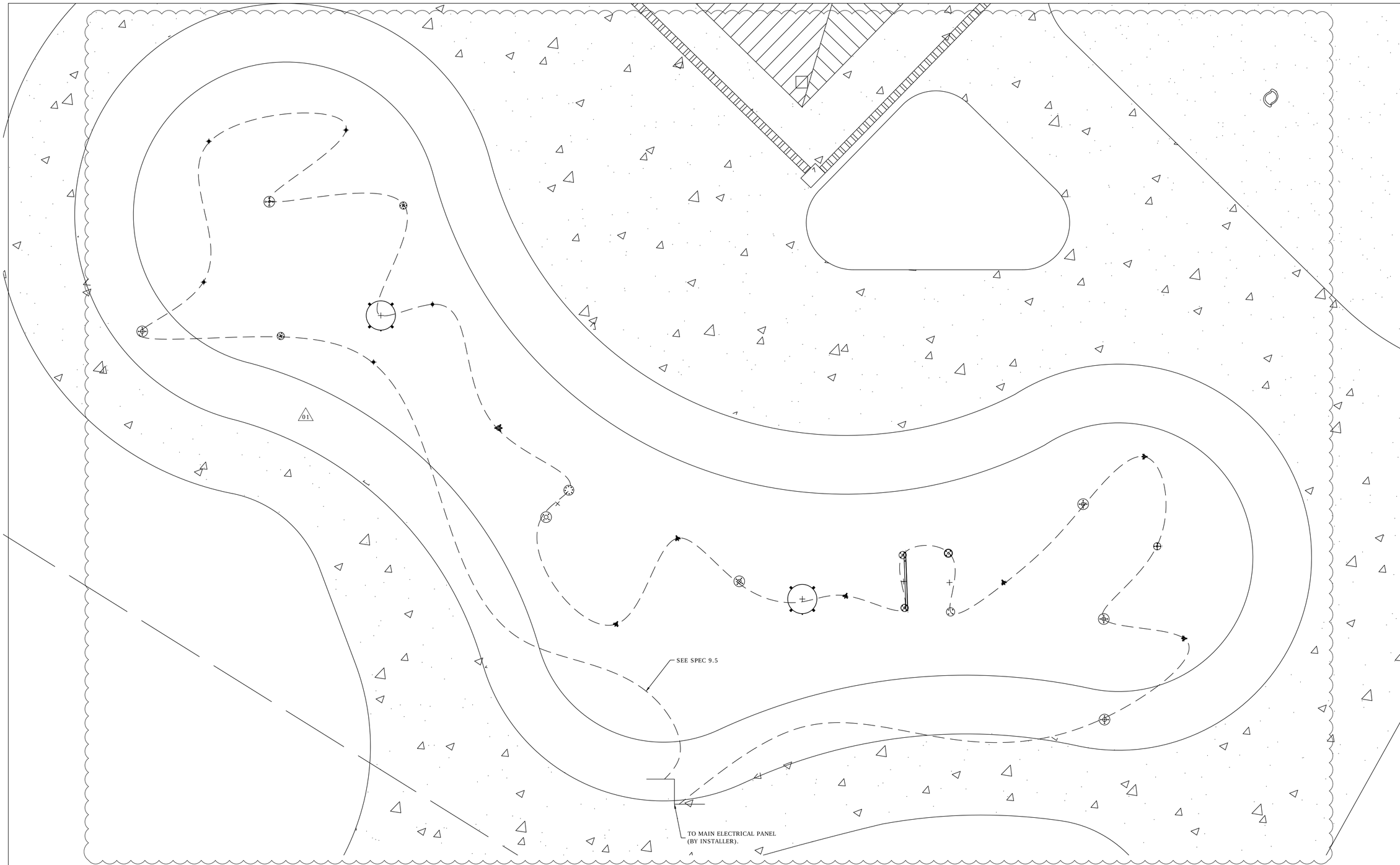

1
E-001

BONDING LAYOUT

1. REFER TO SPECS ON A-001
2. COORDINATE THIS DRAWING WITH ARCHITECTURAL, CIVIL, PLUMBING & ELECTRICAL.

Bonding wire - - - - - - - - - - - - - -

VORTEX

VORTEX USA Inc.
1420 Valwood Parkway Suite 205
Carrollton, Texas
United States 75006
Toll Free: +1 (877) 586-7839
Phone: +1 (972) 410-3619

COPYRIGHT VORTEX AQUATIC STRUCTURES INTERNATIONAL-THIS DOCUMENT AND THE IDEAS, RENDERINGS AND OTHER CONTENTS CONTAINED THEREIN ARE THE SOLE PROPETY OF VORTEX AQUATIC STRUCTURES INTERNATIONAL AND MAY NOT BE DISSEMINATED, COPIED, REPRODUCED OR OTHERWISE USED WITHOUT PRIOR WRITTEN CONSENT OF VORTEX AQUATIC STRUCTURES INTERNATIONAL

South Ridge Splashpad

Project Location
Hoffman Estates, IL

Project Number
24812

Order Number

Date	Revision Description	No.	By/Par
30/Jan/2020	Re-issued for Bid	01	MM
20/Jan/2020	Issued for Bid	00	SR

Drawing Title
Bonding Layout

Drawn by	Verified by
MM	MAB
Scale	Date
1/4":1'	30/Jan/2020

Sheet #
E-001

DIMENSIONS

NOTE:
1 - ENSURE ENOUGH CLEARANCE FOR THE DOOR OPENING

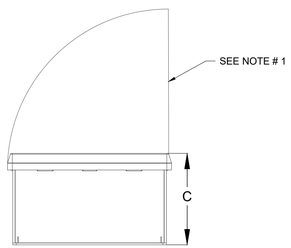

REFER TO THE PIPING AND ELECTRICAL SHEET FOR THE CONTROLLER NUMBER

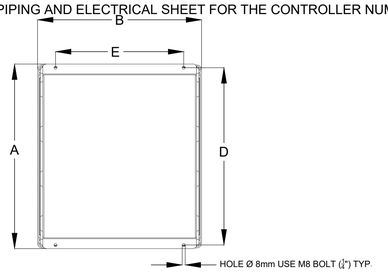

MAESTRO ENCLOSURE DIMENSIONS

	# CTRL	A" (mm)	B" (mm)	C" (mm)	D" (mm)	E" (mm)
Main MAESTRO	Water reuse					
	33907.0000	17.5 (445)	15.3 (389)	8 (208)	16.8 (425.5)	12 (305)
	33907.0001	17.5 (445)	15.3 (389)	8 (208)	16.8 (425.5)	12 (305)
	33907.0060	17.5 (445)	15.3 (389)	8 (208)	16.8 (425.5)	12 (305)
	33907.0061	17.5 (445)	15.3 (389)	8 (208)	16.8 (425.5)	12 (305)
	33907.0070	19.5 (495)	17.3 (440)	9.6 (243)	18.7 (475)	12 (305)
	33907.0071	19.5 (495)	17.3 (440)	9.6 (243)	18.7 (475)	12 (305)
	33907.0080	19.5 (495)	17.3 (440)	9.6 (243)	18.7 (475)	12 (305)
	33907.0081	19.5 (495)	17.3 (440)	9.6 (243)	18.7 (475)	12 (305)
	Water recirculation / WQMS					
	33907.1060	17.5 (445)	15.3 (389)	8 (208)	16.8 (425.5)	12 (305)
	33907.1061	17.5 (445)	15.3 (389)	8 (208)	16.8 (425.5)	12 (305)
	33907.1070	19.5 (495)	17.3 (440)	9.6 (243)	18.7 (475)	12 (305)
	33907.1071	19.5 (495)	17.3 (440)	9.6 (243)	18.7 (475)	12 (305)
	33907.1080	19.5 (495)	17.3 (440)	9.6 (243)	18.7 (475)	12 (305)
	33907.1081	19.5 (495)	17.3 (440)	9.6 (243)	18.7 (475)	12 (305)
	33907.10A0	19.5 (495)	17.3 (440)	9.6 (243)	18.7 (475)	12 (305)
	33907.10A1	19.5 (495)	17.3 (440)	9.6 (243)	18.7 (475)	12 (305)
	Fast acting valves					
	33907.1150	19.5 (495)	17.3 (440)	9.6 (243)	18.7 (475)	12 (305)
	33907.1151	19.5 (495)	17.3 (440)	9.6 (243)	18.7 (475)	12 (305)
Expansion MAESTRO	Standard					
	33907.2010	17.5 (445)	15.3 (389)	8 (208)	16.8 (425.5)	12 (305)
	33907.2011	17.5 (445)	15.3 (389)	8 (208)	16.8 (425.5)	12 (305)
	Fast acting valves					
	33907.2110	19.5 (495)	17.3 (440)	9.6 (243)	18.7 (475)	12 (305)
	33907.2111	19.5 (495)	17.3 (440)	9.6 (243)	18.7 (475)	12 (305)
	33907.2120	19.5 (495)	17.3 (440)	9.6 (243)	18.7 (475)	12 (305)
	33907.2121	19.5 (495)	17.3 (440)	9.6 (243)	18.7 (475)	12 (305)
	33907.2130	19.5 (495)	17.3 (440)	9.6 (243)	18.7 (475)	12 (305)
	33907.2131	19.5 (495)	17.3 (440)	9.6 (243)	18.7 (475)	12 (305)

1 / ED-001 Maestro Controller
16 out / 8in

33907.0XXX & 33907.1XXX CONNECTIONS

NOTE:
1 - A MAXIMUM OF 4 ETHERNET CAT6 CONNECTIONS ARE AVAILABLE PER MAESTRO.
IF MORE CONNECTIONS ARE NEEDED, THEN IT REQUIRES A ETH EXPANSION MODULE (SOLD SEPARATELY).
2 - QUANTITY OF CONNECTORs MAY VARY BASED ON MAESTRO SIZE OUTPUT CONTROL: 24 VAC MAX 1A SUPPLIED BY MAESTRO.
3 - FOR ANY INPUT, 24 VAC 250mA MAX SUPPLIED BY MAESTRO. REFER TO THE CORRESPONDING SCHEMATIC DRAWING MANUAL FOR WIRING DETAILS.
4 - MAESTRO EQUIPMENTS ON 99.99.99.X SUBNET. 99.99.99.5 MUST BE USED FOR THE ROUTER LOCATED BETWEEN VORTEX LAN NETWORK AND THE WAN NETWORK PROVIDING INTERNET. REFER TO MAESTRO USER GUIDE MANUAL FOR MORE INFORMATION.
5 - FOR POWER REQUIREMENTS, REFER TO SCHEMATIC DRAWING OF CORRESPONDING MAESTRO.
6- IF MULTIPLE MAESTRO SLAVES REQUIRED, EACH UNIT REQUIRES AN INDIVIDUAL ETHERNET CABLE CONNECTION TO THE MASTER MAESTRO
7- WATER TIGHT CONNECTIONS WITH MAESTRO DONE BY INSTALLER.
8- AS PER ELECTRICAL CONSTRUCTION AND SAFETY CODES:CONTROLLER AND/OR LED POWER PANELS AND/OR ANY OTHER ELECTRICAL EQUIPMENT MUST BE HARD-WIRED TO A GROUND FAULT CIRCUIT INTERRUPTER(GFCI)FROM THE INPUT POWER SOURCE.ALL ELECTRICAL WORK SHOULD BE PERFORMED BY A LICENCE ELECTRICIAN IN ACCORDANCE TO LOCAL ELECTRICAL CONSTRUCTION AND SAFETY CODES.

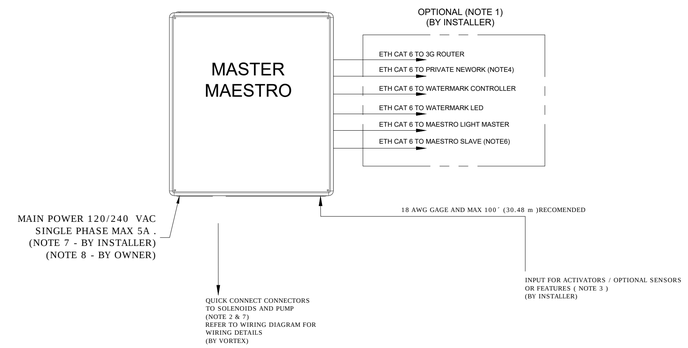

2 / ED-001 Maestro Controller
16 out / 8in

VORTEX
VORTEX USA Inc.
1420 Valwood Parkway Suite 205
Carrollton, Texas
United States 75006
Toll Free: +1 (877) 586-7839
Phone: +1 (972) 410-3619

COPYRIGHT VORTEX AQUATIC STRUCTURES INTERNATIONAL-THIS DOCUMENT AND THE IDEAS, RENDERINGS AND OTHER CONTENTS CONTAINED THEREIN ARE THE SOLE PROPETY OF VORTEX AQUATIC STRUCTURES INTERNATIONAL AND MAY NOT BE DISSEMINATED, COPIED, REPRODUCED OR OTHERWISE USED WITHOUT PRIOR WRITTEN CONSENT OF VORTEX AQUATIC STRUCTURES INTERNATIONAL

South Ridge Splashpad

Project Location
Hoffman Estates, IL

Project Number
24812

Order Number

Date	Revision Description	No.	By/Par
20/Jan/2020	Issued for Bid	00	SR

Drawing Title
Electrical Details

Drawn by	Verified by
MM	MAB
Scale	Date
---	30/Jan/2020

Sheet #
ED-001

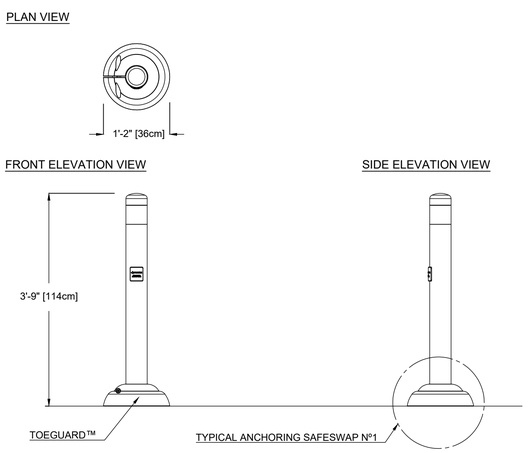

1 / FT-001 **Aqua Dome No1**
VOR-0555.2XXX

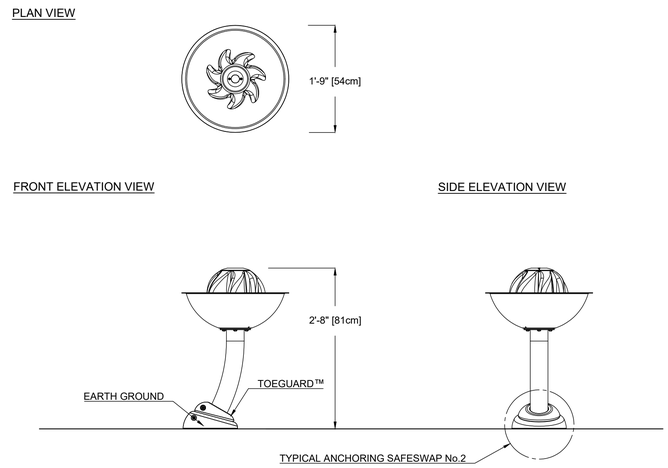

2 / FT-001 **Bobble No1**
VOR-7232.2XXX

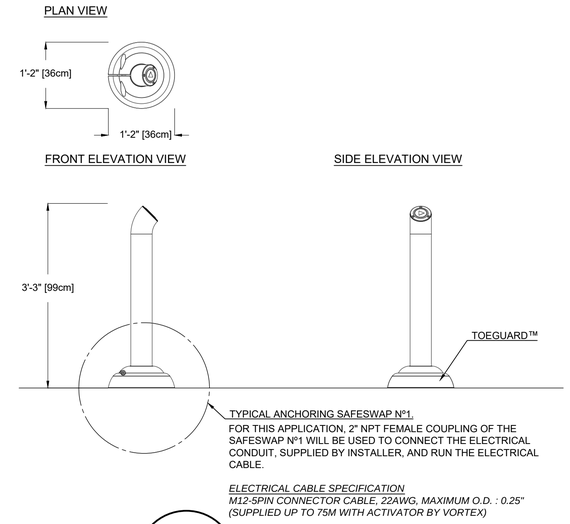

3 / FT-001 **Bollard Activator No3**
VOR-611.2008

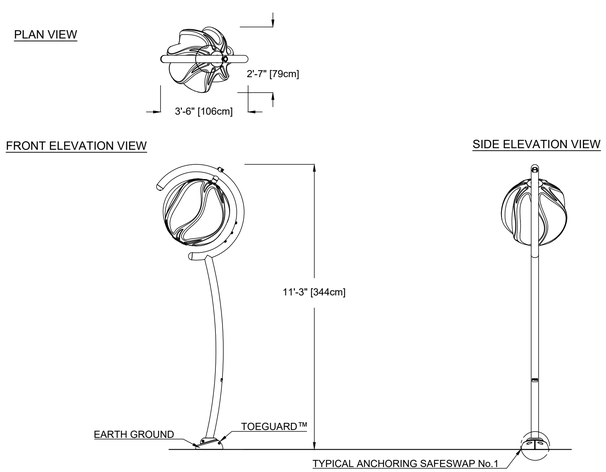

4 / FT-001 **Helio No.5**
VOR-7240.2XXX

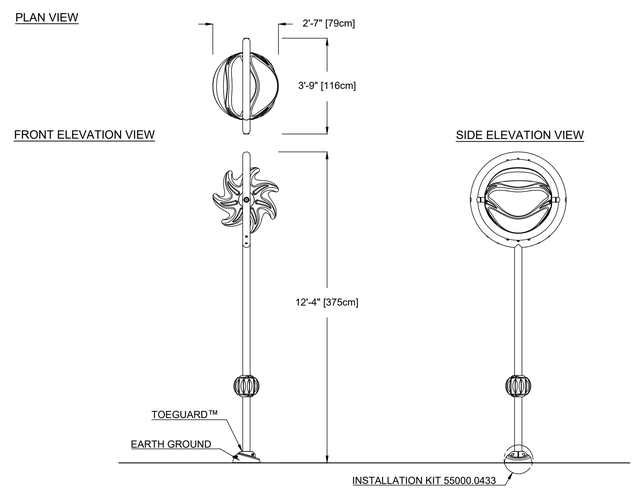

5 / FT-001 **Helio No.6**
VOR-7241.2XXX

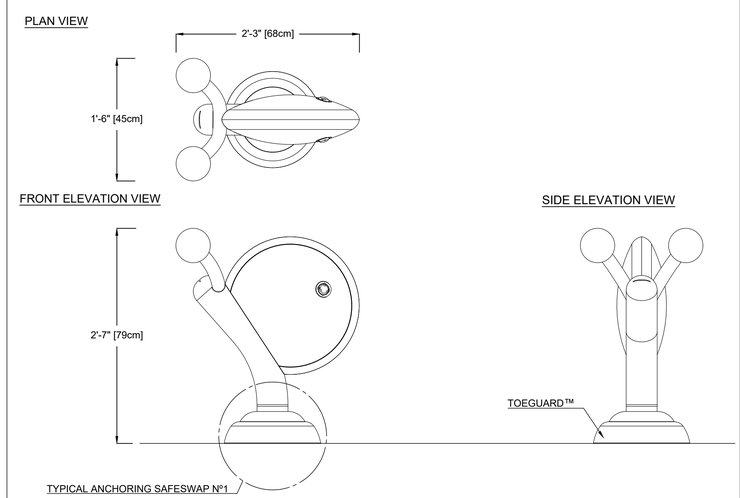

6 / FT-001 **Snail No4**
VOR-7217.2XXX

VORTEX
VORTEX USA Inc.
1420 Valwood Parkway Suite 205
Carrollton, Texas
United States 75006
Toll Free: +1 (877) 586-7839
Phone: +1 (972) 410-3619

COPYRIGHT VORTEX AQUATIC STRUCTURES INTERNATIONAL-THIS DOCUMENT AND THE IDEAS, RENDERINGS AND OTHER CONTENTS CONTAINED THEREIN ARE THE SOLE PROPETY OF VORTEX AQUATIC STRUCTURES INTERNATIONAL AND MAY NOT BE DISSEMINATED, COPIED, REPRODUCED OR OTHERWISE USED WITHOUT PRIOR WRITTEN CONSENT OF VORTEX AQUATIC STRUCTURES INTERNATIONAL

South Ridge Splashpad

Project Location
Hoffman Estates, IL

Project Number
24812

Order Number

Date	Revision Description	No.	By/Par
20/Jan/2020	Issued for Bid	00	SR

Drawing Title
Feature Installation Drawing

Drawn by	Verified by
MM	MAB
Scale	Date
---	30/Jan/2020

Sheet #
FT-001

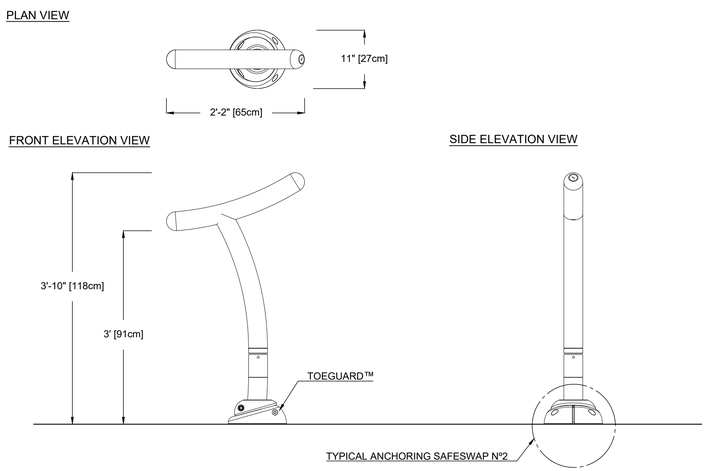

1 FT-002 Tube No1
VOR-0220.2XXX

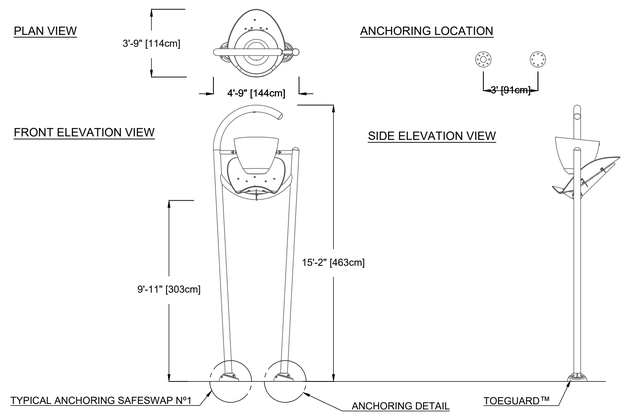

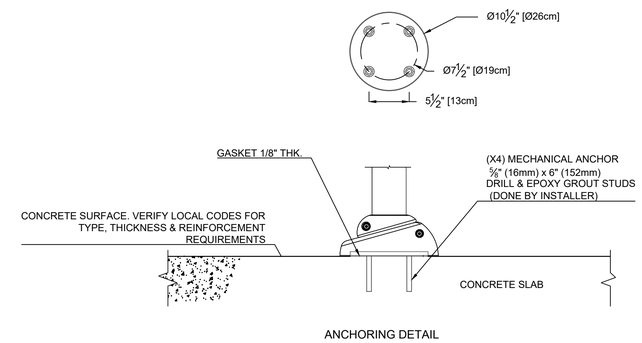

2 FT-002 Twinsplash
VOR-7242.2XXX

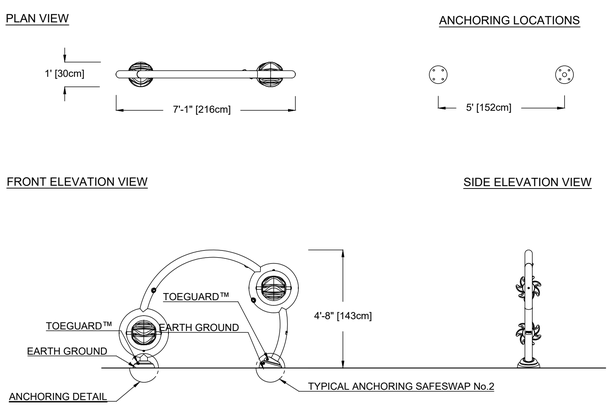

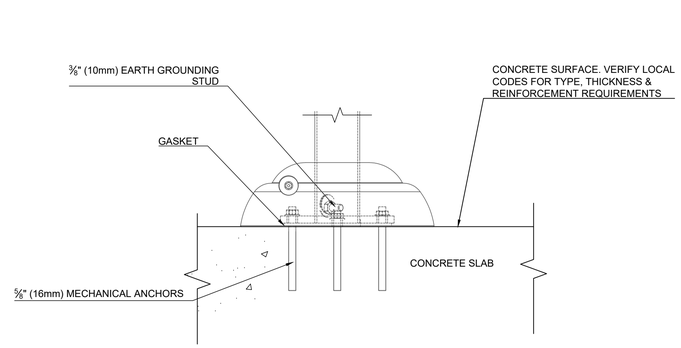

3 FT-002 Lune No1
VOR-7230.2XXX

VORTEX
VORTEX USA Inc.
1420 Valwood Parkway Suite 205
Carrollton, Texas
United States 75006
Toll Free: +1 (877) 586-7839
Phone: +1 (972) 410-3619

COPYRIGHT VORTEX AQUATIC STRUCTURES INTERNATIONAL-THIS DOCUMENT AND THE IDEAS, RENDERINGS AND OTHER CONTENTS CONTAINED THEREIN ARE THE SOLE PROPETY OF VORTEX AQUATIC STRUCTURES INTERNATIONAL AND MAY NOT BE DISSEMINATED, COPIED, REPRODUCED OR OTHERWISE USED WITHOUT PRIOR WRITTEN CONSENT OF VORTEX AQUATIC STRUCTURES INTERNATIONAL

South Ridge Splashpad

Project Location
Hoffman Estates, IL

Project Number
24812

Order Number

Date	Revision Description	No.	By/Par
20/Jan/2020	Issued for Bid	00	SR

Drawing Title
Feature Installation Drawing

Drawn by: MM
Verified by: MAB
Scale: ---
Date: 30/Jan/2020
Sheet #: FT-002